VOLUME - II: TECHNICAL SECTION

1.0 CIVIL WORKS TECHNICAL SPECIFICATION AND TENDER DRAWINGS

2.0 MECHANICAL WORKS TECHNICAL SPECIFICATION AND TENDER DRAWINGS

3.0 MRPL ENGINEERING DESIGN BASIS

4.0 APPROVED VENDOR LIST

VOLUME-II – INDEX

SL. NO.	DESCRIPTION
1.0	**CIVIL WORKS TECHNICAL SPECIFICATION AND TENDER DRAWINGS**
1.0	Scope Of Civil Works
2.0	General Specification For Civil Works
3.0	Technical Specification For Excavation And Filling
4.0	Technical Specification For Properties, Storage And Handling of Common Building Materials
5.0	Site Development Works/ Area Grading
6.0	Foundation System And Soil Data
7.0	Cement Concrete Works
8.0	Embedded Parts
9.0	Plant Roads, Sewerage And Drainages
10.0	Drawings
2.0	**MECHANICAL WORKS TECHNICAL SPECIFICATION AND TENDER DRAWINGS**
1.0	General
2.0	Drawings
3.0	Site Records
4.0	Mechanical Scope Of Work
5.0	Technical Description Of Mechanical Scope Of Work
6.0	Welding
7.0	Rejection Of Materials
8.0	Despatch
9.0	Codes And Standards
10.0	Quality
11.0	Surface Preparation And Protective Coating
12.0	Insulation
13.0	Electrical Scope of Work-Supply of Cable Trays
14.0	Sketches
15.0	Annexures:
3.0	**MRPL ENGINEERING DESIGN BASIS**
3.1	Design Basis for Surface Preparation and Protective Coating

3.2	Specification for Fabrication and Erection of Piping
3.3	Standard Specification for Non Destructive Examination Requirements of Piping
3.4	Technical Notes for Pipes
3.5	Technical Notes for Valves
3.6	Technical Notes for Fittings
3.7	Technical Notes for Flanges, Spectacle Blinds and Drip Rings
3.8	Technical Notes for Fasteners
3.9	Technical Notes for Gaskets
3.10	Specification for Fabrication and Erection of Underground Piping
3.11	Standard Specification for Hot Insulation of Vessels, Piping and Equipment's
3.12	Design Basis for Safety Requirements
4.0	**APPROVED VENDOR LIST**
4.1	Approved Vendor List of Civil
4.2	Approved Vendor List of Mechanical

VOLUME - II: TECHNICAL SPECIFICATION

1 - CIVIL WORKS TECHNICAL SPECIFICATION AND TENDER DRAWINGS

TABLE OF CONTENTS

1.0 SCOPE OF CIVIL WORKS

2.0 GENERAL SPECIFICATION FOR CIVIL WORKS

3.0 TECHNICAL SPECIFICATION FOR EXCAVATION AND FILLING

4.0 TECHNICAL SPECIFICATION FOR PROPERTIES, STORAGE AND HANDLING OF COMMON BUILDING MATERIALS

5.0 SITE DEVELOPMENT WORKS/ AREA GRADING

6.0 FOUNDATION SYSTEM AND SOIL DATA

7.0 CEMENT CONCRETE WORKS

8.0 EMBEDDED PARTS

9.0 PLANT ROADS, SEWERAGE AND DRAINAGES

10.0 DRAWINGS

1.0 SCOPE OF CIVIL WORKS

1.1 GENERAL

1.1.1 Mangalore Refinery & Petrochemicals Limited (MRPL) is setting up Natural Gas Firing Provision in GTG1 & GTG2 Project of MRPL CPP3 Unit. The scope of this tender enumerates construction of civil works for the above facility. The work involves construction of all type of civil works.

1.1.2 The major civil works consist of the following:

Sl. No.	Facilities
1	Skid/Equipment Foundations
2	Concrete Piperacks and its foundations
3	Concrete Pavement Works
4	Dismantling of existing pavement for casting of foundations
5	Flexible Road/Pavement works with surface drains
	6M Wide with berm and with drains
	4M Wide with berm and with drains
6	Drain by the sides of roads
7	If required, relocation of existing OWS manhole or encasing or suitable protection for the UG OWS pipeline
8	* Dismantling of Galvalume Sheets and Fixing the same for KOD shed (Refer Note 1)
9	Scaffolding work above 24M height

Note 1: RCM will intimate the bidder 10 days in advance based on front availability for commencement of work. Bidder to complete the work within mutually agreed schedule.

Any other work not listed above but is required to complete the project shall be carried out by the contractor.

The contractor will be required to work in close co-ordination with other contractors working in the area.

The Contractor will have to draw up the program of work in consultation with the Consultant and the project authorities to match with the overall project requirements.

Handing over of foundation & other works for erection of equipment to BGGTS will be done through signing off protocols with MRPL/LTSL and BGGTS wherever applicable. Success bidder has to maintain such records and hand over the same to MRPL/LTSL.

1.2 DRAWINGS

1.2.1 The work shall be executed in accordance with the specification and the drawings issued for construction'. Working Drawings will be issued in stages in close coordination with the sequence of construction at site. Only latest revisions of the drawings shall be followed. All old revisions shall be clearly marked 'SUPERCEEDED' and kept separately or destroyed as directed by Consultant.

1.3 SITE RECORDS

1.3.1 All works shall be recorded in appropriate proforma to be firmed up by the contractor in consultation with the Consultant. Where ever required reference to drawings and clauses of specification shall be recorded in the correspondence.

1.3.2 Hindrance register, site order book, manpower deployment data and materials incoming records are to be maintained by the contractor.

1.3.3 Records of cement and steel receipts, issue, and consumption shall be scrutinized from time to time by consultants and Owner. Statement of cement and steel receipts, statement of theoretical consumption and reconciliation shall accompany every bill. Records of spot levels jointly recorded before the start of the work shall form the basis of all measurements.

1.4 SCOPE OF WORK

1.4.1 Statuary clearances from state/central government agencies, if required for this project, shall be obtained by the contractor. The work to be performed under this specification consists of providing all labour, materials, construction equipment, tools and plant, scaffolding, supplies, transportation, all incidental items not shown or specified, but reasonably implied or necessary for successful completion of the work including Contractor's supervision and in strict accordance with the drawings and specifications. The nature of work shall generally involve excavation in filled area, earth cutting, dewatering, shoring and strutting, backfilling around completed structures and plinth filling, disposal of surplus excavated materials and concreting including reinforcement and formwork, road work, providing inserts, steel gratings, anchor bolts, RCC trenches with covers, earth pits, chambers with removable covers, etc and all the other ancillary items required to complete the scope of work. The scope also includes conducting various relevant quality control tests in the field or laboratories as and when required for the construction materials and also for the total work executed under this contract.

All enabling works including bush clearance, micro/site grading if any, laying of bituminous and concrete pavements, Storm water drain etc. Interconnection to the proposed unit wherever required in consultation with Consultant including proper finishing in all respects are covered under the scope of the Contractor.

Grading of the area to the finished levels as shown in the drawings as per drawings/direction of engineer in charge is included in the scope of work.

All serviceable material including scrap shall be handed over to Engineer-In-Charge/MRPL Stores, within a lead of 5 kilometres. Disposal of unserviceable materials/debris etc., outside the refinery including any clearances/permissions in this regard, shall be in the scope of the contractor, which is applicable for the entire work of this contract.

1.4.2 The layout and levels of all structures, etc. shall be made by the Contractor at his own cost from the general grid of the plot and bench mark given by the Consultant. He shall provide all instrument, materials and men to the Consultants for checking the layout and levels. However, the Contractor shall be fully responsible for correctness of layout and levels.

1.4.3 The detailed construction drawings (civil and architectural) will be issued by the consultants. However preparation of bar bending schedule and obtaining the approval from the engineer-in-charge, explanatory sketches, and fabrication details etc. necessary to complete the work shall be in the scope of contractor. The drawings included in the Bidding Document provide a general idea about the work to be performed under the scope of this contract. These are preliminary drawings for bidding purposes only and are by no means the final drawings or show the full range of the work under the scope. Work has to be executed according to latest drawings issued by the Consultant at the time of execution.

1.4.4 The contractor will be required to set up site laboratory at his own cost and maintain all the equipment in proper condition with all calibration and certificates of the equipment. The site laboratory will be manned by independent qualified engineer. The cost of setting up site laboratory and performance of all the tests shall be borne by the Contractor. In case any specific test such as testing of reinforcement, testing of specific materials requiring specialist equipment and conditions, shall be done in approved laboratories. The cost of such tests and the arrangements for witnessing such tests shall be borne by the Contractor.

1.4.5 The scope of work also includes clearance of site of any scrap, debris, etc. before starting the work and recording spot levels at the site of work as well as storage areas. The cost of such clearance shall be included in the quoted rates. The Contractor shall also clear the construction site of all debris and construction materials before handing over. It is the contractor's responsibility to dispose of scraps after classifying into hazardous / non-hazardous, recyclable / non-recyclable at designated disposal areas shown by MRPL EIC within MRPL premises during the works and at the completion of works.

1.4.6 All specimens and approved samples shall be retained with the Consultant for reference unless handed over to Contractor for safe custody. The Contractor shall make arrangements for proper storage of the same.

1.4.7 The Mangalore terminal is in the coastal area and the water table/rainfall is expected to be very high. The Contractor shall adopt suitable continuous special dewatering methods as approved by the Consultant. The period for which the de- watering should be in effect shall be as directed by the Consultant. The cost of dewatering shall be borne by the Contractor.

1.4.8 The Tenderer shall inspect the site, examine and obtain all information required and satisfy himself regarding matters such as access to site, communications, transport, right of way, equipment and facilities required for the work, availability of local labour, materials and their rates, local working conditions, weather, flood levels, subsoil conditions, natural drainage, water table etc. Ignorance of the site conditions shall not be accepted by the client as basis for any claim for compensation or extension of time. Tenderer if necessary shall make necessary bore holes at their own cost to get details of the soil data and site conditions with the permission of MRPL.

1.4.9 Rerouting/terminating of existing underground/over ground service lines/utilities as per the drawings/directions is in the scope of contractor.

1.4.10 Safe storage of all materials, procured by the contractor or supplied by the customer, shall be arranged by the contractor at his own cost. Any kind of damage, pilferage etc.to any material shall be replaced by the contractor at his own cost without any impact on the work schedule.

1.4.11 Blasting/controlled blasting is prohibited in the plant premises as the existing plant is very near.

1.4.12 While executing the works of this tender, necessary care is to be exercised to ensure

that no damage is done to the existing structures/services and the price quoted shall include cost of all such protective measures. Any damage caused to the existing facilities by the Contractor shall have to be rectified and restored to its original condition at his own cost.

1.4.13 Safety provisions are mandatory in the plant premises. Suitable barricading with tin sheets etc., is to be ensured for the safety and warning signs to be provided wherever necessary.

1.4.14 Scaffolding, if used, shall be only with prior design approval. However, while erection of scaffolding; until the scaffolding is fit for use, it shall have caution signage of “UNSAFE FOR USE”.

1.4.15 Sign boards shall be made for buildings and roads, made of Prismatic Reflective Sheeting sticker/printed sticker of approved design and shade or as directed by the engineer-in-charge. Signage Sticker shall be fixed in the M.S. Sheet supported with M.S. pipe/tube embedded with concrete (bottom of the pipe) of required design, size and shape. M.S. sheet and pipe shall be painted with enamel paint of approved colour with primer as per specification.

1.4.16 Dismantling/Breaking/Cutting of RCC/PCC paving by core cutting/ diamond cutting or by any suitable means or as applicable method & disposal of the same from site as per the instructions of Engineer in charge.

1.4.17 Providing and placing 20 Dia. Rebar or 16 Dia rebar in existing concrete (HILTI ANCHORS) as shown in the design drawings.

1.5 APPROVAL AND TESTS

1.5.1 A high standard of quality is required for all materials and workmanship in construction work. They shall be best of the kind obtainable indigenously in each case and shall be procured from manufacturers of repute in order to ensure uniformity of quality and timely supply.

1.5.2 All materials shall be subjected to inspection and testing. The Contractor shall submit samples for testing as may be required by the Consultant. Sampling and testing shall be carried out by the contractor at his cost in accordance with relevant IS Standards. Third party testing, if necessary, shall be done by the contractor and the cost for the same shall be borne by the contractor.

1.5.3 Wherever IS codes are referred, they shall be latest edition/ publication as on date

irrespective of the date of finalisation of the work.

1.5.4 The contractor shall get the Inspection and Test Plan (ITP) approved from MRPL, considering the below mentioned points, prior to use of the same for the work being carried out by them.

a) Check for layout, levels, centreline of the foundations & pedestals etc.,

b) Line & level of shuttering, reinforcement & cover to reinforcement, Inserts, Anchor bolts, pipe sleeves, pockets, dowels etc.,

c) Design mix of concrete, Preparation of pour card before RCC pouring, casting of cubes, concreting, testing of cubes, compaction, finishing & curing.

d) While fabrication of structural steel contractor has to check for straightness & non-wrapping of structural members, dimensional and fit-up checks, visual check for welding, grinding including surface preparation for painting & application of primer, Application of specified paint & painting thickness.

e) While erection at field ensuring correctness of location, orientation of structural members, alignment, levels, field welding, weld visual at field & non-destructive examination like DP test etc. based on the MRPL requirement, grouting, finishing coat of paint.

f) Check for proper backfilling/compaction/completion of sub structure works, check for slopes & thickness of flooring, check for expansion joint/construction joints, Check for concealed pipe embankment & earthing strips etc.,

1.6 REJECTION OF MATERIALS

1.6.1 Any material brought to site which, in the opinion of the Consultant is damaged, contaminated, deteriorated or does not comply with the requirement of this specification shall be rejected and replaced.

1.6.2 If the routine tests or random site tests show that any of the materials, brought to site, do not comply in any way with the requirements of this specification or of IS codes as applicable, then that material shall be rejected.

1.6.3 The Contractor at his own cost shall remove from site any and all such rejected material within the time specified by the Consultant.

1.6.4 Any construction work found unsatisfactory in respect of quality or in non- conformity to the contract shall be removed/rectified to the satisfaction of the engineer-in-charge by

the contractor at his own cost. The decision of engineer in-charge shall be the final and binding on the contractor.

1.7 QUALITY STANDARD

A high standard of quality is required for all materials used in construction work. They shall be the best of the kind obtainable indigenously in each case and shall be procured from manufacturers of repute in order to ensure uniformly of quality and assurance of timely supply.

1.8 CODES

In the preparation of these specifications, the standards referred to are generally latest Indian Standards. However, in the absence of Indian Standard the Contractor is free to use the relevant latest International Standards such as British, American, Japanese or equivalent. In case of any conflicts however between the codes and this specification, the provisions as given in these specifications shall prevail.

1.9 LIST OF APPROVED VENDORS

Please refer to approved vendors list provided with tender.

2.0 GENERAL SPECIFICATION FOR CIVIL WORKS

2.1 GENERAL

This section of the specification deals mainly with the technical specification needed for site survey, geotechnical investigation, and survey for availability of suitable construction material nearby, construction of the necessary civil, structural works associated with the Natural Gas Firing Provision In GTG1 & GTG2 Project of MRPL CPP3 Unit. The work shall have to be carried out both below and above ground level and shall be involving, equipment foundations, grounding, slabs, beams, columns, footings, trenches, pits, access roads, and all other civil, structural works associated with the complete package, including supply of labour, materials etc. all complete as per approved specification/ drawings and to the satisfaction of the Engineer-in-charge.

2.1.1 The work to be performed under this specification consists of construction/erection of all facilities up to successful handover under the scope of works, providing all labour, materials, consumables, equipment, temporary works, temporary storage sheds, temporary colony for labour and staff, temporary site offices, constructional plants, fuel supply, transportation and all incidental items not shown or specified but reasonably implied or necessary for the completion and proper functioning of the plant, all in strict accordance with the specifications including revisions and amendments thereto as may be required during the execution of work.

2.1.2 All materials including cement, reinforcement steel, etc., shall be supplied by the successful Bidder along with necessary test certificates at the time of delivery.

2.1.3 The scope shall also include setting up by the Bidder a complete testing laboratory in the field to carry out all relevant tests as per IS Codes or other International standards where IS does not cover particular test required for the Civil Works for the project. For testing of structural steel works, ultrasonic testing machines, radiographic testing machines, dye-penetration test equipment etc. shall be deployed.

2.1.4 The work shall be carried out according to the design/ drawings to be developed. The Bidder's work shall cover complete requirements as per IS codes, HSE / fire safety norms, requirements of various statutory bodies, best prevailing practices and to the complete satisfaction of the consultant/Owner.

2.1.5 The Bidder shall inspect the site, examine and obtain all information required and satisfy himself about all site condition such as access to site, communications, transport, right of way, the type and number of equipment and facilities required for the

work, availability of local labour, materials, water, local working conditions, weather, flood levels, subsoil conditions, natural drainage, etc.

2.1.6 The Bidder shall make the layout and levels of all structures from the grid / bench mark pillars of the plot and the nearest GSI benchmark or other acceptable benchmark as per the directions of the Engineer. The Bidder shall be solely responsible for the correctness of the layout and levels and shall also provide necessary instruments, materials, access to works, etc., to the Engineer for general checking of the quality & correctness of the civil works.

2.1.7 Bidder shall prepare FQP, FQA as per standard including practice which shall be approved by the Engineer-in-charge. All the quality standards, tolerances, welding standards and other technical requirements shall be strictly adhered to.

2.1.8 The Bidder shall fully appraise himself of the prevailing conditions at the proposed site, climatic conditions including monsoon pattern, soil conditions, local conditions and site specific parameters and shall include for all such conditions and contingent measures in the bid, including those which may not have been specifically brought out in the specifications. No additional claim shall be admissible to the Bidder later on account of any ignorance or variation with respect to the above conditions/information gathered.

2.1.9 Bidder is requested to go through the bid documents carefully. In case of any contradiction/conflicts in various clauses given here in, the same shall be brought to the notice of the consultant/Owner. Consultant's/Owner's decision shall be binding on Bidder and shall have no implication to Owner.

Deviations from bid documents, if any, shall be furnished by Bidder, clause wise clearly.

2.1.10 Any exclusion from the scope mentioned and implied in these specifications, shall be clearly mentioned by the Bidder separately in a section titled "EXCLUSIONS". All works, other than these for satisfactory performance of the plant, deemed to be in the scope of this contract and shall be executed by the Bidder at no extra cost to the Owner.

2.1.11 List of equipment to be deployed by the Bidder and his associates is to be furnished.

2.1.12 Time being essence of contract, Bidder shall submit L-1, L-2 & L-3 schedule for, construction and services for each structure.

2.1.13 A detailed note on quality plan for construction activity proposed to be adopted for

assuring quality of all works shall be furnished.

2.1.14 List of all sub-contractors that the bidder proposes to employ, in case the contract is awarded to him, shall be submitted to the Consultant/Owner indicating their addresses, telephone number, experience on similar jobs, name, qualification and experience of persons who shall be involved in the project on behalf of the Bidder etc. Only the Sub contractors approved by the Consultant/Owner shall be engaged by the Bidder on the job.

2.2 SUBMISSIONS

2.2.1 Commencement of fabrication & erection and construction shall be done after approval of the relevant documents and drawings.

2.2.2 The documents and drawings as listed below are to be submitted for the approval of the consultant/Owner, unless specified otherwise. The list given below is not exhaustive but indicative only.

a) Geotechnical investigation along with the report shall be required to be carried out by the bidder for establishing the sub-soil condition and to decide the type of foundations for the structures.

b) The storm water network for GCS area will be terminated at the nearest existing storm water drain by EPC contractor.

c) Survey drawings indicating spot levels for the required areas and L-section along pipe corridors.

d) Marking scheme identifying the equipment lay-down areas, with dipstinctive colour scheme.

e) Latest Material test certificates for Cement/ Reinforcement steel or any other materials from the manufacturer or approved testing laboratories on demand by the consultant/Owner.

f) Bill of materials, detailed catalogue/ information of all direct supplied items is also to be submitted

g) One complete set of applicable standards, references, specifications, code of practice to the Engineer for use at site.

h) Wherever applicable, scheme for dewatering, shoring, strutting/ sheet piling and other construction enabling works as required by the consultant/Owner.

2.3 CODES AND STANDARDS

All applicable Standards, References, Codes of practice etc. shall be the latest edition including amendments and revisions.

2.4 SCOPE OF CIVIL WORKS

The scope of civil work comprises of all necessary investigations, survey, foundations, superstructures and infrastructure required for the complete operating of Natural Gas Firing Provision in GTG1 & GTG2 Project of MRPL CPP3 Unit facilities and as noted below indicatively.

The work under this section consists of Civil works, but not limited to items mentioned below

a) Facilities listed under Scope of Civil works.

b) Cable trenches, racks, duct banks, manhole and pipe trenches

c) Permanent access road to be connected to the plant main road and pavements for the various facilities.

d) Surface drains and storm water drainage connected to existing storm water drainage system of the plant

e) All civil works required for fire protection system

f) All necessary waterproofing, damp proofing and anticorrosive treatment, structures and foundations, including underground construction.

g) All necessary civil works for crossing pipes/cables below for roadways and other services inside the plant boundaries.

h) Removal of debris, micro levelling of the site all-round premises within the scope of contract prior to completion of work.

i) Supply of grout and grouting below all equipment / structures

j) All necessary civil work required for road lighting within the plant boundaries.

k) Dismantling of buried/semi-buried structures, if any, encountered within the plant limits and disposal of it within a distance of 6 km from the site as directed by the consultant/Owner.

The materials and services will include but not be limited to the following:

a) Site clearing, dressing, levelling and grading of formation to required levels (if any) and soil compaction as necessary within the battery limits as shown in the bid drawing.

b) Earthwork for equipment foundations, trenches, pits and other construction work.

c) Back filling, soling and sub-grade work for all foundation, grouting, trenches, pits and other underground structures.

d) Concrete and reinforced concrete work in sumps, pits, trenches and other underground structures

e) Concrete and reinforced concrete work in columns, tie beams, beams, slabs, frames and other superstructures

f) All fencing and gates as required.

g) All necessary technological and equipment supporting structures

h) Hand railing, inserts, kerb angles, bolts etc.

i) Final clearing, dressing and finishing of all the areas under scope, attending all punch list points to the satisfaction of the consultant/owner or his representatives.

2.5 It is not the intent to specify herein all the works in the scope of this contract. The scope also includes all other structures and works necessary which are not specifically mentioned here but required for construction, operation and maintenance of the Natural Gas Firing Provision in GTG1 & GTG2 Project of MRPL CPP3 Unit are deemed to be included in the scope of the CONTRACTOR. All works shall conform to the specification. The works shall conform to high standards of design, engineering and workmanship. Design and construction shall conform in every respect to all local and state regulations governing such works and to stipulations of Indian Standards unless stipulated otherwise in detail specification.

3.0 TECHNICAL SPECIFICATION FOR EXCAVATION AND FILLING

3.1 INTENT

3.1.1 This section of the specification covers the technical requirements of excavation and filling for structures, foundations, trenches, pits, drains, underground facilities & similar works. It also covers filling areas and plinths with selected materials, conveyance and disposal of surplus spoils and / or stacking them properly as directed by the Engineer.

3.1.2 This section covers the technical requirements of, filling in and around structures, foundations, trenches, pits, drains, underground facilities and similar works.

3.1.3 The Contractor shall be fully responsible for proper setting out of works, profiling in excavation, stacking of material. It shall be the responsibility of the Contractor to make adequate safety measures at the site. The Contractor shall carry out all works meant within the specification, even if not explicitly mentioned herein. All works shall be executed to the satisfaction of the Engineer.

3.1.4 The Contractor shall take all necessary precaution so as not to damage or endanger any property, structures, roads, installation or services in the vicinity of the area. It shall be the responsibility of the Contractor, to take all necessary measures to protect existing facilities, trees or any other structures within or adjacent to the works being carried out which are not to be disturbed. The Contractor shall provide and install suitable safeguards approved by the Engineer for this purpose.

3.1.5 The Contractor shall make all necessary and adequate measure during the progress of work against soil erosion, water and environmental pollution. It shall be the responsibility of the Contractor to undertake any additional work necessary to achieve this objective at no additional cost to the Engineer/Purchaser.

3.1.6 The Contractor shall take prior approval from the Engineer about his work plan and the procedure he intends to follow for the works covered under the scope of this specification and the schedule for carrying out temporary and permanent control works. However, the approval of such plans and procedures shall not relieve the Contractor of his responsibility for safe and sound work.

3.2 GENERAL REQUIREMENTS

3.2.1 Prior to beginning excavation and filling work, a contract or permit shall be obtained from the Engineer/Purchaser.

3.2.2 The Contractor shall make arrangements to perform surveying activities in locating co-

ordinates and establishing reduced levels. The Engineer/Purchaser shall furnish the Contractor with two reference grid lines and one Benchmark. The Contractor shall make necessary arrangement for all the survey instrument along with qualified surveyor to the satisfaction of the Engineer, so that work can be carried out accurately and according to the specification and drawings.

3.2.3 The Contractor shall furnish all skilled and unskilled labour, plant, tools, tackles, equipment, men, materials, required for complete execution of the work in accordance with the statutory labour regulation, drawings and as described herein and / or as directed by the Engineer.

3.2.4 The plot boundaries shall be marked using stakes or lath with coloured plastic flagging. The lath shall be placed at sufficient interval to enable work crews and the Engineer/Purchaser to identify the boundaries of excavation / filling.

3.2.5 The Contractor shall make all necessary and adequate measures to prevent water from the site of his operation from causing nuisance on or in any adjacent areas/sites and neighboring property. The Contractor shall construct wherever necessary temporary drainage or other siltation prevention structures to prevent surface water from running into the excavated areas during construction. It shall be responsibility of the Contractor to properly slope the surface of the ground to the satisfaction of the Engineer.

3.2.6 The materials obtained from within the plot area as a result of excavation or any previously unrecorded services or other objects discovered during excavation shall be notified to the Engineer/Purchaser. Any material of archaeological importance or of value (in the opinion of the Engineer) discovered during excavation shall be stacked separately and in a regular manner at locations identified by the Engineer.

3.2.7 It shall be responsibility of the Contractor to locate existing utilities and services if any at the locations within the work premises by contacting local authorities. Any information available with the Engineer/Purchaser shall be made available to the Contractor on request. The Contractor shall take every preventive measure, including provision of all necessary temporary supporting, bridging, and shoring and safety barriers, to protect these services and facilities from damage or interference during the execution of the works. The stability of existing above ground and underground services shall be maintained during the work.

3.2.8 Excavation shall include removal of trees, including roots and organic remains,

vegetation, grass, bushes, shrubs, plants, poles, fences, etc. that are in the area to be excavated as well as beyond the excavation line so as to ensure safety of the excavated side slopes, and of men and equipment operating in the area. Before start of work, joint measurements of ground level shall be taken after clearing all grass, vegetation etc.

3.2.9 Excavation shall include the removal of all materials required to execute the work, properly and shall be made with sufficient clearance as decided by the Engineer or defined by payment line to permit the placing and setting of forms, inspection and completion of all works to the satisfaction of the Engineer for which the excavation was done.

3.2.10 The Contractor shall perform the work as per the drawings, issued to him.

3.2.11 All materials required for the work shall be of best commercial variety and approved by the Engineer. Borrow material required for filling shall be excavated from approved locations and levels and shall consist of material, free from roots, vegetation, decayed organic matter, harmful salts and chemicals, free from lumps and clods. If specified, clean graded sand, free from harmful and deleterious material from approved quarries, shall be used as fill material.

3.2.12 The Contractor shall carry out the proposed work in smooth cordial manner with Contractors of other ongoing works in the plant.

3.2.13 Wherever reference is made to ‘drawings’ in this specification it shall mean the latest issue of the ‘Released for Construction’ drawings.

3.3 CODES AND STANDARDS

3.3.1 All standards, specifications, acts, and codes of practice referred to herein shall be the latest editions including all applicable official amendments and revisions.

3.3.2 In case of conflict between this specification and those (IS standards, codes etc.) referred to herein, the former shall prevail. In case any particular aspect of work is not covered specifically by this specification and IS Codes, any other standard practice as may be specified by the Engineer, shall be followed.

3.3.3 Some of the relevant Indian Standards, Acts and Codes referred are given below:

IS:383	Specification for coarse and fine aggregates from natural sources for concrete.
IS:1037	Code of practice for field control of moisture and compaction of soils for embankment and sub-grade.

IS:1200	Method of Measurement of building and civil engineering work earthwork (Part-I).
IS:2720	Methods of test for soils -Determination of water content etc. (Part-II, IV to VIII, XIV, XXI, XXIII, XXIV, XXVII to XXIX, XL)
IS:3764	Safety code for excavation work.
IS:4701	Code of practice for earthwork on canals.
IS:9758	Guide lines for Dewatering during construction.

3.4 TECHNICAL REQUIREMENT- EXECUTION

3.4.1 Excavation & Classification

The excavation shall be carried out as per the approved proposal. The work shall be carried out without endangering the safety of nearby structure and without causing hindrance to other activities in the area. As the excavation reaches the required dimensions, lines, levels and grades, the Engineer shall be notified, so as to avoid any over excavation. In certain cases, where deterioration of the ground, upheaval, slips, etc., are expected, the Engineer may order to suspend the work at any stage and instruct the Contractor to carry out the balance work later. No extra will be paid to the Contractor for such unavoidable temporary suspension of work.

For purposes of work to be executed in accordance with this specification, the following classification only, shall apply. In case of any dispute regarding classification of materials excavated / filled, the decision of the Engineer shall be final and binding on the Contractor.

3.4.1.1 Soil / Rock shall be classified as follows

A. Soil

Earth excavation shall consist of removal of all material encountered which can be excavated by pick axes or spades or earth moving equipment such as shovels, draglines, etc. and which are not classified under rock as defined in specification. Earth excavation shall include, but shall not be limited to, vegetation or organic soil, turf, sand, silt, mud, moorum, shingle, clay, gravel, loam, macadam, peat, shale, ash, marsh, bricks, tar/bitumen surfaces, lime concrete, stone/brick masonry etc. It shall also include embedded rock, boulders having maximum diameter in any one direction not exceeding 300 mm.

B. Disintegrated / Weathered Rock (not requiring blasting, wedging or similar means)

This may be quarried or split with crow bars or pick axes such as lime stone, sand stone, hard laterite, hard conglomerate and unreinforced cement concrete below ground level. It shall also include rock, which is normally hard requiring blasting when dry, but can be excavated without blasting, wedging or similar means, when wet. Soft rock excavation shall consist of the excavation of boulders, having maximum diameter in any direction or more than 300 mm lying loose on the surface or embedded in soil, and all rock in ledges, and bedded / conglomerated deposits so firmly cemented that they cannot be removed by common earthmoving tools/equipment.

C. Hard Rock

Hard rock (requiring blasting) - Any rock or boulder for the excavation of which blasting is required such as quartzite stone, granite, basalt, reinforced cement concrete (reinforcement to be cut through but not separated from concrete) below ground level etc.

Hard rock (blasting prohibited) - This shall cover any Hard rock requiring blasting as described above but where blasting is prohibited for any reason and excavation has to be carried out by chiseling, wedging or any other approved method.

In case of any dispute regarding classification, the decision of the Engineer shall be final.

3.4.2 Excavation in Soil

3.4.2.1 Sides and bottoms of excavation shall be cut sharp and true to line and level. Undercutting shall not be permitted. When machines are used for excavation, the last 300mm before reaching the required level shall be excavated manually. Suitability of strata (at the bottom of excavations) for laying the foundation thereon shall be determined by the Engineer.

3.4.2.2 Excavation for foundations shall be to the bottom of lean concrete and as shown on drawings or as directed by the Engineer. The bottom of all excavations shall be trimmed to required levels and when excavation is carried below such levels, by error, it shall be brought back to specified level by filling with concrete of nominal mix 1:2:4 or 1:1.5:3 (cement: coarse sand: 40mm down aggregates) as directed by the Engineer at

the Contractor's cost.

3.4.2.3 The Contractor shall ascertain for himself the nature of materials to be excavated and the difficulties, if any, likely to be encountered in executing this work. Cofferdams, sheeting, shoring, bracing, maintaining suitable slopes, draining etc. shall be provided and installed by the Contractor at no extra cost, unless mentioned in the Schedule of Items, to the satisfaction of the Engineer.

3.4.2.4 All excavation for installation of underground facilities, such as piping, cable duct, sewer lines, drain lines, etc. shall be open cuts. For deep and huge excavations and in other excavations, if required by the Engineer, the Contractor shall submit an "Excavation Scheme" for Engineer's approval showing the methodology to be adopted for excavation in order to maintain the stability of side slopes, means for ensuring safety of existing facilities nearby, dewatering as described in specification. However, the Contractor shall be fully responsible for the scheme irrespective of any approvals granted. Benching shall be provided for deeper excavation wherever required.

3.4.2.5 When excavation requires bracing, sheeting or shoring etc., the Contractor shall submit drawings to the Engineer, showing arrangements and details of proposal installation. The Contractor shall also furnish all supporting calculations as called for and shall not proceed until he has received written approval from the Engineer. However, the responsibility for adequacy of such bracing, sheeting, shoring etc., will rest with the Contractor, irrespective of any approval of the Engineer.

3.4.2.6 The Contractor shall have to constantly pump out any water collected in excavated pits and other areas due to rain water, seepage, springs etc. and maintain dry working conditions at all times until the excavation, placement of reinforcement, shuttering, concreting, back filling is completed. For the purpose of keeping the area dry through dewatering process, additional sumps as required as per site condition are to be made/excavated by the Contractor. The Contractor shall remove all slush/muck from the excavated areas to keep the work area dry. Sludge pumps, if required, shall be employed by the Contractor for this purpose.

3.4.2.7 The Contractor shall remove all materials arising from excavations from the vicinity of the work either for direct filling, stacking and subsequent filling or for ultimate disposal as directed by the Engineer. In no case, shall the excavated soil be stacked within a distance of 3.0m from the edge of excavation or one-third the depth of excavation whichever is more. Material to be used for filling shall be kept separately.

3.4.2.8 Excavated material shall be used for fill unless it is classified as unsatisfactory.

3.4.3 Excavation in Disintegrated / Weathered Rock

3.4.3.1 All clauses of 3.4.2 shall be applicable to excavation in disintegrated / weathered rock also. In case of any discrepancy between the above mentioned clause and those specified in this clause then the later shall govern.

3.4.3.2 The Contractor shall arrange for excavating such rock by profusely wetting it. If required, light blasting may be resorted to for loosening the materials at Contractor's cost, but this will not entitle the material to be classified as Hard rock.

3.4.3.3 In case of overbreaks in rock excavation, the excavated level shall be brought to the level shown on drawings with plain cement concrete of nominal mix as described in clause no. 3.4.2 (ii)

3.4.4 Excavation in Hard Rock

All clauses of 3.4.2 shall be applicable to excavation in rock also. In case of any discrepancy between the above mentioned clause and those specified in this clause then the later shall govern.

In case of overbreaks in rock excavation, the excavated level shall be brought to the level shown on drawings with approved fill material, compacted.

3.4.4.1 Chiseling / Wedging

Where blasting is prohibited for any reason or it is not practicable in opinion of the Engineer, then the excavation shall be carried out by chiseling, wedging or any other approved method. The decision of the Engineer in this regard shall be final and binding on the Contractor.

3.4.5 Dewatering & Excavation below Ground Water Table

3.4.5.1 All excavations shall be kept free of water and slush. Grading in the vicinity of excavations shall be controlled to prevent surface water running into excavated areas. The Contractor shall remove by pumping or other means approved by the Engineer any water inclusive of rainwater and subsoil water accumulated in excavation and keeps the excavation area dewatered until excavation, concreting, curing and all other operation included in the scope of work, which require dry condition in the area are completed. Method of pumping shall be approved by the Engineer but in any case, the pumping arrangement shall be such that there shall be no movement of subsoil or blowing in due to differential head of water during pumping.

3.4.5.2 Wherever ground water table is met with during excavation, the Contractor shall immediately report this fact to the Engineer who shall arrange to record the exact level of the water table before start of dewatering operation. The decision of the Engineer regarding ground water level shall be final and payable provided the Contractor has made arrangement for its dewatering. For this purpose, Contractor shall submit de-watering scheme to the Engineer before starting the excavation.

3.4.5.3 In case of ground water table is met with during excavation and approved by the Engineer, the Contractor shall dewater and maintain dry working conditions by maintaining the water table below the bottom of the excavation level by well-point dewatering or deep well dewatering or any other method approved by the Engineer. He shall continue doing so till excavation and all other operations included in the scope of work, which require dry condition in the area are completed.

3.4.6 LIFT

The Contractor is required to excavate upto any depth as shown on the drawings or as directed by the Engineer. Lifting of excavated materials shall be done either by manual or mechanical or both means if called for by the Engineer.

3.4.7 Carriage of Excavated Materials

3.4.7.1 All suitable excavated material shall be directly utilized for filling purposes. In case the excavated materials are to be used for future filling purposes or found unsuitable for filling, they shall be stacked / stockpiled / disposed as directed by the Engineer. The carriage of excavated materials shall be done by the methods mentioned below:

3.4.7.2 The excavated materials shall be carried beyond the working area but upto 500 m manually or by mechanical means as directed by the Engineer.

3.4.7.3 For carriage exceeding 500 m and upto 2000m, the Contractor shall transport the excavated materials by mechanical means only and as directed by the Engineer. The Contractor shall arrange for temporary access roads for this purpose. Providing and maintaining of the access roads shall be the responsibility of the Contractor.

3.4.7.4 Some excavated materials required for filling purposes, may have to be carried upto a lead of 500 m and stacked as per instructions of the Engineer. Excavated materials carried beyond 500 m shall be for direct filling or for disposal purpose. Double handling of materials shall be avoided as far as possible. However, depending on site conditions, excavated materials carried beyond a lead of 500 m may also be required to be brought back for filling purpose.

3.4.8 Stockpile Area

3.4.8.1 Stockpile of Excavated Material

a) Stockpiling of excavated material suitable for filling purposes shall be done at the location as directed by the Engineer/Purchaser / Engineer at site.

b) The stockpile area shall be sloped to drain properly and provided with devices to control erosion.

c) Stockpile of Rocks shall be done separately.

3.4.9 Disposal of Excess Satisfactory Excavated Material

Excess excavated material, which is satisfactory for use as fill material, shall be used for other fills or be placed in a designated onsite stockpile area. Material may be removed from the stockpile area at a later date and utilized / disposed off as directed by the Engineer.

3.4.10 Disposal of Unsatisfactory Material

Excavated material, which is unsatisfactory for use as fill, shall be disposed of in an offsite or in an onsite disposal area as directed by the Engineer/Purchaser / Engineer at site. Unsatisfactory material shall not be mixed with satisfactory material.

The disposal area shall be sloped to drain properly and control erosion and seeded.

3.4.11 Ground Improvement Work

If the existing engineering properties of the ground results in liquefaction, unacceptable total and/or differential settlement or bearing capacity failure, the Contractor shall carry out ground improvement work as per the recommendation in the soil investigation report, the requirement of the Engineer/Purchaser and as directed by the Engineer.

Ground improvement techniques shall be covered separately, if required and relevant Indian Standard Codes shall also be referred.

3.4.12 FILLING

3.4.12.1 Materials

a) The material used for filling shall consist of material approved by the Engineer and obtained directly from nearby areas where excavation work is in progress or from temporary stacks of excavated soil spoils or from borrow pits from selected areas

designated by the Engineer. The material shall be free from lumps and clods, roots and vegetation, harmful salts and chemicals, organic materials etc.

b) Materials, when used for filling purposes, shall be obtained from the excavated materials consisting of soil, stone, sand or other inorganic materials and they shall be clean and free from shingle, organic, large roots and excessive amount of sod, lumps, concrete or any other foreign substances which could harm or impair the strength of the substructure in any manner. All clods shall be suitably broken to small pieces. When the materials are mostly rock boulders, the same shall be stacked properly at the designated place as directed by the Engineer. Sand used for filling shall be clean, medium grained and free from impurities. Fines less than 75 microns shall not be more than 20% in any case and the materials to be used for filling purposes shall have the prior written approval of the Engineer.

c) Borrow materials, when used, shall be obtained from approved quarries and shall conform to the specification mentioned elsewhere. Acceptable granular materials are soils, which are classified as coarse-grained soils in the Indian Standard Soil Classification System, IS: 1498 - 1970. Classifications are GW, GP, GM, GC, SW, SP, SM or SC, or combinations of these such as SP-SC.

d) Cohesive material is suitable for use as Fill if it contains not more than 1 percent organic or other deleterious material, has a liquid limit of less than 40 and a plasticity index of less than 25. Acceptable cohesive materials are soils which are classified as fine-grained soils in the Indian Standard Soil Classification System, IS: 1498-1970. Classification is CL.

e) Soil-rock mixtures are acceptable for use as fill if they contain a sufficient soil matrix to prevent nesting of larger pieces and the material contains less than one percent organic or other deleterious material.

f) It is intended to use the excavated earth from the site for filling provided the material confirms to the soil / soil-rock mixture specification as stipulated above and approved by the Engineer. If excavated materials are to be used for filling purposes, Contractor shall select the materials from the excavation / stockpile, test, load and transport this material and execute the filling. This shall include excavation of earth which may become hard due to laying in stockyard for long period of time. However this shall not be measured under excavation.

g) In case the materials have to be brought from pits/quarries, then it shall be the Contractor's responsibility for identification of such quarry, areas, obtaining approval for their use from concerned authorities, excavation/ quarrying, loading and carriage of such material, unloading and filling at such locations. The Contractor shall pay any fees, royalties etc. that may have to be paid for utilization of borrows areas.

3.4.13 CNS (Cohesive Non-Swelling) Material

The CNS material to be used for filling shall meet either 'a' or 'b' of the following criteria.

	PROPERTY	SPECIFICATION RANGE
a)	**i) Grain Size Analysis**	
	Clay	15 - 25 %
	Silt	35 - 50 %
	Sand	30 - 40 %
	Gravel	Less than 10 %
	ii) Consistency Limits	
	Liquid Limit	30 - 50 %
	Plastic Limit	20 - 25 %
	Plasticity Index	10 - 25 %
	Shrinkage Limit	15 % and above
	iii) Swelling Pressure • Swelling pressure when compacted to maximum Less than dry density corresponding to standard proctor 0.1 kg/cm^2 compaction with zero initial compaction moisture constant, for no volume change condition	
	• Swelling pressure when compacted to maximum Less than dry density corresponding to standard proctor 0.05 kg/cm^2 compaction and initial compaction moisture corresponding to optimum moisture content for no volume condition	
b)	CNS material with optimum percentage of clay upto 70 % shall be mixed with sand (30 %) and lime (1- 2 %) to meet consistency limits and swelling pressure as specified above.	

3.4.13.1 Material unsatisfactory for use as fill are as follows;

a) Soils classified as silt or organic soils in the Indian Standard Soil Classification System, IS: 1498-1970. Classifications are ML, MH, PT, OL and OH.

b) Soil classified as high liquid clay soils in Indian Standard Soil Classification System, IS: 1498-1970. Classification is CH.

c) Rock material without a soil matrix in which nesting of rocks could occur.

d) Any material, which is frozen, contains an excessive amount of organic material or trash or contains large rocks, shall be considered unsatisfactory for use as fill.

e) Top soils which are friable sandy-loam suitable to sustain the growth of vegetation

f) Restrictions on the use of poorly graded sand (SP) or silty sand (SM) material are as follows:

g) No granular material with a silt content of greater than 15 percent shall be used for Fill.

3.4.13.2 Filling Procedure

a) After completion of foundation, footings, walls and other construction below the elevation of the final grades, and prior to filling, all temporary shoring, timber, etc. shall be sequentially removed and the excavation cleaned of all trash, debris, and perishable materials. Filling shall begin only with the written approval of the Engineer. Also, areas identified for filling shall be cleared of all soft pockets, vegetation, bushes, slush etc. In case of plinth and similar filling, the ground shall be dressed and consolidated by ramming and light rolling.

b) Fill materials shall not be dropped directly upon or against any structure or facility where there is danger of displacement or damage. Filling shall be started after the concrete/masonry has fully set and shall be carried out in such a manner so as not to cause any undue lateral thrust on any part of the structure.

c) All space between foundation (concrete or masonry) and the sides of excavation shall be filled to the original surface after making allowance for settlement. Fill shall be placed in horizontal layers not exceeding 300mm loose thickness. Each layer shall be watered and compacted with proper moisture content and with such equipment as may be required to obtain a compaction/density as specified. Trucks or heavy equipment for depositing or compacting fill shall not be used within 1.5 meters of building walls, piers, or other facilities which may be damaged by their weight or operation. The methods of compaction shall be subject to the approval of the Engineer. Pushing of earth for filling shall not be adopted under any circumstances.

d) Fill adjacent to pipes shall be free of stones, concrete, etc. and shall be hand placed and compacted uniformly on both sides of the pipe and where practicable up to a

minimum depth of 300mm over the top of pipes. While tamping around the pipes, care shall be taken to avoid unequal pressure.

e) Filling shall be accurately finished to line, slope, cross section and grade as shown on the drawings. Finished surface shall be free of irregularities and depressions and shall be within 20mm of the specified level.

f) Where filling with stone from excavated materials is specified, it shall be from broken pieces of boulders. At first, a 75mm thick cushion of selected earth shall be laid over which the 200mm thick graded stones shall be laid in loose layers and then the interstices filled with available earth/ moorum. Each layer shall be watered and compacted to the specified density before the next layer is laid. However, no cushion shall be required where filling is over non-rocky surface.

g) Where filling with 65mm down graded stone obtained from excavated materials/ borrow areas/ quarries is specified, it shall be selected stone laid over an initial 50mm thick cushion layer of selected earth and then stone laid in 200mm loose thick layers, interstices filled with properly graded fine material consisting of selected earth brought from borrow areas. Each layer shall be watered and compacted to the specified density before the next layer is laid. However, no cushion shall be required where filling is over non-rocky surface.

h) Where clean stone fill is specified, it shall consist of clean selected stone metal of 40mm nominal size. It shall be laid in layers not exceeding 150mm (loose) and lightly tamped before the next layer is laid. No compaction shall be required for this type of stone filling. Unless otherwise mentioned in the drawings or schedule of item.

3.4.13.3 Compaction

a) Where compaction to 85% Standard Proctor Density is called for, such compaction shall be by mechanical means but the Contractor may be permitted to adopt manual means only if the Engineer finds that the desired compaction is achievable in the field.

b) Where compaction more than 85% of Standard Proctor Density is called for, it shall be by mechanical means only. Where access is possible, compaction shall be by 12 Ton rollers smooth wheeled, sheep foot or wobbly wheeled as directed by the Engineer. A smaller weight roller may be permitted by the Engineer in special cases, but in any case not less than 10 passes of the roller will be accepted for

each layer. Each layer shall be wetted or the material dried by aeration to moisture content of 3-5% above the Optimum Moisture Content, to be determined by the Contractor. Each layer shall be watered, rammed and compacted to the density as specified.

c) For compacting each sand layer, water shall be sprayed over it to flood it and it shall be kept flooded for 24 hours to ensure maximum compaction. Vibro-compactors shall also be used if necessary to obtain the required degree of compaction. Any temporary works required to contain sand under flooded condition shall also be undertaken. The surface of the consolidated sand shall be dressed to required levels or slope.

d) When soils are used that develop a densely packed surface as a result of spreading or compaction, the surface of each layer of fill shall be sufficiently roughened after compaction to ensure bond of the succeeding layer.

e) After the compacted fill has reached the desired level, the surface shall be flooded with water for 24 hours, allowed to dry and then rammed and consolidated to avoid any settlement, at a later date. The compacted surface shall be properly shaped, trimmed and consolidated to an even gradient or level. All soft spots shall be excavated, filled and consolidated.

f) The degree of compaction of compacted fill in place will be subject to tests to be conducted by the Contractor and witnessed by the Engineer as the work progresses. The Contractor shall provide all the necessary facilities to make such tests. Each layer of compaction fill shall be tested before proceeding with the next layer. It shall be the responsibility of the Contractor to conduct tests to ascertain the degree of compaction of fill material in place. At the time of conducting test it shall be mandatory on the part of the Contractor to inform the Engineer. It is the Contractor's responsibility to request inspection prior to proceeding with further work.

g) If any test indicates that the compaction achieved is less than the specified degree of compaction, the Engineer may advise all fill placed subsequent to the last successful test to be removed and recompacted by the Contractor. Compaction procedure shall be amended as necessary to obtain satisfactory results.

h) When the Engineer specifies semi-compacted fill (area filling), the Contractor shall fill up such areas with available earth from stockpiles or borrow pits or directly from excavation without special compaction except that obtained by moving trucks, etc.

3.4.14 TIMBER SHORING

Timber Shoring made out of approved quality of timber shall be 'close' or 'open' type, depending on the nature of soil and the depth of pit of trench and the type of timbering shall be determined by the Engineer. It shall be the responsibility of the Contractor to take all necessary steps to prevent the sides of trenches and pits from collapsing.

3.4.14.1 Close Timbering

a) Close timbering shall be done by completely covering the sides of the trenches and pits generally with short, upright members called 'polling boards'. These shall be of minimum 250x40 mm sections as directed by the Engineer. The boards shall generally be placed in position vertically in pairs, one board on each side of cutting, and shall be kept apart by horizontal walers of strong wood at maximum 1.2 metres spacing, cross strutted with ballies or as directed by the Engineer. The length of the balli struts shall depend on the width of the trench or pit.

b) In case where the soil is very soft and loose, the boards shall be placed horizontally against the sides of the excavation and supported by vertical walers, which shall be strutted to similar timber pieces on the opposite face of the trench or pit. The lowest board supporting the sides of the trench or pit shall remain exposed so that the vertical side of the trench or pit is exposed, and the earth is not liable to slip out.

c) The withdrawal of the timber shall be done very carefully to prevent the collapse of the pit of trench. It shall be started at one end and to be proceeded systematically to the other end. Concrete or masonry shall not be damaged during the removal of the timber. No claim shall be entertained for any timber which cannot be withdrawn and is lost or buried.

3.4.14.2 Open Timbering

In the case of open timbering, the entire surface of the side of trench pit is not required to be covered. The vertical board of minimum 250 mm width and minimum 40 mm depth shall be spaced sufficiently apart to leave unsupported strips of maximum 300 mm average width. The detailed arrangement, sizes of the timber and the distances apart shall be subject to the approval of the Engineer. In all other respects, specification for close timbering shall apply to open timbering.

3.4.14.3 Treatment of Slips

The Contractor shall take all precaution to avoid high surcharges and provide proper surface drainage to prevent flow of water over the side. These precautions along with proper slopes, berms, shoring and control of ground water should cause no slips to occur. If however slips do occur due to causes beyond the control of the Contractor, the same shall be removed by him and payment shall be made to him on appropriate item rate of earthwork approved by the Engineer. Slips caused due to negligence of the Contractor will be cleared and back-filled later by him at his own expenses.

3.5 SAMPLING TESTING AND QUALITY CONTROL

3.5.1 General

3.5.1.1 The Contractor shall examine the areas and conditions under which earthwork is to be done and notify the Engineer/Purchaser in writing, about the conditions, detrimental to proper and timely completion of the Work.

3.5.1.2 The Contractor shall carry out all sampling and testing as per Table-1 and in accordance with the relevant Indian Standards. Where no specific testing procedure is mentioned, the tests shall be carried out as per the prevalent accepted engineering practice in concurrence of the Engineer. Tests shall be done on the field and at a laboratory approved by the Engineer and the Contractor shall submit to the Engineer, the test results in triplicate within three days after completion of a test.

3.5.1.3 Material, placing procedures and installations and test conducted by the Contractor are subject to inspection. Such inspections and tests shall not relieve Contractor of responsibility for providing material and placement in compliance with this specification. The Engineer/Purchaser reserves the right, at any time before final acceptance, to reject material not complying with the specified requirements.

3.5.1.4 The Contractor shall correct all deficiencies in earthwork which inspections and laboratory and field tests have indicated are not in compliance with this specification. The Contractor shall perform additional tests, at his expense, as may be necessary to reconfirm any noncompliance of the original work and as may be necessary to show compliance of corrected work.

3.5.1.5 The Contractor shall promptly correct errors or flaws in the work or material identified during construction and which prevent proper installation. The Contractor shall make immediate substitution of the noncomplying material or shall make field changes to make the noncomplying material acceptable. The correction or substitution shall be

performed at no cost to the Engineer/Purchaser.

3.5.2 Quality Assurance Program

3.5.2.1 The Contractor shall submit and finalize a detailed Field Quality Assurance (FQA) Program, within 30 days, from the date of award of the Contract according to the requirements of the specification. This shall include setting up of a testing laboratory, arrangement of testing apparatus/equipment, deployment of qualified/ experienced manpower, preparation of format for record, Field Quality Plan, etc. On finalising field quality plan, the Contractor shall identify hold points beyond which work shall not proceed without written approval from the Engineer.

3.5.2.2 Frequencies of sampling and testing including the methods for conducting the tests are given in Table-1. The testing frequencies set forth are the desirable minimum. Contractor shall perform additional tests as directed by the Engineer to satisfy him that the materials and works comply with the specifications.

3.5.3 Acceptance Criteria

Following Acceptance Criteria shall be followed:

a) All individual samples collected and tested should pass without any deviation when only one set of sample is tested.

b) For re-test of any sample, two additional samples shall be collected and tested, and both should pass without any deviation.

c) Where a large number of samples are tested for a particular test, then 9 samples out of every 10 consecutive samples tested shall meet the specification requirement.

d) Tolerance on finished levels for all cutting and filling areas at approved interval shall be 20 mm.

Table –1: Frequency of Sampling and Testing

Sr. No.	Nature of Test/ Characteristic	Method of Test	No. of Samples & Frequency of Test	Results
I.	**Suitability of Fill Materials**			
	a) Grain size Analysis	IS:2720 (Part IV)	One in every 2000 Cu.m. for each type and each source of fill material	Test for soil and sand
	b) Liquid limit and Plastic Limit	IS:2720 (Part V)	Subjected to a minimum of two samples.	Test for soil

Sr. No.	Nature of Test/ Characteristic	Method of Test	No. of Samples & Frequency of Test	Results
	c) Shrinkage Limit	IS:2720 (Part VI)	One in every 5000 Cu.m. for each type and each source of fill materials.	The frequency of Test shall be increased depending on the type of soil.
	d) Free Swell Index	IS:2720 (Part XL)		
	Chemical Analysis	IS:2720		
	a) Organic matter	Part XXII	One in every 5000 Cu.m.	Test for
	b) Calcium carbonate	Part XXIII	for each type and each	sand and
	c) pH	Part XXVI	Sources of fill materials.	soil.
	d) Total soluble sulphate	Part XXVII		
II.	**Standard Proctor Test**	IS:2720 (Part VII)	One in every 2000 Cu.m. for each type and each source of fill materials.	Test for soil for determining optimum moisture content, Dry density etc.
III.	**Moisture content of Fill before compaction.**	IS:2720 (Part II)	-do-	Test for soil
IV.	**Degree of compaction of Fill**		For area filling, one test for every 1000 Sq.m. for each compacted layer.	Test for soil
	a) Dry density by core cutter method Or	IS:2720 (Part XXIX)		
	Dry density in place by sand displacement method.		For area filling, one test for every 1000 Sq.m. area for each compacted layer.	
	b) Relative density (Density Index)	IS:2720 (Part XIV)	-do- i) & ii)	Test for sand
	c) Dry Density by Proctor needle penetration	Standard Practice	Random checks to be carried out for each compacted layer in addition to tests mentioned under IV (a) above.	Test for sand

3.6 RATES AND MEASUREMENTS

3.6.1 Rates

a) The item of work in the Schedule of Quantities describes the work in brief. The various items of the Schedule of Quantities shall be read in conjunction with the corresponding sections in the technical specifications including amendments and additions, if any. For each item in the Schedule of Quantities, the Contractor's rates shall include the activities covered in the description of the item as well as all necessary operations described in the specifications.

b) The Contractor's quoted rates shall include all minor details which are obviously and fairly intended and which may not have been included in the description in these documents but are essential for the satisfactory completion of the work. Quoted rates shall also include for taking all safety measures as required by Codal provisions, local regulations etc. and for execution to the satisfaction of the Engineer. Clearing all grass, vegetation etc. shall be inclusive in the rate.

c) The Contractor's quoted rate for each item shall be inclusive of providing all plant, equipment, men, materials, skilled and unskilled labour, making observations, surveying/ establishing the ground level and co-ordinates at location of each work by carrying levels from one established bench mark and distances from one set of grid lines furnished by the Engineer/Purchaser.

d) Rates shall also include for all testing, quality control requirements, arranging inspection, etc. The rates quoted shall be all inclusive of providing temporary works, wastage, overheads, profits and all such requirement. Nothing extra shall be payable over and above the quoted rates on these accounts. Rates shall include for any additional excavation and filling for all leads and lifts, including transportation to disposal area and bringing back for refilling with proper compaction as specified, if any, beyond the payment line.

e) No claims whatsoever shall be entertained if the detail shown on the 'Released for construction drawings' differ in any way from those shown on the bid/tender drawings.

3.6.1.1 Excavation in Soil/Rock

a) It shall be assumed that the Contractor has ascertained the nature of work involved, the type of materials to be excavated, ground water and surface water conditions

and conditions likely to prevail during high ground water conditions etc. No claims on these or any other accounts shall be entertained at a later date.

b) Over excavation/ overbreaks in rock/ soil done by Contractor, shall not be measured for payment. The quoted rate for excavation shall include making the over excavation with 1:2:4 or 1:1.5:3 cement concrete.

3.6.1.2 Excavation below Ground Water table:

a) Cost of dewatering measures to be taken for dewatering of rainwater, capillary / seepage water, springs, drains, etc. and diverting of ground surface water by manual / pumping method shall be included in the basic rate of excavation.

b) The lowering of the ground water table by well-point and/or deep well dewatering etc. shall be paid separately under relevant schedule of item in addition to the basic rate of excavation. The rate shall include all associated works so that all the activity from excavation up to completion of filling and testing can be executed in dry working condition.

3.6.1.3 Filling:

a) Rates quoted for filling using excavated /CNS materials shall include for all lifts.

b) In the event, filling materials to be brought from borrow pits, quarries, it shall be the responsibility of the Contractor to identify location of borrowpits and quarries, from where filling material shall be brought to site. The quoted rate shall include cost of excavated material, testing for conformance, royalties, taxes and duties, removal/cutting of suitable materials from stock piles/borrow areas/quarries, loading, carriage upto fill area, unloading, compaction, testing etc. all complete as per specifications including all leads and lifts.

c) Rate quoted for filling / CNS Material, filling operation shall include cost of water, dewatering and other incidental like rolling natural ground level etc. required such that the filling can be compacted in layers to the desired degree of compaction and in the dry condition.

d) For stone filling, payment shall be for the compacted volume of stone filling. No separate payment shall be due for filling interstices and for the 75/50 mm thick cushion provided with selected earth.

3.6.2 Measurements:

All measurements shall be in SI units.

a) Linear measurement shall be in meters (m) correct upto second place of decimal. Areas and volumes shall be calculated from the linear measurements and shall be in square meters and cubic metes respectively, rounded off to two decimal places. For rounding off, values in the third decimal place which are below 5 shall be ignored and those 5 and above shall be taken as 10.

b) For each item of work, the total quantity for payment at quoted rate shall be the lesser of actual quantity executed and that evaluated on the basis of the method of measurements given herein.

c) All measurements shall be recorded by the Contractor and duly certified/ approved by the Engineer.

d) The following works shall not be measured separately and allowance for the same shall be deemed to have been made in the description of main item:
   - Setting out works, profiles, etc;
   - Site clearance, such as cleaning grass and vegetation;
   - Unauthorized bettering or benching of excavation;
   - Forming (or leaving) ‘dead men’ and ‘tell tales’ in borrow pits and their removal after measurements;
   - Forming (or leaving) steps in sides of deep excavation and their removal after measurements;
   - Excavation for insertion of planking and strutting;
   - Unless otherwise specified, removing slips or falls in excavations;
   - Bailing out or pumping of water in excavation from rains;
   - Slinging or supporting pipes, electric cables etc, met during excavation.

3.6.2.1 Excavation:

a) Excavation shall be measured in cubic meters. The lateral dimension for excavation shall be the lesser of a) actual excavation outline and b) 0.3 m on each side outside concrete outline of lowest footing for depths upto 1.0m below existing grade and l.0m on each side outside concrete outline of lowest footing for depths more than l.0m below existing grade (with concrete dimensions determined from drawings).

b) For measurement purposes the sides shall be considered vertical with the lateral dimensions indicated above. Nothing extra would be payable for slope etc.

irrespective of whatever is provided. Excavation corresponding to sloped profile of sides of excavation, however, shall be payable only in case they are especially called for as payable in the 'Released for construction' drawings.

c) The limiting quantity of excavation will be evaluated based on the vertical distance from the existing grade level to the bottom level of lean concrete as shown on drawing or actual depth excavated, whichever is less.

d) For evaluating the quantity of excavation in rock, the Engineer shall be intimated by the Contractor as soon as rock level is reached. The decision as to whether rock is met or not shall be that of the Engineer and his decision shall be final and binding on the Contractor. Rock levels shall be recorded jointly by the Contractor and the Engineer. Measurements for rock excavation shall be taken separately for each item of work defined under excavation in rock in the Schedule of Quantities.

e) In excavation of areas where rock & soil are mixed or large boulders requiring blasting are met with in soil, blasted and excavated rock shall be suitably stacked separately & measured. Such measured quantum of rock shall be reduced by 30% to account for voids in stacks to arrive at quantity of rock actually excavated. Balance quantum out of total excavation shall be treated as excavation in soil.

f) The actual ratio of soil to rock shall be determined based on the above exercise. The measured quantities for soil and rock for payment purpose shall be arrived at following mode of measurement as per clause no 3.6.2.1 and the above ratio.

g) Over excavation/overbreaks in soil/rock done by the Contractor, shall not be measured for payment. Similarly the 1:2:4 or 1:1.5:3 mix cement concrete placed to make up the over excavation/break shall also not be measured for payment. Similarly the soil filling and compaction to make up the over excavation/break shall also not be measured for payment.

3.6.2.2 Excavation below Ground Water Table

a) The measurement for payment shall be based on volumetric calculation of soil excavated below the ground water table as approved by the Engineer.

b) Clause no 3.6.2.1 shall also be applicable for purposes of measurement of excavation below ground water table except that the vertical distance shall be measured below the ground water table prevailing at the location where excavation quantity is being measured.

3.6.2.3 Lift:

Lift shall be measured in meters as the vertical distance from the existing grade level to the level from which the wet/dry materials are excavated. The quantity for each range of lift shall be the quantity of materials excavated and measured as per excavation.

3.6.2.4 Carriage of Materials

a) Lead shall be measured as the distance carried of the wet/dry materials from the centre of the area of excavation to the corresponding centre of the area of stack/fill/disposal area of this material.

b) For purpose of calculation of lead, the excavation areas and disposal areas shall be divided into suitable blocks/areas of maximum dimensions of 50 m x 50 m or actual area of excavation/stack/ disposal whichever is less. The distance between the centre of excavation area and corresponding stack/fill/disposal areas shall be measured along the shortest possible haulage path and not necessarily the one actually taken. The decision of the Engineer in this regard shall be final and binding on the Contractor.

c) The quantity of materials to be considered for payment for carriage shall be least of (a) quantity of materials actually excavated, (b) quantity of excavation payable as per mode of measurements for excavation and (c) quantity of materials actually carted considering 30% voids.

d) For each range of lead distance given in the Schedule of Quantities, the quantities carted are calculated separately on the basis indicated above.

e) In any specific instance, the Engineer may require filling material to be obtained from borrow areas. Only in such instances, a lead for carriage of fill materials from identified borrow areas to location of filling shall be measured for payment. In such instances, the distance of carriage to be considered for payment shall be calculated on the same basis as above except that the distance shall be measured from the centre of borrow area (subdivided plot) to the location of filling as approved by Engineer in case of initial lead.

3.6.2.5 Filling

a) Quantity of fill shall be in Cu.m of the compacted volume of fill in place calculated on the basis of ;

- Levels recorded before and after filling

- Certified quantity of the excavation as per clause no 3.6.2.1
- After deducting concrete volume etc.

b) For stone filling, only the compacted volume of stone filling shall be measured. No separate payment shall be due for filling interstices with soil, sand, moorum and equivalent.

c) In any specific instance, the Engineer may require filling material to be obtained from borrow areas. Only in such instances, fill materials from identified borrow areas shall be measured for payment.

d) Quantity of CNS filling shall be same as per clause no 3.6.2.5 (i).

4.0 TECHNICAL SPECIFICATION FOR PROPERTIES, STORAGE AND HANDLING OF COMMON BUILDING MATERIALS

4.1 INTENT

4.1.1 The intent of this section of the specification is to specify the properties, storage and handling of common building materials, namely, coarse aggregates, cement, lime, water, sand, masonry units, reinforcement and structural steel.

4.1.2 Properties of the materials in general have been discussed in this section. Specific requirements of the materials have been stipulated separately under specification for relevant items of work.

4.2 GENERAL REQUIREMENTS

4.2.1 The work shall include, providing all necessary structures, adequate engineering supervision and technical personnel, skilled / unskilled labour etc. as required to carry out the entire work as directed by the Purchaser / Engineer to his complete satisfaction.

4.2.2 All materials proposed for use in the work shall conform to the requirements laid down in this section and also subject to the approval of the Purchaser / Engineer. After specific materials have been approved / accepted, the source of supply of such materials shall not be changed without prior approval of the Purchaser / Engineer. Approval of any material by the Purchaser / Engineer, shall not relieve the Contractor of his responsibility for the requisite quality and performance of the material used.

4.2.3 Any material considered to be sub-standard or not up to satisfaction of the Purchaser / Engineer, shall not be used by the Contractor and shall be removed from the site immediately.

4.2.4 Representative samples shall be procured by the Contractor and submitted to the Purchaser / Engineer for approval before bulk procurement. The representative samples shall be retained by the Purchaser / Engineer for future comparison and reference.

4.2.5 Materials, which shall be issued by the Purchaser / Engineer, shall be as specified elsewhere in the tender documents.

4.3 CODES AND STANDARDS

4.3.1 In the event of state, city or other local governmental bodies having requirements,

more stringent than those set forth in this specification, the former shall govern.

4.3.2 All applicable standards, acts, specifications, codes of practice, handbook referred to herein shall be the latest editions, including all official amendments and revisions. In case of discrepancy between this specification and those referred to herein, this specification shall govern. Any special materials used, but not covered here, shall conform to relevant Indian Standards, if any, or as specified by the Purchaser / Engineer for any special purpose.

4.3.3 Some of the applicable Indian Standards, Codes are referred to here below:

IS:226	Specification for Structural steel (standard quality).
IS:269	Specification for Ordinary Portland Cement (Grade 33)
IS:383	Specification for coarse and fine aggregates from natural sources for concrete.
IS:432	Specification for mild steel and medium tensile steel bars (Part 1&2) and drawn steel-wires for concrete reinforcement.
IS:455	Specification for Portland slag cement.
IS:1077	Specification for common burnt clay building bricks.
IS:1127	Recommendations for dimensions and workmanship of natural building stones for masonry work.
IS:1129	Recommendation for dressing of natural building stones.
IS:1542	Specification for sand for plaster.
IS:1566	Specification for hard-drawn steel wire fabric for concrete reinforcement.
IS:1597	Code of practice for construction (Part-I)of stone masonry, rubble stone masonry.
IS:1786	Specification for high strength deformed bars for concrete reinforcement.
IS:2062	Specification for structural steel (fusion welding quality).
IS:2116	Specification for sand and masonry mortars.
IS:2386	Testing of aggregates for concrete (Parts-I to VIII).
IS:2691	Burnt clay face bricks.
IS:3495	Methods of tests of burnt clay building bricks (Parts-I to IV).
IS:4031	Methods of physical tests for hydraulic cement.
IS:4032	Methods of chemical analysis of hydraulic cement.

IS:4082	Recommendations on stacking and storage of construction materials at site.
IS:7969	Safety code for handling and storage of building materials.
IS:8112	High strength ordinary Portland cement. (Grade 43)
IS:8500	Medium and high strength structural steel.
IS:12269	Ordinary Portland cement (53 grade).
IS:12330	Sulphate resisting Portland cement.
IS:12600	Low heat Portland cement
IS:12894	Fly Ash Lime Bricks

4.4 TECHNICAL REQUIREMENTS

4.4.1 MATERIALS

4.4.1.1 BRICKS

a) Burnt clay bricks, for general masonry work, shall conform to IS:1077 and for face brick work, shall conform to IS:2691. Fly ash lime bricks shall generally conform to IS:12894.

b) Bricks for general masonry work shall be table moulded / machine made, well burnt without being vitrified, of uniform size, shape, having sharp edges and cherry red colour. These shall be free from cracks, flaws or nodules of free lime and shall emit clear ringing sound (metallic sound) when struck together. These shall not show any signs of efflorescence either when dry or subsequent to soaking in water. Fractured surface shall show uniform texture free from grits, lumps, holes etc.

c) Unless otherwise specified, minimum compressive strength shall correspond to class designation 75 as per IS: 1077 with a minimum crushing strength of 75 kg./ sq.cm. for general masonry work. However, for non-load bearing walls, bricks pavements, etc., bricks of class designation 50 shall be used, wherever specified or shown on the drawings. Water absorption after 24 hours immersion shall not exceed 20% by weight for common bricks and 15% for face bricks.

d) On the basis of finish and dimensional tolerance, the bricks shall be classified as sub class A and B. Dimensional tolerance shall not exceed 3% and 8% of the sizes of common bricks for sub-class A & B respectively and 3% for face bricks. All bricks shall have rectangular faces and sharp straight edges. Maximum permissible

chippage for the face bricks shall be 6mm at the edges and 10mm for corners. The face bricks shall show no efflorescence after soaking in water and drying in the shade.

e) The size of the bricks used shall be either modular size as per IS:1077 or locally available conventional size as approved by the Purchaser / Engineer.

f) Each brick shall have the manufacturer's identification, marked clearly on the frog. The colour and texture of face bricks shall be limited to the range of samples submitted. Any brick not found upto the satisfaction of the Purchaser / Engineer shall be removed immediately from site by the Contractor.

4.4.1.2 STONES

a) All stones shall be from approved quarries. These shall he hard, tough, durable, compact grained, uniform in texture and colour and free from decay, flaws, veins, cracks and sand holes. The surface of a freshly broken stone shall be bright, clean and sharp and shall show uniformity of texture, without loose grains and free from any dull, chalky or earthy appearance. Stone with round surface shall not be used.

b) Stones showing mottled colours shall not be used for face work. Stone shall not absorb water more than 5% of its weight after 24 hours immersion. The type of stone shall be as specified or as shown on drawings and / or as instructed by the Purchaser / Engineer. Stones used for masonry work shall conform to IS:1597 (Part -1). No soft stone shall be used for masonry or for filling purpose.

c) Any stone not found upto the satisfaction of Purchaser / Engineer shall be removed immediately from site by the Contractor.

4.4.1.3 CONCRETE BLOCKS

Hollow cement concrete blocks shall conform to IS:2185. The blocks shall be uniform and of regular shape and size and shall meet the specified strength. Only full size blocks shall be used except when approved by Purchaser / Engineer for making up wall length at specific locations. The blocks shall be properly cured and shall have such texture that plaster will adhere to them. Free issue cement from Purchaser / Engineer shall not be used for making concrete blocks, unless otherwise specified.

4.4.1.4 LIME

Lime shall conform to IS:712. Hydrated lime shall be mixed with water to form a putty. This shall be stored with reasonable care to prevent evaporation of water for at least

24 hours before use. Quick lime shall be slaked with enough water to make a cream and then stored with reasonable care to prevent evaporation of water for at least seven days before use. Type of lime to be used for different purposes such as concreting, plastering, white washing etc. shall be according to the classification made here under:

Class-A Eminently hydraulic lime used for structural purposes.

Class-B Semi-hydraulic lime used for masonry mortars, lime concrete and plaster undercoat.

Class-C Fat-lime used for finishing coat in plastering, white washing, composite mortars, etc. and with addition of pozzolanic materials for masonry mortar

Class D Magnesium / dolomitic lime used for finishing coat in plastering, whitewashing, etc.

Class-E Kankar lime used for masonry mortar.

Class-F Siliceous dolomitic lime used for undercoat and finishing coat of plaster.

4.4.1.5 CEMENT

a) Generally, Ordinary Portland cement (OPC) shall be used unless specifically mentioned otherwise, grade of cement shall not be less than 43 conforming to IS 8112. In case the cement being supplied by the purchaser, the contractor shall satisfy himself at the time of taking delivery from the Purchaser / Engineer that the quality, quantity and freshness of cement are up to the specified standards. No complaint later regarding the quality of cement supplied by the Purchaser / Engineer shall be entertained.

b) In case the cement being procured and used by the contractor is found unsatisfactory, the Purchaser / Engineer reserves the right to suspend the work and send the samples of the cement to a testing laboratory for standard tests, at no extra cost to the Purchaser. The Contractor shall also have no claim for such suspension of work. Changing of type of cement within the same structure shall not be permitted without the prior approval of the Purchaser / Engineer.

4.4.1.6 WATER

Water shall generally meet the quality requirements as stipulated in IS: 456. Water used for cement concrete, mortar, plaster, grout, curing, washing of coarse aggregate, soaking of bricks, etc. shall be clean and free from injurious amount of oil, acids,

alkalis, organic matters or other harmful substances in such amounts that may impair the strength or durability of the structure. Potable water shall generally be considered satisfactory for all construction works, including curing. The Contractor shall carry out necessary tests in advance to prove the suitability of the water proposed to be used. As a guide, the following concentrations represent the maximum permissible values of impurities:

a) To neutralize 200ml sample of water, it should not require more than 2ml of 0.1 normal NaOH.
b) To neutralize 200ml sample of water, it should not require more than 10ml of 0.1 normal HCL.
c) Percentage of solids shall not exceed the following:

- Organic 0.02
- Inorganic 0.30
- Sulphate 0.05
- Chlorides 0.10
- Suspended matter 0.20

4.4.1.7 AGGREGATES

a) Aggregates mean both coarse and fine inert materials used in the preparation of concrete. Aggregates shall consist of natural sands, crushed stone and gravel from sources known to produce satisfactory aggregates for concrete and shall be chemically inert. Aggregates shall be hard, strong, and durable against weathering and of limited porosity. They shall be free from deleterious materials, which may cause corrosion of the reinforcement or may impair the strength and / or durability of the concrete. Total percentage of all deleterious materials, including coal, lignite, clay lumps, materials finer than 75 microns, soft fragments and shale but excluding mica shall not exceed 5%. However for crushed fine aggregate, total percentage of coal and lignite and clay lumps, shall be limited to 2%. Both coarse and fine aggregates shall conform to IS:383 with proper gradation, for concrete, shotcreting etc. unless otherwise specified.

b) Sample of aggregates for mix design and determination of their suitability shall be sent to the laboratory well in advance, of scheduled commencement of concrete /

masonry works. Sampling, testing and interpretation of test results shall be subject to the approval of the Purchaser / Engineer.

4.4.1.8 SAND

Sand shall be hard, durable, clean and free from adherent coatings of organic matter and shall not contain clay balls or pellets. The sand shall be free from impurities such as iron pyrites, alkalis, salts, coal, mica, shale or other laminated materials in such forms or quantities so as to affect adversely on hardening, strength, durability or appearance of mortar, plaster, etc. or to cause corrosion of any metal in contact with such mortar, plaster, etc. In no case, the cumulative percentage of impurities in sand shall be more than 5% by weight. All sand shall be properly graded. Unless otherwise directed by the Purchaser / Engineer, sand for masonry mortars shall conform to IS:2116 and sand for plaster shall conform to IS:1542. Sand, when used as fine aggregate, in concrete, shall conform to IS:383. For filling, medium grained sand (having fines less than 75 microns not exceeding 20%) shall be used.

4.4.1.9 Reinforcement Steel, Structural Steel (Including Embedded Steel) and Wire Mesh

a) All steel for reinforcement shall be clean and free from loose mill scales, dust, loose rust, oil, grease, paint or other harmful matters, which may affect its bond with concrete. Mild steel and medium tensile steel bars and hard drawn steel wire for concrete reinforcement shall conform to grade-1 (Fe-250) of IS:432 (Part1). High strength deformed steel bars shall conform to grade Fe 415/ Fe 500 / Fe500D of IS:1786. All steel bars shall be of tested quality. Actual grade and type of steel, to be used, shall be as specified or shown on drawings.
b) Structural steel (including embedded steel) shall be straight, sound, free from twists, cracks, flaws, laminations and all other defects. Structural steel shall be of tested quality conforming to IS:226, IS:2062 or IS:8500. Grade and type of steel to be used shall be as specified or shown on drawings.
c) Hard drawn steel wire fabric shall conform to IS:1566. Wire fabric shall be electrically cross welded.

4.4.2 Storage and Handling Of Materials

a) Generally, all materials shall he stacked and stored by the Contractor as described in IS:4082 unless otherwise mentioned and in a manner affording convenient access for identification and inspection at all times. The storage area and arrangements shall be subjected to the approval of the Purchaser / Engineer. Any

material rendered unserviceable in Contractor's custody, shall be replaced or repaired by the Contractor as determined by the Purchaser / Engineer.

b) All materials shall be stored in a way to prevent deterioration or intrusion of foreign matter and to ensure the preservation of their quality and fitness for the work. Any material which was deteriorated or has been damaged or is otherwise considered defective by the Purchaser / Engineer, shall not be used and shall be removed and the cost thereof, shall be realized from the Contractor's dues. The Contractor shall maintain up to date accounts of receipts, Issue and balance stocks of all materials.

c) Bricks shall not be dumped at site. These shall be stacked on dry firm ground in regular tiers even as they are unloaded to minimize breakage and defacement. Bricks of different class, selected for various categories of use in the work, shall be stacked separately. Each stack shall contain equal number of bricks, preferably not more than 3000.

d) Dressed stone for all facing, paving etc. shall be stored with special care to avoid defacement of edges and faces or damp and rust stains.

e) Lime shall be stored in weather-proof sheds. Lime, which has been damaged by rain, moisture or air slaking, shall not be used. If the lime is supplied as hydrated lime, it shall be stored in the same manner as cement.

4.4.2.1 CEMENT

a) Consignments of cement shall be stored as received and shall be consumed in the order of their delivery. Cement held in storage for more than ninety days shall invariably be tested and only if test results are satisfactory, the Purchaser / Engineer may consider permitting its use.

b) Different consignments of different types of cement i.e. OPC, PPC, PSC shall be stacked separately with clear identifiable stack number.

c) The cement shall be stored in dry, leak proof and weather proof enclosed sheds. Storage under tarpaulins shall not be permitted. The cement bags shall be stored well away from the walls and insulated from the floor using wooden planks etc., to avoid contact with moisture. The cement shall be stacked in easily countable stacks and in a place of easy access so as to facilitate proper inspection and removal on a first in first out basis. Not more than 15 bags shall be stacked in any tier to prevent lumping up under pressure. However, in stacks more than 8 bags

high, the cement bags shall be arranged alternately lengthwise and crosswise so as to tie the stacks together and minimize the danger of toppling over. The cement bags shall be gently kept to avoid leakage of cement from the bags. Substandard or partially set cement shall be immediately removed from the site as soon as it is detected.

d) The Contractor shall make his own arrangements for the storage of adequate quantity of cement as approved by the Engineer. Cement in bulk may be stored in bins or silos, which will provide adequate protection against dampness, contamination, etc. The bins or silos shall be cleaned periodically.

4.4.2.2 Coarse and Fine Aggregates/Sand

a) Coarse and fine aggregates shall be stacked separately. Contamination with foreign materials and earth during storage and while heaping the materials shall be avoided. Coarse aggregates shall be stacked in layers not exceeding 120 cm in height such that coning and segregation do not occur. Each layer shall cover the entire area of the stockpile before succeeding layers are placed. Segregated aggregates from stockpile shall be rejected.

b) Aggregates shall be stored on brick soling or an equivalent platform so that they do not come in contact with dirt, clay, grass or any other injurious substance, at any stage. For lifting aggregates from stockpiles, rakers shall be used. Aggregates of different sizes shall be kept in separate and easily measurable stacks. If so desired by the Purchaser / Engineer, aggregates from different source shall be stacked separately with proper care to prevent intermixing.

4.4.2.3 Reinforcement and Structural Steel (Including Steel Required For Embedment)

a) Reinforcement and Structural steel (including steel required for embedment) shall be stored consignment wise and size wise, above the ground by at least 150mm and protected by a suitable cover or as desired by the Purchaser / Engineer. The steel shall be protected from rusting, oil, grease and distortions. The reinforcing steel shall be coated with cement wash before stacking to prevent scale and rust, in areas having accelerating corrosion effect like marine atmosphere. The stacks shall be easily measurable. Steel needed for immediate use only shall be removed from storage. Fabricated steel shall be carefully stored to prevent damage, distortion, corrosion and deterioration.

b) Reinforcement shall be stored according to the diameter, grade and length in such a place as to permit easy approach for inspection and identification.

c) The area shall be such that water does not accumulate and reinforcement does not get distorted or corroded. It shall not be stacked directly over ground or near any harmful materials. It shall be cleaned of excessive rust before use as desired / directed by the Engineer.

d) Steel plates of different specifications shall be stacked separately. Steel of IS: 2062 and IS: 8500 quality shall be given a grade wise, distinctive identification mark. Passage and space between the stacks shall be sufficient for rigging operations.

4.5 TESTING

All materials provided by the Contractor shall be tested for conformity with respect to the relevant specification and the test results shall be submitted to the Purchaser / Engineer for acceptance. In addition to above, the Contractor shall carryout the relevant tests at site as specified under different items of work and as per approved field quality plan.

5.0 SITE DEVELOPMENT WORKS/ AREA GRADING

5.1 GENERAL

This specification covers all clearing, grubbing, excavating, area filling, grading and compacting soils for areas designated on the drawings. The work shall include clearing and grubbing, stripping and storage of top soil, excavation, blasting (if required), hauling, dumping and spreading of soil, undercutting to remove unstable soil areas, compaction of existing soil surfaces and bottom of excavated areas to receive fills, compacting excavated areas for sub grade, placing and compacting soils in fills, dealing with surface water, dewatering to keep excavated areas and areas to be filled dry, final grading of designated areas, disposal of unsuitable and excess excavated materials and incidentals thereof.

All materials required for the work shall be of best commercial variety and as approved by the Engineer.

5.2 CLEARING AND GRUBBING

The area to be excavated or filled shall be cleared of fences, trees, logs, stumps, bush, vegetation, rubbish, undergrowth/ roots, slush etc. and shall be disposed of in a manner and method satisfactory to Engineer, and Government Authorities having jurisdiction. Trees upto 300mm girth shall be uprooted. The trees above 300 mm girth that are to be cut, shall be approved by the Engineer and then marked. Felling of trees shall include taking out roots upto 600 mm below ground level or 150 mm below formation level whichever is lower. After the tree is cut and roots taken out the pot-holes formed shall be filled with good earth in 250 mm layers and consolidated unless directed by the Engineer otherwise. The trees shall be cut in suitable pieces as instructed by the Engineer.

Before earthwork is started, all the spoils and unserviceable materials and rubbish shall be burnt or removed from the site to approved disposal areas as may be specified. Ash shall be spread or removed. Useful materials, saleable timber, firewood, etc. shall be the property of the Owner and shall be stacked properly at the worksite in a manner as directed by the consultant’s representative.

5.3 EARTHWORK IN EXCAVATION

Before commencement of excavation the existing ground surface shall be cleared in accordance with Clause no. 5.2

All excavation shall be done to the minimum dimensions as required for safety and working facility. Prior approval of the Engineer shall be obtained by the Contractor, in each individual case.

Prior to starting the excavation, the ground level at the location shall be checked jointly with the Engineer.

The rough excavation may be carried upto a maximum depth of 150 mm above the final level. The balance shall be excavated with special care. If directed by the Engineer, soft and undesirable spots shall be removed even below the final level.

5.3.1 Excavation in Ordinary Soil, Hard Soil and Soft and Decomposed Rock

The excavation in ordinary soil, hard soil, soft and decomposed rock will be carried out as per the approved proposal, modified and corrected where necessary by the Engineer. The work will be carried out in a workmanlike manner without endangering the safety of nearby structures/services or works and without causing hindrance to other activities in the area. As the excavation reaches the required dimensions, lines, levels and grades, the work will be checked by the Engineer thoroughly and the balance work will be carried out carefully to avoid any over-excavation. On completion, the work will be finally checked and approved by the Engineer. In certain cases, where deterioration of the ground, upheaval, slips, etc. are expected, the Engineer may order to suspend the work at any stage and instruct the Contractor to carry out the balance work just before the foundation work of the structure can be started.

5.3.2 Excavation in Hard Rock

In case, where excavation, both in ordinary soil and hard rock, are involved, the ordinary soil comprising of soft, hard and dense soils (including laterite formations) and rock including weathered rocks, lateritic rocks, etc. which can be excavated without blasting, shall be completely stripped off. Further work in hard rock shall be resumed after clearance from the Engineer.

Personnel deployed for rock excavations shall be protected from all hazards such as loose rock/boulder rolling down and from general slips of excavated surfaces. Where the excavated surface is such that it is not stable against sliding, necessary supports, props, bracings or bulkheads shall be provided and maintained during the period of construction. Where danger exists of loose rock/boulder falling from the excavated surfaces deeper than 2 meters, steel mesh anchored to the lower edge of excavation

and extending over and above the rock face, adequate to retain the dislodged material shall be provided and maintained.

In case where blasting, though otherwise required, is prohibited for any reasons, the excavation shall be carried out by chiselling, wedging or any other approved method.

5.4 EARTHWORK IN FILLING

5.4.1 Area Filling for Grading

The material to be used for area filling shall be selected material capable of being compacted to the requirements stated herein below and approved by the Engineer, obtained directly from excavation for area grading, from nearby areas where excavation work by the same agency is in progress, from temporary stacks of excavated spoils or from borrow pits in selected areas designated/approved by the Engineer.

Where excavated material is mostly rock, the boulders shall be broken into pieces not longer than 150 mm size, mixed with properly graded fine material consisting of murum or earth to fill up the voids and the mixtures used for filling.

If any material is rejected by the consultant/owner, Contractor shall remove the same forthwith from the site at no extra cost to the owner. Surplus fill material shall be deposited/ disposed off as directed by the consultant/owner after the fill work is completed.

No temporary / permanent deposit or of any kind of material resulting from clearing and grading shall be permitted in the approach to roads, streams, ditches, drainage ditches and any other position which may hinder the passage and/or the natural water drainage.

No earthfill shall commence until surface water discharges and streams have been properly intercepted or otherwise dealt with as directed by the Engineer.

Before commencement of area filling the existing top soil shall be removed upto a minimum depth of 150 mm, or more, as directed by the Engineer in order to clear the surface of undesirable materials. After this the filling operation shall be performed with earth in layers not exceeding 250 mm, loose thickness. Successive layers shall not be placed until the layer under construction has been thoroughly compacted to the specified requirements as given below and got approved by the Engineer

a) Each layer of earth of cohesive in nature shall be compacted to 90% of proctors dry

density unless otherwise permitted/directed by the Engineer.

b) Each layer of earth of non-cohesive in nature shall be compacted to minimum 80% relative density unless otherwise permitted/directed by the Engineer. Each shall be compacted with approved machine (mechanical plant) and usually manual compaction shall not be allowed unless specifically permitted by the Engineer. The original ground formation and each fill layer shall be compacted by rollers as described below with a maximum of six posses of 8/10 tonne roller.

- When the optimum moisture content of soil is relatively high, a pneumatic tyred roller (type pressure 3.0 - 3.5 kg/sq.cm) shall be considered to give better performance for mechanical compaction.
- When the optimum moisture content of soil is relatively low, a vibrating roller shall be considered to give better performance for mechanical compaction.

Since the degree of compaction depends on the moisture content of the soil, a close watch shall be kept on this aspect and corrections done to optimise the moisture content. The adequacy of the compaction and moisture content of the soil shall be determined by performing field density tests and other tests as and when directed by the Engineer and shall conform to the stipulations laid down in IS:4701.

The cohesionless soil to be used for area filling, should be placed in fully saturated condition to obtain the maximum possible density. The saturation moisture content shall be determined by laboratory tests prior to commencement of work.

Field compaction test shall be carried out at different stages of filling and also after the fill to the entire height has been completed.

When density measurements reveal soft areas in the construction, further compaction shall be undertaken at the contractor's cost as directed by the Engineer. If the required compaction is then not achieved the material in the soft area shall be removed and replaced by approved material and compacted in accordance with this specification all to the contractor's account.

The fill shall be carried out to such dimensions and levels as indicated on the drawings after the stipulated compaction. The fill will be considered as incomplete if the desired compaction has not been obtained.

If so specified, the rock as obtained from excavation may be used for filling and leveling to indicated grades without further breaking. After rock filling to the

approximate level, the void in the rocks shall be filled with finer materials such as earth, broken stone, etc. and the area flooded so that the finer materials fill up the voids. Care shall be taken to ensure that the finer fill material does not get washed out. Over the layer so filled, a 100 mm thick mixed layer of broken material and earth shall be laid and consolidation carried out by a 12 tonne roller. No less than 12 passes of the roller shall be accepted before subsequent similar operations are taken up.

5.4.2 Filling in Disposal Areas

Excavated materials if not used in area filling, will be disposed of in designated disposal areas as directed or as indicated in the drawings. The earth shall not be dumped haphazardly but shall be spread in horizontal layers not exceeding 500 mm in thickness and nominal compaction done to the satisfaction of the Engineer.

Earthmoving machinery including dumpers, dozers and trucks shall be allowed to ply over the fill to permit compaction to take place.
In wide areas rollers may be employed and nominal compaction done to the satisfaction of the Engineer.

5.4.3 Compaction Control

The density of each layer of compacted soil shall be ascertained by testing a number of samples. For this purpose the necessary arrangements for soil testing at the site shall be made by the Contractor in accordance with these specifications and as directed by the Engineer.

The Contractor shall arrange the provision of the field laboratory including the testing equipment and a suitable motor vehicle. He shall also supply all consumable materials such as kerosene, spirit, gas and sample bags as required.

All soil testing is to be carried out by a competent and suitable qualified engineering testing firm. The Contractor is to obtain the Engineer's approval for the firm to be used. The Contractor may undertake this work with the Engineer's approval.

All density testing shall be carried out on a lot by lot basis. A lot shall be considered to be a portion of work which is essentially homogeneous with respect to material type general appearance response during compaction, moisture condition during compaction, compaction process and state of underlying material.

All fill testing shall be carried out in accordance with the recent editions of relevant

Indian Standards. The chainage and the off-set from the centre line of the fill of each test sample shall be recorded and presented along with the test results.

Each test lot shall be classified as cohesionless or cohesive. The classification shall be determined by the Engineer based upon particle size distribution. Cohesionless fill shall have 10% or less by mass of particles finer than 0.075 mm. Otherwise fill shall be treated cohesive.

For cohesionless fill material, a representative laboratory sample obtained from three field samples from each test lot shall be tested to determine its maximum and minimum dry density. These reference values of dry density shall be used to compute the density index (relative density) of each of the field density test samples taken from the test lot.

For cohesive fill material, a representative laboratory sample obtained from three field samples from each test lot shall be tested to determine its maximum dry density and optimum moisture content (OMC). These reference values of dry density and moisture content shall be used to compute the dry density ratio of each of the field density test samples taken from that test lot.

The degree of compaction shall be determined by considering the mean density of the samples in each test lot. The mean dry density shall be equal to or exceed the minimum specified density. In no individual case shall density be less than the minimum value specified by more than 2 percent, otherwise further rolling shall be done at the appropriate locations.

The contractor shall lay a further layer or fill only after compaction or a particular layer has been found and approved by the Engineer.

5.5 SOIL TESTING

The following tests shall be undertaken by the Contractor and results and reports shall be submitted to the Engineer for approval. Test failures are to be immediately notified to the Engineer, otherwise results to be submitted within 24 hours of testing. Each layer of material shall be tested for compaction.

Each layer is to be tested in a manner that is representative of its full depth. The Engineer may at his discretion instruct the Contractor to increase or decrease the frequency of testing.

a) Minimum one test per 500 cu.m. of soil coming out of the borrow pits for

determination of natural moisture contents in order to evaluate how far the natural moisture content tallies with the optimum value and whether further addition or reduction of water content would be necessary. Test to be done in accordance with IS : 2720 (Part-II).

b) Minimum two sets of laboratory tests per 8000 cu.m. of soil coming out of the borrow pits for determination of dry density at optimum moisture content. Test to be done in accordance with IS : 2720 (Part-VII, XIV, XXVIII, XXIV) as applicable.

c) Minimum two sets of test per 500 cu.m. of loose fill for determination of moisture content just prior to compaction of area filling. Test to be done in accordance with IS: 2720 (Part-II).

d) For each compacted layer, minimum one test per 2000 sq.m. of compacted area for determination of moisture content and dry density.

e) Minimum two tests per 8000 cu.m. of soil for determination of soil classification. Test to be done in accordance with IS: 2720 (Part-IV).

f) Minimum 10 (ten) density measurements shall be plotted to establish moisture content-dry density relationship.

6.0 FOUNDATION SYSTEM AND SOIL DATA

6.1 SOIL DATA

The detailed topographical survey, geotechnical investigation along with the report shall be required to be carried out by the Bidder for establishing the sub-soil conditions and to decide the type of foundations for the structures envisaged in the proposed plant, construction methods, any special requirements/ treatment called for/ remedial measures for sub-soil/ foundations etc. prior to commencement of detailed design/ drawings. The grading, leveling and filling shall be done based on investigation to make the finished graded level as specified in General layout plan.

The bidder shall also report the existing facilities/earth pits/trenches/OWS manholes with the coordinates from a fixed reference point and the same to be included in the report.

After the submission of the survey report and geotechnical investigation report, BOQ for the civil works will be finalised. The survey report shall also include the present RL levels of the project site w.r.t. the existing plant RL levels, along with other details mentioned above. The geotechnical investigation shall also include the recommended bearing capacity of soil at RL 20, RL 19.5, RL 19, Rl 18.5, along with respective calculations. Atleast one borehole is required, the location of which shall be approved by MRPL/LTSL.

The correct assessment and understanding of the existing subsoil condition is to be done by the Bidder. However, the successful Bidder will have to carry out his own soil investigation at no extra cost to the Owner. All designs will be based on successful Bidder’s soil report, approval of which is to be taken from the consultant/Owner.

6.2 GROUND IMPROVEMENT

At detailed engineering stage based on the detail geotechnical investigation recommendations, the actual ground improvement technique needs to be finalized if found suitable and approval shall be obtained from the consultant/Owner prior to implementing any ground improvement.

Stabilization of soft clay layers below the finished grade levels shall be carried out using suitable ground improvement measures based on the geotechnical investigation report and recommendations. Bidder shall submit the detail proposal including design, verification and testing for such stabilisation and obtain necessary approval from

consultant/Owner. Bidder has to carryout grading works to maintain the specified finished grade levels within the battery limits of the present project. The exact amount of filling and levelling works shall be based on the foundation levels of the plant and equipment during detailed engineering.

6.3 FOUNDATION SYSTEM

6.3.1 General Requirements

a) All structures/ equipment shall be supported either on suitable open foundations as required based on geotechnical investigation report.

b) All the foundations shall be designed in accordance with provisions of the relevant parts of the latest revision of Indian Standards.

c) Foundations shall not encroach into existing facilities.

d) Necessary shoring and safety barriers, to protect the existing services and facilities from damage or interference during the execution of the works. It shall be ensured that all foundations of a particular structure / building / equipment shall rest on one bearing stratum.

e) In case of rock, for identifying the sub-strata for founding purposes, the Bidder shall depute/post an experienced Engineering Geologist at site to ensure that the foundation rest in the specified strata. A write up for identifying the strata in conformance to the values considered for the design shall be submitted by the bidder for consultant's/Owner's approval.

6.3.2 Open Foundations

In case open foundations are adopted, following shall be adhered to

a) Open shallow foundations shall be provided for lightly loaded structures. Allowable bearing pressure shall be as per approved geotechnical investigation report.

b) The settlement would be detrimental for foundations of most of the structures if shallow foundations are proposed. Hence, to overcome this problem of service stage settlements, stabilization of sub-soil layers shall be carried out by suitable ground improvement techniques i.e. Stone columns, Sand drains or vertical band drains with appropriate surcharge loading. This is basically to provide more drainage facility to the entrapped water in the Soft Clay Layer to quicken consolidation process as a pre-construction activity such that during service condition, undue and excessive settlements are avoided. In case, open foundations

with ground improvement are adopted, it shall be ensured that long term settlements are within the limits specified by IS 1904 and necessary verification testing shall be carried to demonstrate the suitability of such open foundations.

c) The general site history suggests that ground water table is high within the plant site and presence of sub-soil water table at shallow depth requires special attention while constructing Shallow Foundations.

d) For open foundations, the total permissible settlement and differential settlement shall be governed by IS: 1904/ IS: 13063 and from functional requirements, whichever is more stringent. However, total settlement shall not exceed the values as per system requirements and / or relevant IS codes.

7.0 CEMENT CONCRETE WORKS

7.1 GENERAL

This specification covers all the requirements, described hereinafter for general use of Plain and Reinforced Cement Concrete work in Structures and locations, cast-in-situ or precast, and shall include all incidental items of work not shown or specified but reasonably implied or necessary for the completion of the work.

All provisions of IS:456 shall be complied with unless permitted otherwise. For any particular aspect not covered by this Code, appropriate IS Code, specifications and/or replacement by any International Code of practice as may be specified by the Engineer shall be followed. All codes and Standards shall conform to its latest revisions.

7.2 GENERAL REQUIREMENT

All materials whether to be incorporated in the work or used temporarily for the construction shall conform to the relevant IS Specifications unless stated otherwise and be of best approved quality.

7.2.1 Cement

Generally cement shall be 53 grade and 43 grade ordinary Portland Cement conforming to IS 12269 & IS 8112 respectively. In special cases any of the following type of cement may be permitted or directed to be used with prior approval by the Engineer:

a) Rapid hardening Portland Cement conforming to IS-8041

b) Portland slag cement conforming to IS-455

c) Portland Pozzolona Cement (fly ash based) Conforming to IS- 1489 (Part -1)

d) Portland pozzolona Cement (calcined clay based) conforming to IS-1489 (Part-2)

e) Hydrophobic Cement conforming to IS-8043

f) Low heat Portland Cement conforming to IS: 12600

g) Sulphate Resisting Portland Cement conforming to IS-12330

7.2.2 Concrete Grade

The following grades of concrete as per IS 456 shall be adopted for the type of structures noted against each.

Grade M10 (1:3:6): Foundation below brick wall, blinding layer below foundations,

trenches and underground structures, minimum thickness of the layer shall be 75 mm.

Grade M30: Base plate encasement, pavement around building including plinth protection work, encasement of structural steel work, etc.

Grade M30: Ground floor slabs, paving etc.

Grade M30: All RCC members except where other grades are specified e.g. Foundation and super structure, grade beams, pedestals, roof slabs, cable and pipe trenches, etc. Equipment foundations, Material handling and storage structures

In case required from design consideration, Bidder may use higher grade of concrete at no extra cost to Owner. For concrete below ground level, protection against sulphate / chloride shall be adopted as per recommendations of soil investigation report.

Sulphate resistant cement, conforming to IS-12330, shall be used in concrete mixes when concrete is exposed to aggressive soil/water conditions.

From Durability considerations the minimum cement content and maximum water-cement ratio shall be as per the table below. However, the maximum cement content shall not exceed 450 kg/m^3.

Exposure Condition	**Reinforced concrete**		
	Grade of Concrete	**Minimum Cement content (kg/m^3)**	**Maximum free water-cement ratio**
Severe	M25	350	0.47
	M30	375	0.45

7.2.3 Aggregates

Aggregates shall be natural or crushed gravel or crushed rock and free from deleterious material. It shall comply with the requirements of IS-383. All fine and coarse aggregate shall be tested for susceptibility to Alkali Silicate reaction in a laborator approved by the Engineer.

The concrete supplier shall obtain from the aggregate producer, or otherwise provide current test, examination, inspection reports performed and certified by an approved laboratory for submittal to the Engineer.

a) Coarse Aggregate

Aggregate of sizes ranging between 4.75 mm and 150 mm will be termed as Coarse Aggregate. Only Coarse Aggregate from approved quarries and conforming to IS:383 will be allowed to be used on the works. Aggregates shall be washed to make it free from deleterious materials, if necessary.

The grading of coarse aggregates by seive analysis shall be as per IS:383. If by the analysis the deficiency of a particular grain size is found, which could affect the density of the concrete, the Engineer may ask the contractor to avoid such quantities of aggregate of the particular size or and such quantity of aggregate of any particular size to achieve the required grading as per IS:383.

b) Fine Aggregate

Aggregate smaller than 4.75 mm and within the grading limits and other requirements set in IS:383 is termed as Fine Aggregate or Sand. Only Fine Aggregate from approved sources and conforming to the above IS Specification will be allowed to be used on works. In certain cases there may be two types of sand , one very fine and the other very coarse. In such cases , the two types shall be combined to meet the requirements of a particular zone of IS:383. In all cases, the preferred zone is Zone - II. In certain cases crushed stone sand may be added to natural sand in order to achieve the required grading. Crushed stone sand alone may be used only with the approval of the Engineer.

- Grading and Testing of Aggregates

  Tests are to be executed in accordance with IS:2386. The grading of fine aggregate for concrete work shall comply with the requirements of IS:383.

  The grading of the aggregates should be such as to produce concrete of the specified proportions which will work readily into position without segregation and without the use of excessive water content. The grading should be controlled throughout the work so that it conforms closely to that used for the trial tests.

  A check on the moisture content of sand should be made at least once a day before concreting. The amount of water to be added to the concrete mix should be adjusted accordingly. Any washing, screening, classifying and other operations on the fine aggregate required to meet this requirement shall be done.

- Storage and Handling of Aggregates

  Adequate storage shall be provided for each aggregate. The aggregate storage area shall be on concrete pavement sloped to drain excessive moisture. The aggregate storage area shall provide bulkheads to separate piles and protect against wind blown contaminants. Provision shall be made to shade and sprinkle the aggregates with potable water.

  Aggregate stockpiles shall be built in successive horizontal layers not exceeding 1 m in thickness, with each layer being completed before the next is started.

7.2.4 Concrete Admixtures

a) Use of Concrete Admixtures

Admixtures used in concrete shall conform to the appropriate specification and requirements as indicated below:-

- Air entraining admixtures shall conform to IS: 9103.
- Water reducing and retarding admixtures shall conform to IS:9103. Accelerating admixtures shall not be used.
- High range water reducers shall be naphthalene-sulfonated polymer based materials. No admixtures containing chlorides shall be used.
- Chemical admixture suppliers shall provide certified test reports with each shipment indicating compliance with the appropriate specification. The test reports shall include the chloride content of the admixture, specific gravity and solids content.

Admixtures used in production of concrete shall be the same as used in establishing the required concrete mix and shall be used in accordance with the manufacturer’s recommendations.

b) Accelerating and Retarding Admixtures

Such additives shall only be used in case of necessity and after obtaining the written approval of the Engineer.

c) Plasticisers and Air - entraining Admixtures

Plasticisers and air entrainers are intended to reduce bleeding of free water at the surface. It shall only be used after the written approval of the Engineer and in accordance with the manufacturer’s recommendations.

7.2.5 Water

Water for use in Concrete shall be clear and free from injurious oils, acids, alkalis, organic matter, salt, silts or other impurities. Normally potable water is found to be suitable. Generally, IS: 3550 will be followed for routine tests. Acceptance test for water shall be as per IS: 3025, and Table-1 of IS: 456.

7.2.6 Reinforcement

The reinforcement steel shall be any of the following types, depending on the design requirement:

High strength deformed bars grade Fe 415 & Fe 500 conforming to IS: 1786.

Mild steel plain bars conforming to IS: 432 (Part-I), for specific uses, wherever indicated in drawings (Fy = 250 MPa).

Mild steel and medium tensile steel bars and hard drawn steel wire shall conform to grade-1 of IS: 432 (Part-I). Welded wire fabric shall conform to IS: 1566.

All reinforcement steel shall be corrosion resistant. Coating and painting system for reinforcement shall be as per clause 7.12.

7.3 CONCRETE MIXES

General Description and Proportions and Mixing

The mix proportions are to be determined by proper mix design based on the requirements for strength, workability and the particular site in which the concrete is to be placed. The mix design shall be based on the principles of IS: 456.

Concrete aggregates and cement shall be proportioned and batched by weight. Water and liquid additives shall be proportioned. If the Bidder wishes to use cement in bulk, his method of obtaining the correct proportions of cement shall be approved by the Engineer before use.

Trial Mixes

Before concreting commences, the Bidder shall make trial mixes to determine the mix proportions required to produce the strengths specified for each class of concrete and for each degree of workability required to allow placing, transporting and compacting of the concrete with the equipment he proposes to use in any particular situation. Only materials which the Bidder intends to use for concreting (including all admixtures) shall be used in the trial mixes.

Test cubes from trial mixes shall be made and tested in accordance with IS:516.

Trial Mixes and Field Tests

Sufficient laboratory trial mixes shall be effected to show that concrete complies fully with the specified performance criteria. The following tests are to be included:-

a) Air content < 1%

b) Slump: Piles 170 + 25 mm, regular work 80 + 20 mm as per IS: 1199.

c) Fresh and hardened concrete densities

d) Field trial mixes are to be carried out under full-scale site conditions as per IS: 4925 (for structural concrete only).

e) Where directed by the Engineer, concrete incorporating reinforcement details shall be cored to assess stratification of mixes. Cores of 150 x 200 mm (Dia. and length) are to be used.

f) Each trial mix shall have 9 x (150 x 150 mm) cubes taken to measure 24 hours/7 days and 28 day compressive strengths. These trials shall be run for three consecutive days (for structural concrete only).

g) At least 3 x sets of field trials shall be tested according to the provisions laid down in laboratory testing.

h) The average 28 day characteristic strength for trial mixes shall be higher by 10 N/mm2 than that for cubes taken in the field. Failure to comply shall result in the mix having to be re-designed.

i) All test results will have to be complied before approval can be given.

Consistency of Concrete

The amount of water used in the concrete shall be adjusted as required to ensure such a consistency that it can be readily transported, placed and compacted without segregation of the materials or bleeding of free water at the surface. Addition of water to compensate for stiffening of the concrete before placing shall not be permitted. Consistency of the concrete shall be checked by slump tests measured in accordance with IS-1199 and shall comply with requirements of IS-456.

Mixing of Concrete

The cement and aggregate shall be thoroughly mixed in a batch-type pull mill mixer.

The capacity of the mixer shall not be less than 1 (one) cubic meter and the total capacity of the batching mixing plant shall be such to accommodate the various concrete quantities to be cast in a continuous way and shall comply with the requirements of IS: 456, IS:1791 and IS:12119.

The water shall not be added until all the aggregate and cement are in the drum. Mixing shall continue until the concrete is uniform in color and for not less than 2 (two) minutes after all the materials and water are in the drum.

Laboratory

The Bidder shall establish and maintain a field laboratory on the site and this laboratory shall be available at all time to the Engineer.

The laboratory must have qualified technicians to carry out all tests and must be adequately equipped to ensure that all necessary testing work can be carried out in compliance with the standards.

7.4 WATER-CEMENT RATIO

The choice of water-cement ratio in designing a concrete mix will depend on -

a) The requirement of strength.

b) The requirement of durability.

a) Strength Requirement

In case of 'Design Mix Concrete', the water-cement ratio of such value as to give acceptable test results as per minimum design based on IS 456, IS 10262, will be selected by trial and error. The values of water-cement ratios for different grade and mix designs will have to be established after conducting sufficiently large number of preliminary tests in the laboratory to the satisfaction of the Engineer.

In case of nominal mix concrete, proportions for different grades of concrete is specified in Table-9 of IS:456 and no tests are necessary. The acceptance test criteria for nominal mix concrete shall be as per IS:456.

b) Durability Requirement

Table-5 of IS:456 gives the maximum water-cement ratio permissible from the point of view of durability of concrete subjected to adverse exposure to weather, sulphate attacks, and contact with harmful chemicals. Impermeability may also be an important consideration.

7.5 STRENGTH OF CONCRETE

Testing of Fresh Concrete by Means of Test Cubes

All test cubes shall be made and tested for compressive strength in accordance with IS: 456, IS:516 and IS:1199.

The minimum required strength for different classes of concrete is as shown in clause "General description and proportions and mixing" as stated above.

The grade of concrete required will depend partly on the particular use and the characteristic strength needed to provide the structure with adequate ultimate strength and partly on the exposure conditions and the cover provided to any reinforcement.

A minimum of four test samples (of six test cubes each) shall be taken on each concreting day (from the same mix) and for at least each 40 m3 of concrete mixed. At least one sample shall be taken for each shift.

For columns, beams and cantilevers seven (7) cubes for every 15 m3 of concrete poured shall be taken. The concrete for test samples shall be taken directly from the concrete mixer and shall be handled (vibrated etc) under similar conditions to those prevailing during the construction. The moulds for the test cubes shall be made of steel. Tests shall be carried out in an approved laboratory.

The strength level of each type and each strength concrete will be evaluated separately and the concrete strength will be considered satisfactory provided the requirements of IS 456 are compiled with.

Testing of concrete in structures

The types of tests described hereinafter are applicable to the finished parts of the structures. They may be used in routine inspection and for quality control, as directed by Engineer.

Type of tests:

a) Cutting cores: The procedure used shall comply with the requirements of IS: 516 or an approved equivalent standard.

b) Gamma radiography: The testing shall be carried out in accordance with the requirement of IS: 13311 Part 1 or equivalent.

c) Ultrasonic test: Such tests may be used to obtain approximate indications of the strength of the concrete in the structures (IS: 13311 Part 1).

d) Electromagnetic cover measuring devices: Such tests may be used to verify the position of the reinforcement and shall be in accordance with the requirements of design (IS:13311 Part 1).

e) Rebound hammer test: Such tests may be used to obtain approximate indications of the strength of the concrete (Ref. IS: 13311, Part 2).

f) Load tests of structures or parts of structures: If the results of the above mentioned check tests show that the quality of the materials is inadequate or if other defects are revealed, the Engineer may require a loading test to be made.

For the purpose of testing floors, roofs and similar structures and their supports, the test load shall be equivalent to the sum of the characteristic dead load and one-and-a quarter times (1.25 times) the characteristic imposed load for a period of 24 hours which the works or part thereof to be tested have been designed.

Wherever certain procedures for testing of parts in structures (e.g. piles) are required by standards or codes of practice, these are to be followed. All tests must be conducted in the presence of the Engineer.

If within 24 hours of removal of the imposed load, the structure does not recover at least 75% of the deflection under superimposed load, the test may be repeated after a lapse of 72 hours. If the recovery is less than 80%, the structure shall be deemed to be unacceptable.

If the result of the test is not satisfactory, the Engineer shall instruct that the part of the works concerned be taken down or cut and reconstructed to comply with this specification. The Bidder shall at his own cost take down or cut out and reconstruct the defective work.

The Engineer may require other tests to be made. Number of samples, tests and types will be as per Engineer requirements.

All the costs for the above mentioned tests shall be borne by the Bidder.

7.6 TRANSPORT OF CONCRETE

Immediately after mixing, the concrete shall be conveyed to the place of use as rapidly as possible using methods which will prevent the segregation, loss or contamination of materials. The concrete shall be placed and compacted within 90 minutes of the addition of water to the mix. Any concrete left unplaced after this time shall be rejected and removed from the site.

The concrete shall be transported in dumpers or trucks. Before using concrete pumps, placer pipelines, chutes or spouts it is necessary to have the written approval of the Engineer.

The Bidder shall obtain permission at least 24 hours in advance of any concrete pour.

7.7 CONCRETING OPERATIONS

Inspection Prior to Concreting

All concreting methods shall be subject to the approval of the Engineer.

Concrete placing shall not be started until the Engineer has approved all preparation of forms, reinforcement, joints and all mixing, conveying, spreading, curing, finishing and protection equipment.

Placing of Concrete

Concrete shall be placed in the forms as close as possible to its final position in a single operation to the full thickness of slabs and beams and shall be placed in horizontal layers, not exceeding 2.5 m height in a single pour in walls, columns and similar members.

The Bidder shall organize the pouring of concrete in such a manner that once concreting of a section has started the operation shall be continuous and each operation shall be completed prior to a stoppage.

The maximum allowable temperature differential between any two points in the same element is 15□C. Additional temperature control measures during construction (such as the use of insulated formwork) will be required. Bidder to prepare a process control chart and method statement verifying measures to achieve these requirements.

Temperature monitoring of concrete work is required where:

a) the minimum dimension of any casting is 0.8 metres or more, or
b) where otherwise instructed by the Engineer.

Where specified on the drawings, construction, expansion or contraction joints shall be provided and the concrete shall be poured continuously between two adjacent joints. No other joints than shown on the drawings shall be permitted. Stoppage (cold) joints formed between two concreting operations separated by more than 6 hours time shall be subject to the same treatment as the construction joints.

Concrete shall not be dropped into place from a height exceeding 1.5 metres. Trunking

and chutes to Engineer's approval shall be used for any concrete to be deposited from a height exceeding 1.5 m.

Concrete which has partially hardened shall not be exposed to injurious vibration or shock, except for controlled re-vibration where specified. When concreting of a certain large structural element is specified strictly as to be poured continuously, then the concreting operations shall be organized for day and night working, in long shifts, as necessary.

Compaction and Mechanical Vibration of Concrete

As concrete is being placed it shall be compacted by mechanical vibrators complying with IS:2505, IS:2506, IS:2514 & IS:4656, to obtain a dense material free from honeycombing, free from water and air holes.

The Bidder shall ensure that the vibrators are used in such a manner that the reinforcement is not displaced, the formwork not damaged and no segregation caused, but complete compaction of the concrete is achieved.

Finish of Concrete

The concrete face shall have the finishes indicated on the drawings or in the specification. The finished surface of the concrete shall be sound, solid and free from honeycombing, protuberances, air holes or exposed aggregate. No plastering, cement wash, mortar or paint shall be applied to cover defective concrete surfaces.

7.8 CONSTRUCTION, EXPANSION AND CONTRACTION JOINTS

Construction Joints

The number of construction joints should be kept as low as possible consistent with reasonable precautions against shrinkage. Concreting should be carried out continuously up to construction joints.

Where it is necessary to introduce construction joints, careful consideration should be given to their exact location, which should be indicated on the drawings. Alternatively, the location of joints should be subject to the approval of the Engineer before any work commences. Construction joints should be at right angles to the general direction of the member.

The maximum horizontal length of wall to be poured in one operation in any one direction is 7.5 metres. A period of 7 days to be allowed between adjacent pours

except where water stops are provided when this can be reduced with Engineer's approval. Alternatively, a gap of 600 mm wide shall be left between adjacent pours and filled after 7 days from the date of formation subject to Engineer's approval.

Immediately prior to recommencement of concreting on a joint, the surface of the concrete against which new concrete will be cast should be free from laitance and should be roughened to the extent that the largest aggregate is exposed but not disturbed. Care should be taken that the joint surface is clean immediately before the fresh concrete is placed against it.

Particular care should be taken in the placing of the new concrete close to the joint. This concrete should be particularly well compacted and a vibrator should be used.

Where the Engineer considers that special preparation is necessary, i.e. for an in-situ structural connection, preparation should be carried out preferably when the concrete has set but not hardened, by spraying with a fine spray of water or brushing with a stiff brush, which is sufficient to remove the outer mortar skin and expose the larger aggregate. Where this treatment is impracticable, sand blasting or a needle gun should be used to remove the surface skin and Latinance.

A record shall be kept on site of the time and date of placing the concrete in each section of the work. This is to be done by maintaining pour cards also.

Expansion and Contraction Joints

The expansion joints, contraction joints and other permanent structure joints shall be provided in positions as per IS:456, IS:3370 or standard practice.

Joints shall be straight and vertical, except where other specified, and concrete surfaces on both sides of the joint shall be flush. Where necessary, waterstops of a type approved by the Engineer shall be embedded in the concrete. The waterstop should be made of high quality material which must obtain its resilience through the service live of the structure for the double function of movement and sealing. The surface of water stops should be carefully rounded to ensure tightness of the joint even under heavy water pressure. To ensure a good tightness with or without movement of the joints the waterstop should be provided with anchor parts. The cross-section of the waterstops should be determined in accordance with the presumed maximum water pressure and joint movements.

All joints between structural steel and concrete parts shall be sealed by a suitable

permanent flexible compound.

Concreting at Night

When approval is given to carry out concreting operations (under control of the Engineer) at night or in places where daylight is not possible, the contractor has to provide adequate lighting at all points of mixing, transportation and placing of concrete.

Concreting in High Ambient Temperature

This is to be performed in accordance with IS: 7861 (Part 1).

The temperature of the mixed concrete at the time of placement shall not exceed 40^0C generally for vibratory foundations, where it shall be limited to 250 C. The Bidder shall take special measures in the mixing, placing and curing of concrete. These measures shall include the shading of aggregates, spraying of aggregates with water, cooling of the mix constituents (introduction of ice to the mixing water) and reduction of transportation time. During placing, suitable measures shall be provided to prevent premature setting of concrete placed in contact with hot surfaces. All concreting areas, formwork and reinforcement shall be shielded from the direct rays of the sun and sprayed with water when necessary.

Protective Measures for Concrete

In general, the cover of rebars shall be as per IS:456 taking into account the site conditions.

Immediately after the compaction of the concrete the Bidder shall ensure adequate protection from the weather. Excessive drying can lead to crack formation as a result of plastic contraction. The concrete surface shall be covered with a layer of sacking, canvas, straw mats or similar absorbent material, special protection sprays kept constant moist for at least 7 days.

Curing compounds or other methods of preventing evaporation may be used if approved by the Engineer. Where formwork cannot be removed within 24 hours after placing the concrete, the formwork shall be kept shaded from the direct rays of the sun and shall be sprayed with water.

Where large sections of concrete are poured, special precautions to the approval of the Engineer shall be taken to reduce and dissipate the heat generated by the setting and hardening of the concrete (e.g. built-in cooling water pipe system).

The minimum amount of reinforcement in slabs shall be present to prevent shrinking cracks as per IS 456.

Concreting under-water

Underwater concreting shall be done as per IS:456.

Underwater concrete is to be placed continuously without interruption. For water depths upto 1 m, the concrete may be placed without tremie. In the case of water depths exceeding 1 m, the concrete is to be placed in such a way that it does not fall freely through the water. The tremies must at all times dip sufficiently far into the freshly placed concrete to ensure that the concrete emerging from the tremie does not come in contact with the water.

All work connected with the placing of concrete underwater shall be designed, directed and inspected with due regard to local circumstances and purposes. Work shall not proceed until all phases and methods to be used in the placing operations have been approved by the Engineer.

7.9 CONCRETE WITH SPECIAL PROPERTIES

General Requirements

The pre-condition for obtaining concrete with special properties is that it should be made with the appropriate composition, that it is placed in such a way that segregation does not occur and further that it is fully compacted and given appropriate curing is done.

Concrete with High Wearing Resistance

Concrete which is exposed to severe mechanical action, e.g., due to intensive traffic, sliding of bulk materials, frequent impact blows or movements of heavy objects, or due to fast-flowing water carrying solids, or other causes, should possess high wearing resistance and correspond to at least grade M30.

The aggregate upto 4 mm size should consist predominantly of quartz or materials of at least equal hardness; the coarser particles should consist of stone or artificial materials possessing high abrasion resistance. The particles of all types of aggregate should have a moderately rough surface and be of compact shape. The combined aggregate should be as coarsely graded as possible.

Furthermore, the concrete should be as stiff as possible, in order that there will be no

concentration of cement slurry or water in the top layer. The concrete should be kept moist for at least 7 days after placing.

7.10 FLOOR FINISHES

Floor finish to be provided as specified in finish schedule.

Base slab surfaces shall be ground or filled until each surface is within the specified tolerances. Low areas shall be filled. High spots shall be ground slightly lower than required and then filled and smoothed to the proper elevation and surface.

Surfaces that receive a mortar set quarry tile, ceramic tile, or terrazzo finish shall be given a smooth, tight, and uniform float finish.

7.11 FORMWORK

Design and Construction

For stability and type of formwork and support framing used, IS: 14687 is to be compiled with.

The formwork and the supporting structure are to be so dimensioned as to be able to withstand all vertical and horizontal forces safely.

The Bidder shall submit in sufficient time in advance for the approval of the Engineer the calculations, designs and details of the methods adopted and materials proposed for the formwork.

Particular attention must be paid to the formwork supports and braces for all important structures

Materials for Formwork

Forms shall be constructed from steel or from sound timber well-seasoned and free from shakes. Plywood lining for forms shall be of timber which is resin-bonded and water repellent.

Formwork surfaces in contact with concrete shall be free from adhering grout, projecting nails, splits or other defects.

Joints shall be sufficiently tight to prevent the leakage of cement grout. Connections shall be constructed to permit easy removal of the shuttering and shall be either nailed, screwed, bolted, or otherwise secured so as to be strong enough to retain the correct shape during consolidation of the concrete. Where a slope exceeds 1 V : 2 ½ H formwork shall be provided for the top of the concrete faces and anchored to prevent

flotation.

The details of fair faced concrete facades have to be to the satisfaction of the Engineer. The concrete surface for facades has to be absolutely stainless and all efforts have to be taken to achieve this.

Grading of Formwork and of Finished Concrete Surfaces

Quality of formwork, materials to be used and treatments of surface are graded according to the finish of the concrete surface as given in IS:14687.

The type and treatment of the formwork lining (plywood, metal, plastics, etc) should be appropriate to the grade of concrete finish required.

Preparation and Inspection of Formwork

Before concrete is placed, all formwork shall be inspected to see if it is built according to the approved plans and to see if it has been cleaned and is free from sawdust, shavings, dust, mud, earth or other contamination and properly oiled. Contact surfaces of panels shall be treated with a suitable release agent (e.g. non-staining mineral oil) where applicable. Surfaces which are not oiled shall be wetted thoroughly to prevent warping.

Erection and Placing of Formwork

All formwork shall be erected and placed in accordance with the construction drawings approved by the Engineer. Shuttering shall be true to line and braced and strutted to prevent deformation under weight and pressure of the wet concrete, live-loads, wind and other forces. The deflections shall not exceed 3mm.

The formwork for beams and slabs shall be erected so that the form on the sides of the beams and of the soffits of slabs can be removed without disturbing the beam soffit.

If the formwork for columns is erected to the full height of the columns, one side shall be provided with openings for concreting in order to guarantee a proper compaction of the poured concrete.

Formwork for walls and elsewhere shall be arranged for a maximum concreting height of 2.5 m in a single pour. Where necessary panel openings are to be provided in the forms for cleaning, inspection, access of vibrators, etc.

Before placing of concrete, bolts, ties and fixings shall be positioned and all devices used for forming openings, holes, pockets, chases, recesses, etc shall be fixed to the

formwork carefully.

Panels shall be put together to ensure a perfect fit at the joint and fixed in both directions.

Internal spacers and ties, if any, shall be so arranged that after removing of the forms no holes shall extend through the concrete, in the case of watertight concrete or to be closed by plastic plugs and epoxy mortar in all other cases.

All formwork will be inspected and approved by the Engineer before concrete placing commences but this shall not relieve the Bidder of any of his responsibilities under the contract.

Striking of Formwork

Formwork shall not be removed until the concrete has sufficient strength to carry its own weight plus any constructional or designed loads likely to be applied with a normal factor of safety. It shall be removed in such a manner that no shock or injury shall result to the concrete.

Before removal of the formwork, the concrete shall be examined and removal shall proceed only on the instructions and under the supervision of a competent person.

The striking period for cast in-situ concrete shall be as per IS 456.

Columns, piers and walls are to be struck before the beams and slabs supported by them. Scaffolds, formwork supports and self-supporting floor formwork are to be carefully lowered by releasing the devices.

Extreme care shall be taken to avoid chipping of corners during removal of formwork.

To keep deflections through creep and shrinkage to a small amount, auxiliary supports should be left in place or immediately repositioned after striking.

Re-use of Forms

Before re-use, all forms shall thoroughly scraped, cleaned, joints and planes examined and when necessary repaired and inside surface treated as specified here in before. Formwork shall not be used /re-used if declared unfit or unserviceable by the Engineer in Charge.

7.12 REINFORCING STEEL

General

Reinforcing steel of grade Fe-500 used in reinforced concrete shall comply with the

following standards:-

a) Deformed bars conforming to IS: 1786.

b) Mild steel conforming to IS: 432.

c) Mesh reinforcement conforming to IS: 1566.

Binding Wire

a) Plastic coated binding wires to be used for epoxy coated rebars.

b) Binding wire for general use shall be 1.6 mm dia galvanized annealed wire.

Reinforcement Supports

Reinforcement supports shall include all spacers, chairs, ties, slab bolster, clips, chair bars, and other devices for properly assembling, placing, spacing; supporting, and fastening the reinforcement.

Spacers shall be cast from concrete of the same quality as that in which they will be ded.

Concrete block spacers shall be cast in metal moulds with an approved means of separating blocks and of ensuring that the blocks are of the proper size.

Coated binding wire shall be incorporated into the blocks to enable them to be securely attached to vertical or horizontal bars and the Bidder shall demonstrate both that the blocks are of the requisite strength and that the means of attachment to the reinforcement are adequate.

Epoxy Coating of Reinforcement

Wherever epoxy coated reinforcement is used, reinforcing bars, fabric and special steel connections shall be protected against corrosion by means of an epoxy coating as per IS:13620.

At the same time, the Bidder shall furnish written certification from the coating applicator that the coated reinforcement bars were cleaned, coated and tested in accordance with the requirements of this specification.

Coating materials shall be heat-cured epoxy resin powders applied by electrostatic spray process. The thickness of the coating shall be 250 □m.

Reinforcement bars which are to be coated shall be clean and free from rust, scale, oil, grease and similar contaminants. The surface shall be abrasive blasted to Swedish Standard SA3. As soon as possible after cleaning and before any visible oxidation to

the surface occurs, the steel shall be coated with a fusion-bonded powder epoxy coating applied by electrostatic process.

Bar-Bending Schedules

The Bidder shall prepare bar bending schedules based on the detailed reinforcement drawings. Approval of these schedules in no way absolves the Bidder from full responsibility for their completeness and correctness in every way nor shall any claim for extra cost or time be allowed on the grounds of such errors or discrepancies which may arise between drawings and schedules.

7.13 WATERSTOPS

Waterstops shall be PVC or equivalent and shall be eye-letted with a minimum 150/230 mm width. Type and manufacturer shall be submitted for Engineer's approval.

All intersection pieces shall be prefabricated by the manufacturer and only welding of butt-joints in running lengths will be allowed to be carried out on the site.

The site welding of butt-joints shall be executed by using the manufacturer's purpose-made electrically heated jig and work shall be done by a competent and trained personnel only. The manufacturer's instructions shall be carefully observed.

The wings of the waterstops shall be formed with corrugations or bulbs to achieve a good bond. Moreover, the waterstops shall conform to the following requirements:-

a) The tensile strength not less than 10 N/mm2 when tested.

b) The ultimate elongation shall not be less than 22% when tested.

c) The tear resistance shall not be less than 2 N/mm2 when tested.

d) The material shall not crack when tested.

e) Under accelerated elongation, the tensile strength shall not be less than 8 N/mm2 and the ultimate elongation shall not be less than 200%.

The waterstops of thickness 9mm/10mm shall be installed so that they are securely held in position during the placing of concrete which shall be fully and properly compacted around the waterstops to prevent voids or porous areas. Adequate clearance between the reinforcement and all the waterstops shall be kept to permit proper compaction of concrete.

No holes or nailing shall be made through any waterstop for fixing purposes. Jointing by lapping two pieces of waterstops shall not be permitted.

The free edges of waterstops shall at all times be protected from direct sunlight.

7.14 CONCRETE STAIRS

R.C.C Staircase shall be provided for structures and facilities, as mentioned in detailed building description.

Minimum width of stair	1200 mm (General).
Tread	250 mm (Min)
Riser	180 mm (Max)

All stairs normally shall have not more than 15 risers in one flight. Aluminium angle nosing with minimum 50 x 25 x 3 angle shall be provided for edge protection of RCC stairs.

7.15 CURING

Concrete shall be protected from loss of moisture for not less than 7 days after the concrete is placed.

Trowelled surfaces, except those that receive a separate finish or coating, shall be cured with a membrane curing compound. Float finished surfaces, except those that receive a separate finish, may be cured with either a membrane curing compound or with water. Only water curing shall be used if the surface receives a separate finish.

Water Curing

Water saturation of concrete surfaces shall begin as quickly as possible after initial set of the concrete. Water curing shall begin within 12 hours in dry weather and within 24 hours in damp weather.

After the rubbing has been completed, rubbed surfaces shall be covered with burlap and kept saturated for the remainder of the curing period.

Membrane Curing

Membrane curing compound shall be applied within 30 minutes after final finishing of the surface or as soon as possible after finishing without causing damage to the surface.

7.16 FLOOR SEALER

All concrete floors shall be given two coats of clear floor sealer in addition to that applied as membrane curing compound. The first coat shall be applied at the end of

the curing period before any traffic is permitted on the floor. The second coat shall be applied after the floor has been cleaned in preparation for the final inspection. Floor sealer shall be applied in strict accordance with the manufacturer's recommendations.

7.17 REPAIRING OF DAMAGED OR DEFECTIVE CONCRETE

Concrete which has completed its final setting shall be inspected by the Engineer and any cracks, honeycomb areas, segregations, etc. shall be marked. No repairs shall be carried out until direction by the Engineer.

Defective concrete shall be replaced within 48 hours after the forms have been removed.

Concrete repair work shall not interfere with the curing of surrounding concrete. Mortar and concrete used in repair work shall be adequately cured and shall be finished to match adjacent surfaces.

Waterproofing of foundations For external surface of foundation minimum two coats of bitumen grade 85/25 as per IS: 702, mixed with 1% of antistripping compound meeting the requirement of IS: 6241, shall be applied. The total application of bitumen shall not be less than 1.7 kg/cm2.

Bidder shall submit a comprehensive scheme for water proofing treatment based on above or any other alternative scheme, internationally accepted for consultant’s/Owner’s approval prior to commencement of work.

7.18 DAMP PROOFING

Damp-proof course 40 mm thick, consisting of cement concrete 1:2:4, with admixture of approved water-proofing compound shall be laid at plinth level for walls of all buildings for protection of super-structure against moisture and dampness.

7.19 STANDARD GROUTING

Ordinary grout shall be provided for miscellaneous structure base plates viz. operating platforms (not supporting equipment), pipe supports upto 2.5 m height (above concrete top), cross-over, staircases and ladders.

The proportions of grout shall be such as to produce a flowable mixture consistent with minimum water content and shrinkage. Based on requirement for obtaining non-shrink grout, aluminium powder may be used as an admixture. The grout proportions shall be limited as follows:-

Use	Grout thickness	Mix proportions	W/C ratio
a) Fluid mix	Under 25 mm	One part Portland cement to one part of sand	0.44
b) General	25 mm and over but less than 50mm	One part Portland cement to 2 parts of sand	0.53

a) Sand shall be such as to produce a flowable grout without any tendency to segregate.

b) Sand for general grouting purposes, shall be graded within the following limits:-
- Passing IS 2.36 mm sieve : 95 to 100%
- Passing IS 1.18 mm sieve : 65 to 95%
- Passing IS 300 micron sieve : 10 to 30%
- Passing IS 150 micron sieve : 3 to 10%

c) Sand for fluid grouts, shall have the fine material passing the 300 and 150 micron sieves at the upper limits specified above.

d) Surfaces to be grouted shall be thoroughly roughened and cleaned of all foreign matter and laitance.

e) Anchor bolts, anchor bolt holes and the bottom of equipment and column base plates shall be cleaned of all oil, grease, dirt and loose material. The use of hot, strong caustic solution for this purpose will be permitted.

f) Prior to grouting, the hardened concrete surfaces to be grouted shall be saturated with water.

g) Water in anchor bolt holes shall be removed before grouting is started.

h) Forms around base plates shall be reasonably tight to prevent leakage of the grout. Adequate clearance shall be provided between forms and base plate to permit grout to be worked properly into place.

i) Grouting, once started, shall be done quickly and continuously to prevent segregation, bleeding and breakdown of initial set. Grout shall be worked from one side of one end to the other to prevent entrapment of air. To distribute the grout and to ensure more complete contact between base plate and foundation and to help release entrapped air link chains can be used to work the grout into place.

j) Grouting through holes in base plates shall be by pressure grouting.

7.20 NON-SHRINKING GROUT FOR COLUMN BASES AND EQUIPMENT FOUNDATIONS

a) Non-shrink flowable grout shall be used for under pinning work below base plate of columns. Non-shrink cum plasticizer admixture approved by Consultant/OWNER shall be added in the grout. For grouting of base of machine foundation high strength flowable ready mixed non-shrink grout shall be used.

b) The compressive strength of the grout shall exceed M35. As a rule of thumb, the crushing strength of grout shall be generally one grade higher than the base concrete. All grouting shall be carried out using a pre-packaged, non-shrink cementitious grout manufactured under ISO 9002: 1994 Quality Assurance Scheme.

c) Forms and shims used to obtain adequate clearance shall not be removed and the anchor bolts shall not be tightened for at least three days after placing the grout. After the removal of forms and shims, area occupied by shims shall be filled and the area between the base and edge of the foundation shall be finished smooth to allow drainage away from the base. Attachment of interconnecting piping of machinery and complete load transfer of machinery shall not be done before the bolts are tightened. During this period, grouting work shall be properly cured using rags/gunny bags.

d) Nominal thickness of grouting shall be at least 50 mm for building columns and pedestals of major equipment. For secondary posts, stair and ladder base, etc. grouting shall not be less than 25 mm thick.

e) In view of extremely small proportion (about 0.01% by weight of cement) of the aluminium powder required, it is necessary to take all precautions to ensure thorough mixing. It is advisable to mix the blend of aluminium powder thoroughly with sand and cement before water is added because aluminium powder has a tendency to float on water.

f) Proprietary material of approved manufacture used as an admixture to obtain non-shrinking grout shall be mixed in the proportion of 1:1:1 (1 cement : 1 admixture : 1 sand), or as per manufacturer's instructions.

g) Pre-mixed non-shrinking grout shall be used all as per manufacturer's catalogue and without any additional materials/admixtures such as cement, sand and aggregates etc.

7.21 RCC PAVING

RCC paving of minimum 150 mm thick with M30 grade concrete, over an underbed as specified herein shall be provided for areas mentioned below. RCC paving shall be designed as rigid reinforced concrete pavement for the crane/ vehicular/ equipment movement loads which the paving has to bear. The underbed for paving shall consist of preparation and consolidation of sub-grade to the required level, laying of stone soling of 200mm compacted thick for normal duty paving and 400mm compacted thick for heavy duty paving with 63 mm and down aggregate with interstices filled with selected murrum followed by 75 mm thick 1:4:8 PCC (1 part cement, 4 parts sand and 8 parts stone aggregate) with 40 mm nominal size aggregate.

8.0 EMBEDDED PARTS

8.1 INTENT

This Sub-Section of specification deals with the supply, fabrication (where called for) and/or erection of embedded steel parts and PVC pipes including laying of anchor fasteners wherever mentioned in civil drawings.

8.2 GENERAL REQUIREMENTS

a) Embedded steel parts shall be either furnished by the Purchaser for transportation & erection by the Contractor or supplied, fabricated and erected by the Contractor as stipulated. If supplied by the Purchaser, these parts shall be furnished anywhere within the project area and the Contractor shall transport and install the same in the work site.

b) Embedded steel parts supplied by Purchaser and erected by the Contractor shall include items such as, but not limited to, anchor bolts, pipe sleeves, equipment mounting-plates, steel pieces properly welded with necessary lugs, as shown on the drawings, auxiliary framing for equipment supports, dowel bars for concrete work, etc.

c) Embedded steel parts supplied, fabricated/erected by the Contractor shall include items such as, but not limited to plate inserts, edge protection angles, rolled sections with or without properly welded lugs, bolts, nuts etc.

d) Cold formed steel bars shall not be used for lugs.

8.3 MATERIALS

The materials shall be in accordance with the relevant clauses of Technical Specification for 'Properties, Storage and Handling of Common Building Materials (Section 2), which shall be deemed to form a part of this specification.

Mild steel pipes shall conform to IS: 1161. Unless otherwise specified, medium class pipes shall be provided.

PVC pipes shall conform to IS: 4985. Minimum pressure rating shall be 2Kgf/ cm2

Rolled steel sections and plates etc. shall conform to IS: 2062.

8.4 CODES AND STANDARDS

Codes and Standard mentioned at various places under this Sub-Section.

8.5 TECHNICAL REQUIREMENTS - INSTALLATION

a) The Contractor shall fabricate, transport to site and erect accurately in position all embedded steel parts either by welding, bolting or any other means as approved by the Engineer / Purchaser. Exposed surfaces of embedded parts other than holding down bolts, unless otherwise stated, are to be painted with two coats of approved anticorrosive paint (as per IS: 2074) and/or bituminous paint as directed. The threads of holding down bolts shall be greased and protected with waterproof tape.

b) During erection, the Contractor shall provide necessary strong temporary bracing and supports to ensure proper installation of the embedded parts which shall be erected at the true location as shown on the drawings and these shall be in plumb and level (unless otherwise shown on drawings). The Contractor shall furnish the Engineer / Purchaser with fabrication and assembly drawings prepared for embedded steel parts showing the erection procedure, for major items, wherever necessary.

c) Fabrication & erection shall be carried out as per IS: 800. Welding rods & site/ field welding shall conform to IS: 816 and IS: 9595. IS: 7634 (part-III) shall be followed for PVC pipe works.

ANCHOR FASTENERS

1) Expansion fasteners shall be used for fixing of steel members, embedment, equipment mounting frames and similar other parts subsequent to concrete work. Fasteners shall be of appropriate type, size and capacity as per manufacturer's specification, and shall be installed by drilling holes of appropriate size in the concrete.

2) The anchor fasteners shall be of two types viz. Medium duty for carrying tensile load (uplift) up to 1.0 MT per fastener and heavy duty for carrying tensile load of more than 1.0 MT and up to 5.0 MT per fastener.

3) The safe tensile load carrying capacity of the anchors shall be arrived by providing the minimum factor of safety of 2.5 on the characteristic load of the anchor. Minimum size of anchors shall be M8.

4) All anchors shall be from established and approved manufacturers.

5) Anchors shall be fixed in position as recommended by the manufacturer and as approved by the Engineer / Purchaser.

6) Anchor fasteners can be of mechanical bonding such as keying, friction, combined friction – Keying or chemical bonding.

7) Capacity of the anchors shall be established after considering the effect of concrete grade, embedded depth, concrete thickness, anchor spacing and edge distance from the concrete edge.

8) The selection for the particular type of bonding for the anchors shall be made after considering the concrete grade, available embedment depth, load to be transferred, space available for installing anchors.

9) Bonding of anchors can be either mechanical and / or chemical

   - The mechanical bonding anchors are torque controlled anchors made from carbon steel of grade 8.8 as per IS: 1367 Part III. Anchors in bolt as well as nuts version are acceptable. The bolt version anchors consists of bolt, washer, sleeves, plastic section, expansion sleeves and a cone. Nuts version anchors consist of nuts, threaded rod, washer, sleeve, plastic section, expansion sleeve and a cone. All steel components of anchors shall be electro galvanized to minimum 5 micron coating thickness. The plastic section shall be of Polyacetal Derlin 100 or equivalent.

   - Chemical bonding anchors shall consist of foil capsule and threaded rod. The foil capsule shall contain the resin and hardener. The threaded rod shall have chiseled tip. The anchors shall be tested for its behaviour under fire as per heating curve ISO: 834 for up to 120 minutes and furnish the test result. Anchors of size M* to M24 shall conform to grade 5.8 and M27 to M39 anchors shall conform to 8.8 grade. The grades are as per IS: 1367 Part – III. All steel components of the anchors shall be electro galvanized to minimum 5 micron coating thickness.

10) These anchors shall comprise of studs, nuts, washers and expansion sleeves. The one end of the stud shall have thread and the other end shall have cold formed conical head. All steel components of the anchors shall be electro galvanized to minimum 5 micron coating thickness. The expansion sleeve shall preferably be of stainless steel of SS316. The anchors shall conform to minimum grade of 5.8 as per IS: 1367.

8.6 SAMPLING, TESTING AND QUALITY ASSURANCE

Frequency of sampling, testing and acceptance criteria shall be as per Section 5, 6 and 7 of "Scope of Civil Works" document.

8.7 RATES AND MEASUREMENTS

RATES

a) The quoted rate shall include cutting, welding, fabrication, erection, embedding, painting, protective tape and transportation to site.

b) Quoted rate shall also include the cost of materials, not issued by the Purchaser as per relevant schedule of Item.

MEASUREMENTS

c) The measurement of this item shall be based on the calculated weight of steel installed in tonne corrected to second place of decimal. For mild steel and PVC pipes, measurements shall be in quintals. The lugs shall be measured in Kg.

d) Embedment of steel sections, M.S. pipes and PVC pipe work, shall be measured separately.

8.8 FOUNDATION BOLT ASSEMBLY

8.8.1 INTENT

This Sub-Section of the specification deals with the requirements of supply, fabrication and erection of foundation bolt assembly etc.

8.8.2 GENERAL REQUIREMENTS

Supply, fabrication, erection and installation of Foundation bolt assembly shall comprise of foundation bolts, stiffener plates, washers, nuts, lock nuts, pipe sleeves, etc.

8.8.3 MATERIALS

a) Foundation bolts shall generally conform to IS: 5624. Mild steel bars used for the fabrication of bolt assembly shall conform to grade- 1of IS: 432, IS: 226, IS: 2062 or any other material including high carbon/high tensile steel as specified.

b) Hexagonal nuts and lock nuts shall conform to IS: 1363 & IS: 1364 up to M36 dia and IS: 3138 for M42 to M150 dia.

c) Flat plain washers shall be of mild steel and punched/machined type conforming to IS: 5369.

d) Steel pipe sleeves shall conform to Medium class of IS: 1161.

8.8.4 CODES AND STANDARDS

Codes and Standard mentioned at various places under this Sub-Section.

8.8.5 TECHNICAL REQUIREMENTS - INSTALLATION

a) The fabrication and erection of bolt assemblies shall include threading, cutting. grinding, drilling, welding, etc. complete. All bolts, bolt assemblies, etc. shall be fabricated by the Contractor to the correct dimensions and shapes as shown on drawings, supplied by the Engineer / Purchaser. The bolts shall have coarse pitch screw thread in the diameter range 8 to 64 mm and 6 mm pitch screw for diameter > 64 mm as per IS: 4218.

b) For fabrication of any particular size of bolt indicated on the drawing, the diameters of the threaded portion of the bolt shall be considered as the diameter of the bolt.

c) Fabrication & erection shall be carried out as per IS: 800. Welding shall conform: to IS: 816 and IS: 9595.

d) Every bolt shall be provided with a steel washer, under the nut. The washer shall be flat and min outside inscribed circle has a diameter 2.50 times that of the bolt and of suitable thickness. All nuts shall be of steel with well-formed hexagonal heads, unless specified otherwise, forged from solid metal and shall be dipped in hot boiled linseed oil as soon as these are made. The nuts shall fit well on the bolts. Tapered washer and lock nut shall be provided if shown in drawing and directed by the Engineer / Purchaser.

e) During erection, the Contractor shall provide necessary template, temporary bracing, supports etc. to ensure proper positioning of the assemblies and holding them firmly until they are cast/grouted and the pour has set. All materials shall be erected in plumb and in level (unless otherwise specified) and at true locations as shown on the drawings. Threads shall be protected by using PVC tape.

f) Minimum distance from the center line of foundation / anchor bolt to edge of pedestal shall be the maximum of the following:

- Clear distance from the edge of base plate / base frames to the outer edge of the pedestal shall be minimum 50 mm.
- Clear distance from the face of pocket to the outer edge of pedestal shall be 75 mm.
- Clear distance from the edge of sleeve or anchor plate to the outer edge of pedestal shall be 75 mm.

g) All foundation bolts shall be provided with double nuts.

8.8.6 SAMPLING, TESTING AND QUALITY ASSURANCE

Frequency of sampling, testing and acceptance criteria shall be as per Section 5, 6 and 7 of “Scope of Civil Works” document.

8.8.7 RATES AND MEASUREMENTS

RATES

a) The quoted rate shall include complete bolt assembly with nut, locknut, washer, pipe sleeve, protective tape, etc. This shall also include the cost of materials not issued by the Purchaser but required to complete the work as directed by the Engineer / Purchaser.

b) Any Template, Jigs & fixtures required for positioning of Anchor bolts shall not be paid separately.

MEASUREMENTS

a) The measurement of this item including that of standard nuts, locknuts and washers shall be based on the calculated weight of steel installed in tonne corrected to second place of decimal.

b) In case, bolt assembly is supplied by the Engineer / Purchaser, it shall be measured and paid separately under the item of transportation, erection and installation of embedded steel parts.

c) If desired, the Engineer / Purchaser shall direct the Contractor to cross check jointly the calculated weight with actual measured weight. Engineer / Purchaser deserves the full right to accept / reject unspecified work based on above observation or certify measurement of calculated measured weight, whichever is less.

9.0 PLANT ROADS, SEWERAGE AND DRAINAGES

9.1 GENERAL

This specification covers all work required for the construction of road including box-cutting, edging, sub-base, water bound macadam, bituminous macadam, wearing course etc. and shall include all incidental items of work not shown or specified but necessary for the completion of the work.

This specification also includes all work required for drainage including road side drain, RCC culverts, pipe-culverts, drainage pipes, manholes etc. and all other incidental items.

9.2 PLANT ROADS

a) A detailed CBR test shall be carried out as per the procedure outlined in IS: 2720 (Part XVI) for design of roads. Compacted murrum shoulders of minimum 150-mm thickness shall be provided on either side of the roads.

b) All major roads providing access to buildings / structures / systems requiring maintenance by vehicles shall be 6 m wide. 1500 mm wide road shoulder shall be provided on either side of all two lane roads with appropriate topping.

c) Bituminous topping of all plant roads shall be taken up after construction of the plant is completed. On either side of the roads open drains shall be provided. Minimum clear width of the drain shall be 450mm. Drainage lines and other underground services shall be located at least 1 m clear from the edge of the road.

d) Minimum requirement for main roads is indicated on General Layout Plan (GLP). However, other additional roads which are not specifically shown on GLP but required from functional considerations shall also be provided by the Bidder.

e) Finished top (crest) of roads shall be 150 mm above the surrounding grade level.

f) Road construction including bitumen macadam, water bound macadam base and sub-base shall be as per IRC standards. Minimum total thickness of black topping (premix carpeting) shall be 50 mm in 2 layers of 25 mm each followed by seal coat (Type B). First layer shall be provided during construction and second layer after the commissioning of the plant. Seal coat shall be provided over the second layer. For premix carpet, recommendation of IRC-14 shall generally be followed. Spreading of black topping work shall be carried out using paver.

g) Gypsum disposal slurry pipes, if required by design, could be be supported on ground on RCC pedestals. The bottom of slurry pipes shall be minimum 300 mm above finished grade level.

h) For RCC culverts at road crossing of pipelines supported on ground, the pipe top level generally shall not be more than 100mm above the top of the road. Suitable hump with slope not steeper than 1:30 shall be provided for the roads. Necessary modification shall be done by the Bidder for the roadside drains.

9.3 PLANT STORM WATER DRAINAGE

9.3.1 Plant Area Drainage

a) The plant area drainage system shall be designed so as to discharge by gravity flow, for this a network of open rectangular or pipe drains shall be constructed for efficient discharge of storm water. The thickness of sides and bottom of rectangular drain shall be as per design considerations and shall be of minimum M30 grade concrete. RCC or pipe culverts shall be provided for road and rail crossings. Drains shall be provided on both sides of the road.

b) For pipe drains, concrete pipes of class NP2 (Minimum) shall be used. However, for road and rail crossings concrete pipes of class NP3 (as per IS 458) and NP4 (as per IS 458) respectively shall be used. The pipes shall be laid as per IS: 783. In this case open catch water drain shall be provided on the other side of road and connected to pipe drain through RCC manholes.

c) All drainage culverts shall be RCC box culverts, wherever heavy crane movement is envisaged.

d) The run off collected by the above drains shall be suitably discharged in the natural drainage source at existing storm water drain or a suitable location as decided by consultant/Owner. The invert levels of the new plant drains shall be kept such that water can be discharged by gravity to the natural drainage source when the highest design water level occurs. Suitable modifications for connecting the new drains to the natural drainage source at the Junction points shall be carried out by the Bidder, after the scheme is approved by the Engineer.

e) Storm water from oily areas will be passed through oil water separator and diverted to the treated effluent pond and retained for reuse.

f) Open storm water drains shall be provided on both sides of the roads and shall be

designed to drain the road surface as well as all the free and covered areas, etc.

g) Plant oily / chemical effluent pipes/ drains will be different from Storm water system.

9.3.2 Plant Floor Drainage

a) Open RCC rectangular section shall be provided for all drains. RCC drains shall be covered with perforated pre-cast RCC slabs of minimum 50-mm thickness with provision of openable galvanized steel grating covers at about 4.0m intervals. Similarly all artillery drains and the drains along the periphery of building shall also have perforated pre-cast RCC covers of minimum 50 mm of M25 grade (minimum) thickness with provision of openable galvanized steel grating steel grating covers at about 4.0 m intervals. In areas where vehicular loads would be coming, pre-cast. RCC covers of suitable thickness without perforations and designed for the vehicular loading shall be provided. The thickness side walls and bottom slab of RCC drains shall be minimum 100 mm or as per design considerations whichever is higher. RCC box/pre-cast R.C.C pipe culverts shall be provided for road and rail crossing.

b) All drains inside the building shall have minimum 40 mm thick grating covers. In areas where heavy equipment loads would be coming, pre-cast RCC covers shall be provided in place of steel grating.

c) Invert of the drains shall be decided in such a way that the water can easily be discharged to the natural water bodies. Pumping of the drainage water (if required) shall be done. The invert of the in-plant and plant peripheral drains shall be kept such that water can be discharged by gravity to the main/ trunk drains under all conditions.

10.0 DRAWINGS

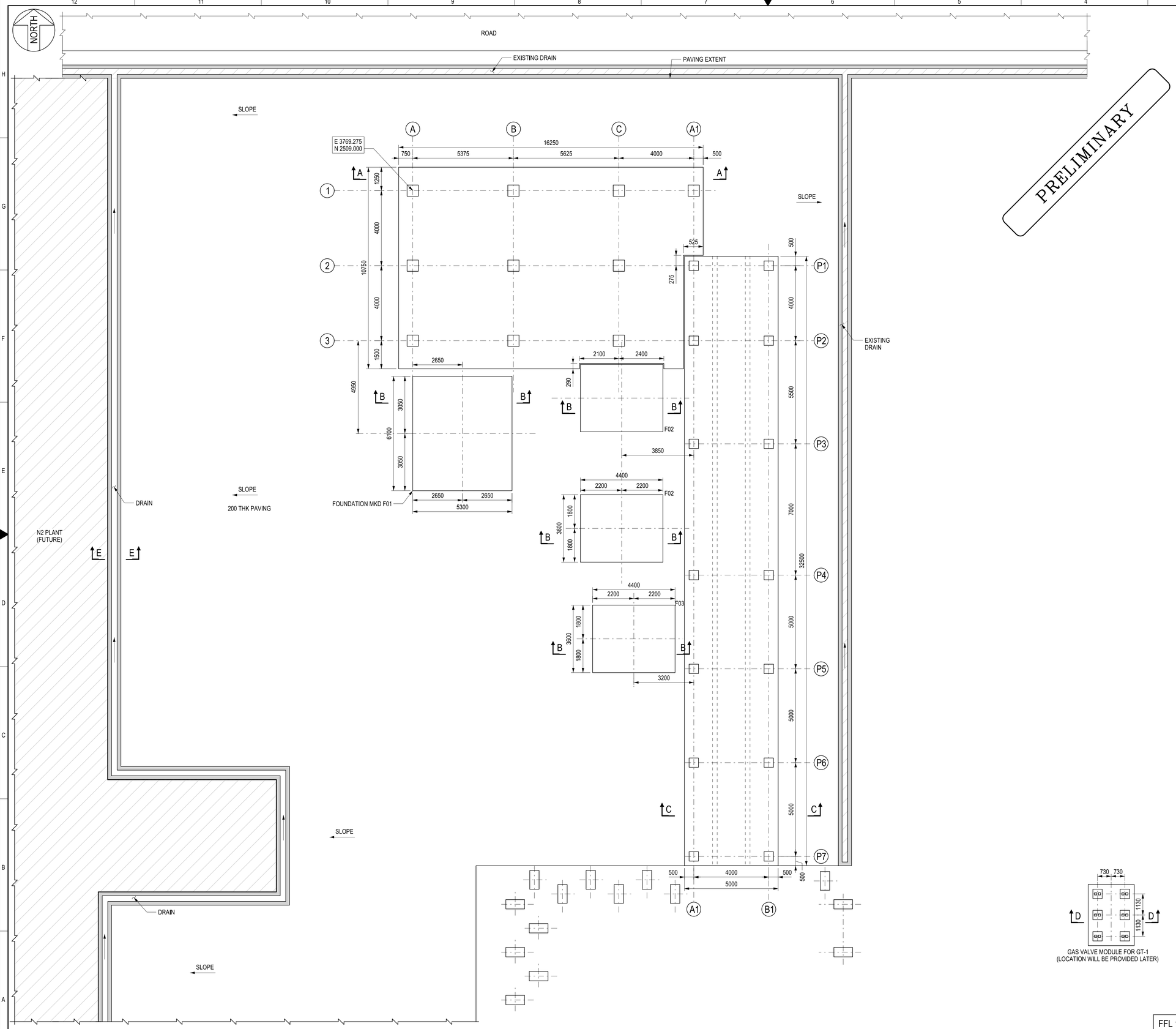

FOUNDATION LAYOUT

PRELIMINARY

NOTES:

01. ALL DIMENSIONS ARE IN MM, LEVELS AND CO-ORDINATES ARE IN METERS UNLESS NOTED OTHERWISE.
02. THIS DRAWING SHALL BE READ IN WITH CONTRACT TERMS, CONDITIONS AND SPECIFICATIONS AND SCHEDULE OF ITEMS.
03. **ALL DIMENSIONS AND ELEVATIONS SHOWN HERE ARE PRELIMINARY AND ARE SUBJECT TO CHANGE AFTER DETAILED DESIGN.**

HOLD LIST:

REFERENCE DRAWINGS:

DRAWING NO.	DRAWING TITLE

REV.	DATE	DESCRIPTION	PREP	MECH	ELEC	CIVIL	C&I	SES	APPD.

STAMP:

SPACE FOR STAMPING

PROJECT: NATURAL GAS FIRING PROVISION IN GTG 1 & GTG 2 OF MRPL CPP3 UNIT

OWNER: MANGALORE REFINERY & PETROCHEMICALS LTD.
(SUBSIDIARY OF ONGC LTD)
KUTHETHOOR P.O., Via KATIPALLA, MOODAPADAV MANGALORE - 575 030

PMC: L&T - SARGENT & LUNDY LIMITED

	DATE	NAME	SIGN
PREPARED BY	XX-XX-XX	XXX	
CHECKED BY	XX-XX-XX	XXX	
APPROVED BY	XX-XX-XX	XXX	

DWG TITLE: XXXXXXXXXXX XXXXXXXXXXX XXXXXXXXXXX

DEPARTMENT: XXXXXXXXXX

DWG. NO.: XXXXXXXXXXXXXXXXXXX

L&T-S&L JOB NO.: HO21005000

SCALE: X:XXX

SHEET: XX OF XX

REV. XX

A1 (841mm x 594mm)

THIS DRAWING AND DESIGN IS THE PROPERTY OF L&T - SARGENT & LUNDY LIMITED AND MUST NOT BE COPIED OR LENT WITHOUT THEIR PERMISSION IN WRITING.

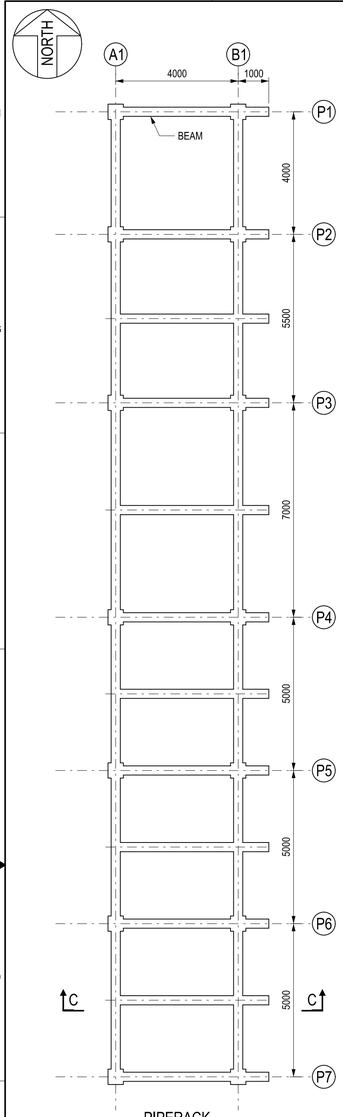

PIPERACK
PLAN AT T/CONC EL(+)105.000

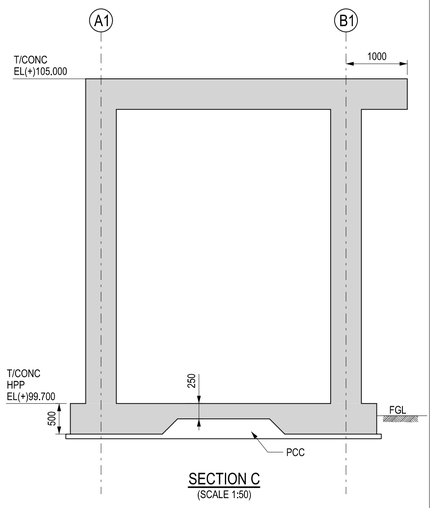

SECTION C
(SCALE 1:50)

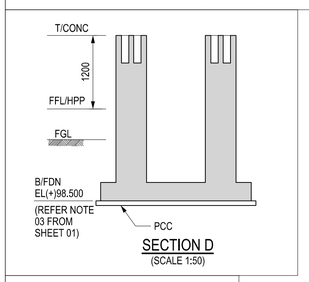

SECTION D
(SCALE 1:50)

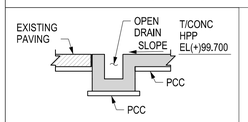

SECTION E
(SCALE 1:50)

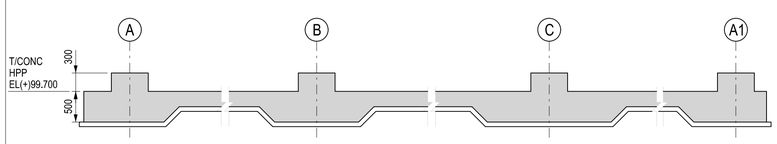

SECTION A
(SCALE 1:50)

SECTION B
(SCALE 1:50)

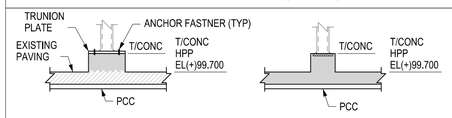

TYPICAL DETAIL FOR PIPE SUPPORT PEDESTAL
(SCALE 1:50)

PRELIMINARY

FFL 100.000	
HPP 99.700	
LPP 99.600	
FGL 99.500	

NOTES:

01. ALL DIMENSIONS ARE IN MM, LEVELS AND CO-ORDINATES ARE IN METERS UNLESS NOTED OTHERWISE.
02. THIS DRAWING SHALL BE READ IN WITH CONTRACT TERMS, CONDITIONS AND SPECIFICATIONS AND SCHEDULE OF ITEMS.
03. **ALL DIMENSIONS AND ELEVATIONS SHOWN HERE ARE PRELIMINARY AND ARE SUBJECT TO CHANGE AFTER DETAILED DESIGN.**

HOLD LIST:

REFERENCE DRAWINGS:

DRAWING NO.	DRAWING TITLE

REV.	DATE	DESCRIPTION	PREP	MECH	ELEC	CIVIL	C&I	SES	APPD.

STAMP:

SPACE FOR STAMPING

PROJECT: NATURAL GAS FIRING PROVISION IN GTG 1 & GTG 2 OF MRPL CPP3 UNIT

OWNER: MANGALORE REFINERY & PETROCHEMICALS LTD.
(SUBSIDIARY OF ONGC LTD)
KUTHETHOOR P.O., Via KATIPALLA, MOODAPADAY MANGALORE - 575 030

PMC: L&T-S&L L&T - SARGENT & LUNDY LIMITED

	DATE	NAME	SIGN
PREPARED BY	XX-XX-XX	XXX	
CHECKED BY	XX-XX-XX	XXX	
APPROVED BY	XX-XX-XX	XXX	

DWG TITLE: XXXXXXXXXXX XXXXXXXXXXX XXXXXXXXXXX

DEPARTMENT: XXXXXXXXXXX

DWG. NO.: XXXXXXXXXXXXXXXXXXX

L&T-S&L JOB NO.: HO21005000

SCALE: X:XXX

SHEET: XX OF XX

REV. XX

A1 (841mm x 594mm)

THIS DRAWING AND DESIGN IS THE PROPERTY OF L&T - SARGENT & LUNDY LIMITED AND MUST NOT BE COPIED OR LENT WITHOUT THEIR PERMISSION IN WRITING.

(ALL DIMENSIONS ARE IN mm)

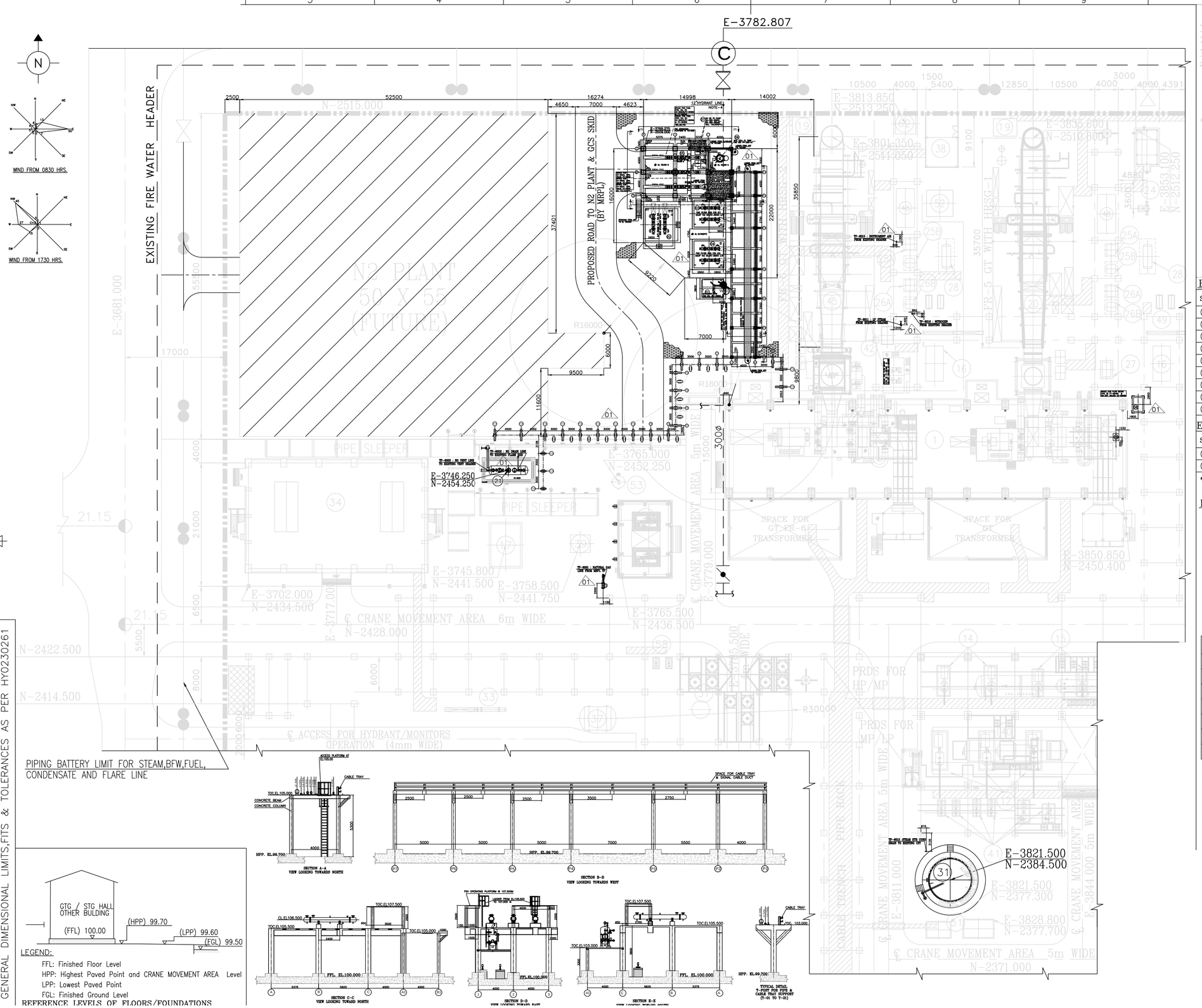

LEGEND:

FFL: Finished Floor Level
HPP: Highest Paved Point and CRANE MOVEMENT AREA Level
LPP: Lowest Paved Point
FGL: Finished Ground Level
REFERENCE LEVELS OF FLOORS/FOUNDATIONS

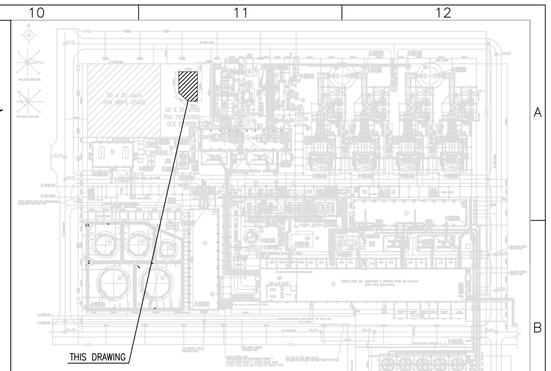

KEY PLAN
(N.T.S)

EQUIPMENT LIST (DIMESNIONS AND LOADING ARE PRELIMINARY)

SL.NO.	DESCRIPTION	QTY	SIZE (MM)	FOUNDATION SIZE L X B X H (MM)	WEIGHT(KG)
01	NG SCRUBBER SKID	01	3000 X 3800	3400 X 4200 X 300	6750 (FLOODED)
02	FILTER SEPARATOR SKID	01	4700 X 5500	5100 X 5900 X 300	6750 (FLOODED)
03	FINE FILTER SKID FOR GT-1	01	4600 X 5100	5000 X 5500 X 300	6750 (FLOODED)
04	FINE FILTER SKID FOR GT-2	01	4600 X 5100	5000 X 5500 X 300	6750 (FLOODED)
05	NATURAL GAS STEAM HEATER	03	6000 X ø508	450 X 250 (2 NOS)	4500 (FLOODED)
06	GAS HTR COND COL FLASH TANK	01	2000 X ø1500	----------	6000 (FLOODED)
07	GH DRAIN TRANSFER PUMP	02	1000 X 1000	1200 X 1200 X 300	2000 (FLODDED)
08	GAS VALVE MODULE FOR GT-1	01	2000 X 2800	----------	5000 (FLODDED)
09	CO2 RACK	01	1000 X 1200	1200 X 1400 X 300	5000 (FLODDED)

EXISTING EQUIPMENT LIST*

SL.NO.	DESCRIPTION	QTY	SIZE (MM)	FOUNDATION SIZE L X B X H (MM)	WEIGHT(KG)
31	CONDENSATE STORAGE TANK	01	10000 X ø8000	----	----
21	GAS CONDENSATE DRAIN TANK	01	3500 X ø1500	----	----

* SL. NO. OF EXISTING EQUIPMENTS ARE AS PER AS BUILT PLOT PLAN DWG 0-381-01-01015-S01-R12

REF. DRG NO. 01

1. PLOT PLAN : 0-381-01-01015-S01-R12
2. GAD OF NG SCRUBBER SKID : PY-VG-4-M161-2014-02
3. GAD OF NG FILTER SEPARATOR SKID : PY-VG-4-M161-2014-03
4. GAD OF NG STEAM HEATER : PY-VG-4-M161-2014-01
5. GAD OF CONDENSATE COLL FLASH TANK : PY-VD-4-M161-8330-01
6. GAD OF COND TRANSFER PUMP : PY-VZ-4-M161-8336-01
7. GAD OF NG FINE FILTER SKID : PY-VG-4-M161-2014-03
8. GAD OF GVM & CO2 RACK FOR GT-1 : 0-35928-51001
9. OVER ALL CABLE ROUTING FOR FUEL CONVERSION : PY-LC-0-M161-2001-01

LIST OF PIPING AT BATTERY POINT LACATION 01

SL.NO.	SERVICE	TIE POINT	BHEL TP PIPE SIZE	MRPL TP PIPE SIZE	LOCATION/COORDINATES
01	NATURAL GAS	TP-6001	6" CS	6" CS	E 3762395 N 2435000 U 100493
02	LP STEAM	TP-6011	4" CS	4" CS	E 3813096 N 2479000 U 111449
03	INSTRUMENT AIR	TP-6015	1" SS	1" SS	E 3812350 N 2493101 U 107230
04	NITROGEN	TP-6016	2" CS	2" CS	E 3814990 N 2480900 U 108230
05	FLARE HEADER	TP-6003	12" CS	12" CS	E 3742764 N 2454250 U 100450
06	GAS COND DRAIN	TP-6002	2" CS	2" CS	E 3747900 N 2454375 U 99320
07	STEAM COND	TP-6012	1.5" CS	2" CS	E 3817418 N 2389364 U 101900

NOTES:

1. ALL CO-ORDINATES ARE IN METERS.
2. ALL DIMENSIONS ARE IN MM.
3. EL 100.00 CORRESPONDS TO FFL OF GTG HALL CORRESPONDS TO SITE RL 20.50m.
4. EXISTING 12" FIRE HYDRANT LINE AS PER DWG NO: NFE-WBS-1241-D002-R4 INSIDE THE GCS HAS BEEN INDICATED. THIS LINE SHALL BE SUITABLY RELOCATED BY CUSTOMER.
5. ENTIRE GCS AREA, PIPE RACK AREA & ACCESS AREA FROM ROAD TO GCS AREA SHALL BE PAVED.

THE INFORMATION ON THIS DOCUMENT IS THE PROPERTY OF BHARAT HEAVY ELECTRICALS LIMITED. IT MUST NOT BE USED DIRECTLY OR INDIRECTLY IN ANY WAY DETRIMENTAL TO THE INTEREST OF THE COSMANY

GENERAL DIMENSIONAL LIMITS,FITS & TOLERANCES AS PER HY0230261

N. AND DATE	REF. DRG. NO.	COMPUTER FILE NAME

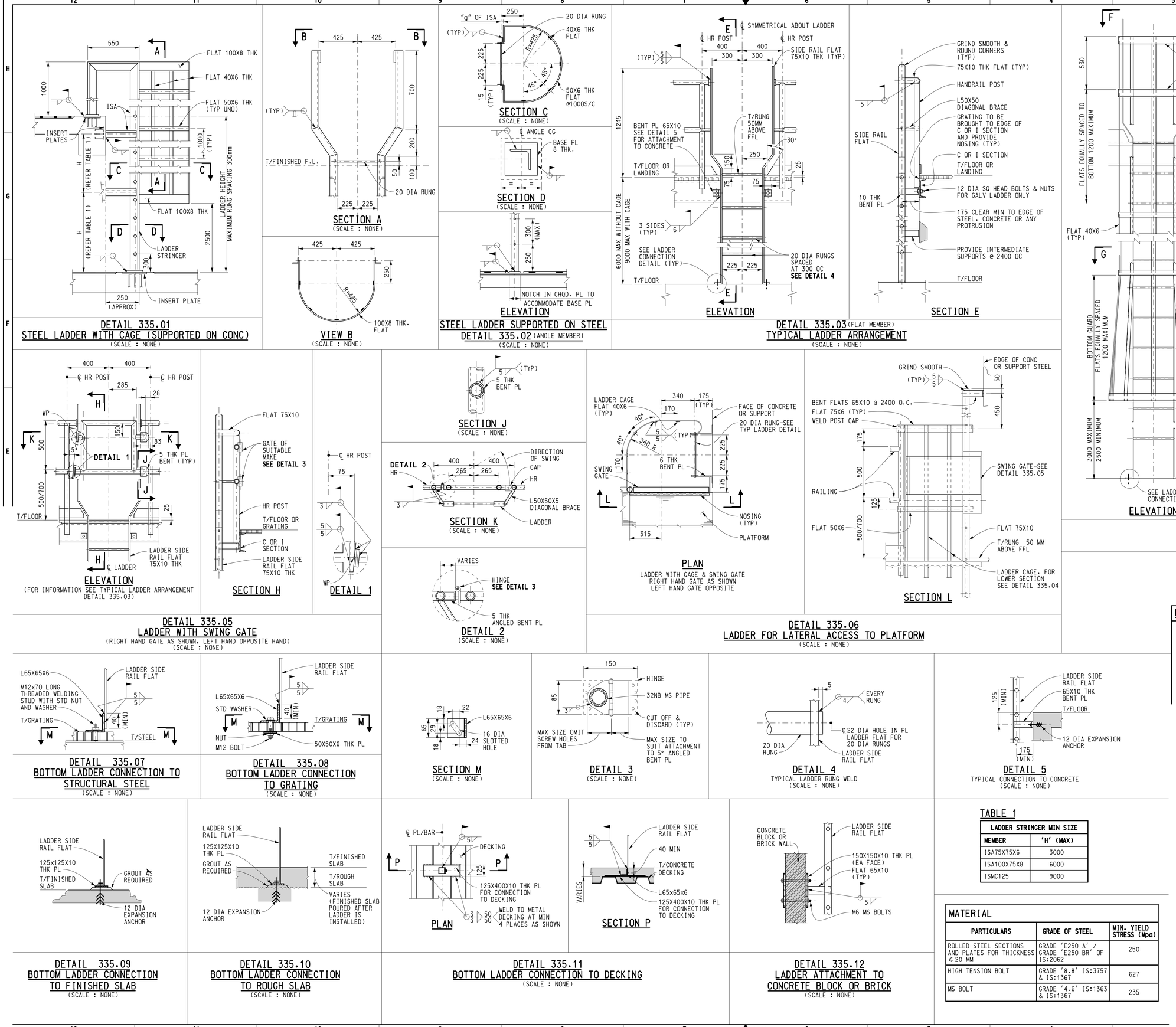

NOTES AND DETAILS SHOWN IN THIS DRAWING SHALL BE MODIFIED/ADDED/REMOVED AS PER PROJECT REQUIREMENT.

NOTES:

01. ALL DIMENSIONS ARE IN MM, LEVELS AND CO-ORDINATES ARE IN METRES UNLESS OTHERWISE SPECIFIED.
02. FOR GENERAL NOTES, ABBREVIATION, LEGENDS AND SYMBOLS REFER DWG NO. XXXXXXX-UV01-00-UZ2-160301 & XXXXXXX-UV01-00-UZ2-160302.
03. CONNECTION DETAILS COVERED UNDER STANDARD DRAWINGS ARE FOR REFERENCE TO SUGGEST TYPICAL CONNECTION DETAIL, ERECTION PLAN. HOWEVER, EXACT CONNECTION DESIGN CALCULATION AND DETAILING BASED ON ACTUAL FIT UP AND ERECTION REQUIREMENT, SHALL BE DONE BY FABRICATOR/ ERECTOR.
07. DETAILS OF MINOR DIMENSIONS NOT SHOWN ARE LEFT TO THE FEBRICATORS DISCRETION.

TABLE 1

LADDER STRINGER MIN SIZE	
MEMBER	'H' (MAX)
ISA75X75X6	3000
ISA100X75X8	6000
ISMC125	9000

MATERIAL

PARTICULARS	GRADE OF STEEL	MIN. YIELD STRESS (Mpa)
ROLLED STEEL SECTIONS AND PLATES FOR THICKNESS ≤ 20 MM	GRADE 'E250 A' / GRADE 'E250 BR' OF IS:2062	250
HIGH TENSION BOLT	GRADE '8.8' IS:3757 & IS:1367	627
MS BOLT	GRADE '4.6' IS:1363 & IS:1367	235

VOLUME - II: TECHNICAL SECTION

2 - MECHANICAL WORKS TECHNICAL SPECIFICATION AND TENDER DRAWINGS

TABLE OF CONTENTS

1.0 GENERAL

2.0 DRAWINGS

3.0 SITE RECORDS

4.0 MECHANICAL SCOPE OF WORK

5.0 TECHNICAL DESCRIPTION OF MECHANICAL SCOPE OF WORK

6.0 WELDING

7.0 REJECTION OF MATERIALS

8.0 DESPATCH

9.0 CODES AND STANDARDS

10.0 QUALITY

11.0 SURFACE PREPARATION AND PROTECTIVE COATING

12.0 INSULATION

13.0 ELECRICAL SCOPE OF WORK

14.0 VENDOR LIST

SKETCHES

Sketches-01 : LP Steam Tap-Off from Existing LP Steam Line

Sketches-02 : Nitrogen Tap-Off from Existing Nitrogen Line

Sketches-03 : New Fire Hydrant Line and Re-Routing of the Existing Fire Water

ANNEXURES:

Annexure-1 : Steam Line Piping Material Specification

Annexure-2 : Nitrogen and Fire Line Piping Material Specification

Annexure-3 : Electrical Bill of Material and Specification.

1.0 GENERAL

Mangalore Refinery & Petrochemicals Limited (MRPL) is setting up Natural Gas Firing Provision in GTG1 & GTG2 Project of MRPL CPP3 Unit. The scope of this tender enumerates supply & execution of mechanical works & supply of cable trays/conduits items for the above facility.

The major mechanical works consist of the following:

Sl. No.	Facilities
1	Steam Tap-off from existing LP steam line
2	Nitrogen Tap-off from existing Nitrogen line
3	New Fire Hydrant Line And Re-Routing of The Existing Fire Water Monitor Line
4	Pipe support fabrication and erection for existing fuel gas line

The Bidder will be required to work in close co-ordination with other Bidders working in the area.

The Bidder will have to draw up the program of work in consultation with the Consultant and the project authorities to match with the overall project requirements.

2.0 DRAWINGS

The work shall be executed in accordance with the specification and the drawings issued for construction by Consultant. Only latest revisions of the drawings shall be followed. All old revisions shall be clearly marked 'SUPERCEEDED' and kept separately or destroyed as directed by Consultant.

Bidder shall have to submit red mark-up drawing incorporating the suitable modification (if any) carried out at site on construction drawing to prepare of AS-BUILT drawings by consultant.

3.0 SITE RECORDS

All works shall be recorded in appropriate proforma to be firmed up by the Bidder in consultation with the Consultant. Where ever required reference to drawings and clauses of specification shall be recorded in the correspondence.

Hindrance register, site order book, manpower deployment data and materials incoming records are to be maintained by the Bidder.

4.0 MECHANICAL SCOPE OF WORK

GENERAL

4.1 The work to be carried out under the scope of this specification covers the complete work of supply of material, unloading of materials from trucks/trailers, storing under safe custody, store management, store maintenance, shifting to erection site, fabrication, pre-assembly, erection, alignment, bolting, fastening, welding, cutting, grinding, insulation, dismantling & modification, radiography, levelling, adjusting, non-destructive testing, post weld heat treatment, hydraulic test, chemical cleaning, passivation, steam blowing, air / water flushing, pre- tests, wrapping & coating, painting, disposal of waste / debris / extra material, attending all punch list points. The work shall conform to dimensions and tolerances specified in various drawings, documents, etc that will be provided by Consultant. If any portion of the work is found to be defective in workmanship or not conforming to drawings or other specifications or not up to the satisfaction level of the consultant/owner, the Bidder shall dismantle and re-do the work duly replacing the defective materials at his cost failing which the work will be got done by Consultant at the risk and cost of the Bidder.

4.2 Statuary clearances from state/central government agencies, if required for this project, shall be obtained by the Bidder. The work to be performed under this specification consists of providing all labor, materials, construction equipment, tools and tackles, safety tools, scaffolding, supplies, transportation, all incidental items not shown or specified, but reasonably implied or necessary for successful completion of the work including Bidder's supervision and in strict accordance with the drawings and specifications. The nature of work shall generally involve shall cover the installation, fabrication, insulation, painting, testing and commissioning of above ground/ underground piping including supports, support steel, excavation, surface preparation, wrapping / coating. The scope also includes conducting various relevant quality control tests in the field or laboratories as and when required for the construction materials and also for the total work executed under this contract.

4.3 Bill of material provided in SOR is for contractor's benefits to establish approximate pipe lengths and quantity of fitting components and accessories. Fabrication and cutting margins are not considered in bill of materials. Contractor shall take appropriate margin for cutting and fabrication based on experience and include in the quote rate.

4.4 Contractor has to inform change in bill of material and get approval from consultant

/owner before proceed to procurement and execution work. Accordingly any increase in bill of material shall be adjusted with contractor based on Unit rate quote provided by contractor.

4.5 The scope would also include getting the approvals from the statutory authorities (like electrical inspector, labour officers, factory inspector and any other statutory authorities) and following up the matter with them for statutory approval/clearance wherever applicable.

4.6 All fees connected with the Bidder for testing his welders/men/workers, inspection, calibrating of his instruments and equipment, shall be paid by the Bidder. It shall be Bidder's responsibility to obtain approval of statutory authorities; wherever applicable for conducting of any work which comes under the purview of these authorities, any cost arising from this shall be Bidder's account. Bidder shall pay all other fees (fees for visits, inspection fees, hydraulic test fees, light up inspection fees, registration fees etc.). In case these inspections have to be repeated due to default / fault of the Bidder and fees have to be paid again, the Bidder shall have to bear the charges.

4.7 Bidder temporary facilities & stores area, lighting, barricading, arranging for drinking water, sanitary provisions, watch & ward and providing temporary facilities including power required for construction, Bidder site office, field offices, labor colony shall be by bidder. Power for site office will be provided at one location by owner on chargeable basis.

4.8 All the work shall be carried out as per the instructions of owner/consultant. Owner/consultant decision regarding the correctness of the work and method of working shall be final and binding on the Bidder.

4.9 The sequence of erection will be decided by the Consultant depending upon the availability of permit, work fronts, etc. No claims for extra payment from the Bidder will be entertained on the grounds of deviation from the methods and sequence of erection or for any reasons whatsoever.

4.10 All the necessary certificates, permit, licenses and approval required to carry out this work are to be arranged by the Bidder expeditiously at his cost.

4.11 The Bidder shall at his cost perform any services, tests, etc although not specified but nevertheless required for the completion of work.

4.12 At the completion of the work, offering it to the Consultant and getting the same

cleared & approved shall be Bidder's responsibility. Bidder shall do whatever necessary for liquidation of all the checklists arising out of inspection & review by Consultant /owner. These approvals & clearances shall be obtained in the form of documents in the formats prescribed by the consultant/owner.

4.13 Bidder to note that all wastage and surplus material used for the above scope of work shall be returned to owner periodically with reconciliation report.

4.14 All serviceable material including scrap shall be handed over to Engineer-In-Charge/MRPL Stores, within a lead of 5 kilometer. Disposal of unserviceable materials/debris etc., outside the refinery including any clearances/permissions in this regard, shall be in the scope of the contractor, which is applicable for the entire work of this contract. Wastage/scrap material shall be shifted to MRPL scrap yard.

4.15 During the course of execution of this contract, certain rework /modification /rectification / repairs / fabrication etc. will be necessary on account of design discrepancies and manufacturing defects and site operation /maintenance requirements. Bidder shall carryout such work / modification / rectification /fabrication/repairs etc promptly and expeditiously.

4.16 Bidder shall re-work / repair without any time and cost wherever applicable which is not up to the client satisfaction. Few **cases are listed below:**

- defective execution
- changes with respect to latest engineering drawing
- poor weld

4.17 All clarifications can be demanded and clarified before final price/before order acceptance.

4.18 The Bidder shall furnish all labor (supervisory, skilled, semi-skilled, unskilled and administrative), all erection materials, equipment, hardware and consumable materials as required for the complete installation, transport vehicles, mobile cranes, hydraulic jacks, all erection tools, tackles and equipment, precision levels including micro level, dial and other gauges, surface plates, straight edges, special tools like vacuum cleaners, blowers, pumps, air compressor and other miscellaneous equipment as necessary for hydro testing also as may be required for timely and efficient execution of the Bidder. All expenditure including taxes and incidentals in this connection will have to be borne by the Bidder. Specification and quality of erection material have to

be approved by Consultant before the same are used for work.

4.19 All tools and tackles should be tested as per statutory requirements and approved by authorised testing agencies. Test certificates needs to be furnished to the Consultant /owner whenever required.

4.20 All equipment shall be handled very carefully to prevent any damage or loss. No bare wire ropes, slings, etc shall be used for handling of the equipment without the specific permission of the Consultant /owner. All the Tools & tackles should have valid test certificate as per statutory requirements.

4.21 Access to site for inspection by engineers of Owner / their authorized representatives shall be made available by the Bidder at all times.

4.22 Welding, pre & post weld heat treatment and other non-destructive testing will be conducted by Bidder as per WPS, QAP or relevant code as instructed by the EIC. Bidder shall arrange suitable stress relieving induction heating machines with automatic recording device. WPS, QAP and welder qualification shall be approved by consultant.

4.23 All necessary NDT/Radiography as per applicable code is included in the scope of work of the Bidder. Bidder shall furnish all instruments, isotopes, films etc. for conducting radiography and equip himself fully. Necessary operators of all testing equipment shall be provided by the Bidder.

4.24 The work covered under this specification is of highly sophisticated nature requiring the best quality of workmanship for fabrication. The Bidder should ensure timely completion of work. The Bidder must have adequate quantity of tools, construction aids, equipment, etc. in his possession. He must also have on his rolls adequately trained qualified and experienced supervisory staff and skilled personnel.

4.25 The work shall be executed under the usual conditions affecting plant construction and in conjunction with numerous other operations at site. The Bidder and his personnel shall cooperate with the personnel of other agencies, co-ordinate his work with others and proceed in a manner that shall not delay or hinder the progress of work as a whole.

4.26 The Bidder shall coordinate his work with other suppliers/Bidders where their instruments and devices are to be installed under specifications. Coordination with other site contractors to carry out equipment erection or any installation activities at site

is in the scope of bidder.

4.27 All equipment shall be cleaned of all sand, dirt and other foreign materials immediately after removal from storage and before the equipment is brought to installation sites. All piping and tubes shall be air blown and cleaned properly.

4.28 The detailed construction drawings will be issued by the consultant. However preparation of schedule and obtaining the approval from the engineer-in-charge, explanatory sketches, and fabrication details etc. necessary to complete the work shall be in the scope of Bidder. The Bill of material included in the Bidding Document provides a general idea about the work to be performed under the scope of this contract. These are preliminary Bill of material for bidding purposes only and are by no means the final Bill of material or show the full range of the work under the scope. Work has to be executed according to latest drawings issued by the Consultant at the time of execution.

4.29 The scope of work also includes clearance of site of any scrap, debris, etc. before starting the work and recording spot levels at the site of work as well as storage areas. The cost of such clearance shall be included in the quoted rates. The Bidder shall also clear the construction site of all debris and construction materials before handing over.

4.30 The Mangalore terminal is in the coastal area and the water table/rainfall is expected to be very high. The Bidder shall adopt suitable continuous special dewatering methods as approved by the Consultant. The period for which the de- watering should be in effect shall be as directed by the Consultant. The cost of dewatering shall be borne by the Bidder if required.

4.31 While executing the works of this tender, necessary care is to be exercised to ensure that no damage is done to the existing system and the price quoted shall include cost of all such protective measures. Any damage caused to the existing facilities by the Bidder shall have to be rectified and restored to its original condition at his own cost.

4.32 Safe storage of all materials, procured by the Bidder or supplied by the customer, shall be arranged by the Bidder at his own cost. Any kind of damage, pilferage etc.to any material shall be replaced by the Bidder at his own cost without any impact on the work schedule.

4.33 HSE guideline of the MRPL shall be strictly followed by the Bidder.

4.34 Safety provisions are mandatory in the plant premises. Suitable barricading with tin

sheets etc., is to be ensured for the safety and warning signs to be provided wherever necessary.

4.35 Scaffolding, if used, shall be only with prior design approval. However, while erection of scaffolding; until the scaffolding is fit for use, it shall have caution signage of “UNSAFE FOR USE”. Scaffolding shall be certified for use by the contractor, safety tags to be provided and MRPL Contract worker's safety policy shall be strictly followed

4.36 Sign boards shall be made for buildings and roads, made of Prismatic Reflective Sheeting sticker/printed sticker of approved design and shade or as directed by the engineer-in-charge. Signage Sticker shall be fixed in the M.S. Sheet supported with M.S. pipe/tube embedded with concrete (bottom of the pipe) of required design, size and shape.

4.37 Representative product data sheets along with MRPL approved vendor shall be procured by the Contractor and submitted to the Purchaser / Engineer for approval before procurement. The representative samples shall be retained by the Purchaser / Engineer for future comparison and reference.

4.38 Ensure compliance of labor laws, regulations and other statutory requirements by the Bidder during the construction work.

4.39 Bidder is advised to visit and examine the site and its surrounding and shall familiarize himself of the existing facilities and environment and shall collect all require information for preparing and submitting the Tender and entering into the contract. Claims and objections due to negligence/ignorance of existing conditions or inadequacy of information will not be considered after submission of the Bid and during the contract period / after contract period. All costs for and associated with site visits shall be borne by the Bidder.

4.40 Bidder has to follow other requirement specified in MRPL engineering design basis provided with the tender.

4.41 Bidder shall spell out all the deviation against specification clause and requirement during bid stage. It is bidder’s responsibility to get clarification on all the deviation during bid stage. Any deviation after placement of order shall not be accepted.

4.42 Establishing site office and closed storage space(if required) is in the scope of bidder. Consultant/Owner will identify suitable location for Contractor site office & open area for storage anywhere inside the Refinery.

4.43 Transportation facilities for movement of workmen and materials will be in the scope of bidder

4.44 Work shall be carried out with valid work permits issued by MRPL

4.45 Cable trays, conduits and 3 inch IBR valves along accessories are to be free issued to LSTK contractor when requested by LSTK contractor. Required documentation to be maintained by BOP contractor for all free issue materials.

5.0 TECHNICAL DESCRIPTION OF MECHANICAL SCOPE OF WORK

5.1 Steam Tap-off from existing LP steam line.

Tap-off of 4” is to be taken from existing 4” LP steam line at a location finalized by engineering in charge. It shall be executed considering IBR requirements.

- Consultant will do engineering for tapping point and drawing for execution will be provided to successful bidder.
- 4” Tee with spool piece and one manual 4” Gate Valve are to be erected for isolation as per drawing provided by consultant to successful bidder.
- Tapping size: 4” with Schedule STD
- Piping Material: ASTM A 106 Gr B (Seamless)
- Please refer annexure-1 for piping material specification for more details.

5.2 Nitrogen Tap-off from existing Nitrogen line.

Tap-off of 2” is to be taken from existing 2” Nitrogen header line at a location finalized by engineering in charge.

- Consultant will do engineering for tapping point and drawing for execution will be provided to successful bidder.
- 2” Tee with spool piece and one manual 2” Gate Valve are to be erected for isolation as per drawing provided by consultant to successful bidder. Nitrogen will be tapped of from existing Nitrogen pipe line.
- Tapping size: 2” with Schedule Heavy.
- Piping Material: IS-1239 Part-1 (Welded).
- Please refer annexure-2 for piping material specification for more details.

5.3 New Fire Hydrant Line and Re-Routing of the Existing Fire Water Monitor Line

Installation of New Fire Hydrant

- For proposed new Fuel gas skids, new Hydrant and portable extinguishers along with accessories are required to execute as per drawing provided by consultant to successful bidder.
- Tapping for Hydrant is required to be taken from the existing fire water above ground ring main as per the drawings provided by Consultant to successful bidder.
- Pipe support shall be fabricated and erected as per engineering drawing provided by consultant to successful bidder.
- If required, bidder shall suggest modifying the routing provided in drawing based on site condition and feasibility. Bidder has to get approval from consultant /owner before proceed to execute the changes. Accordingly any increase in work shall be adjusted with contractor based on Unit rate quote provided by contractor.

Re-Routing of the Existing Fire Water Monitor Line

- Re-routing of the existing line and relocating of existing Water monitor (WM-01) with accessories are required to execute as per drawing provided by consultant to successful bidder.
- Contractor to use existing water monitor (WM-1) and its Isolation valve. Other all the required items shall be supplied by contractor as per annexure-3.
- Pipe support shall be fabricated and erected as per engineering drawing provided by consultant to successful bidder.
- If required, bidder shall suggest modifying the routing provided in drawing based on site condition and feasibility. Bidder has to get approval from consultant /owner before proceed to execute the changes. Accordingly any increase in work shall be adjusted with contractor based on Unit rate quote provided by contractor.
- Carrying out flushing, testing of fire water hydrant in coordination with Consultant/Owner shall be in the scope of bidder

5.4 Pipe support fabrication and erection for existing fuel gas line

- Pipe support shall be fabricated and erected as per engineering drawing for existing natural gas line provided by consultant to successful bidder.
- Painting of pipes and supports shall be in the scope of bidder.

Mode of Measurement:

All the items shall be measured separately under the relevant items or as specified in the schedule of rate.

Wherever, the weight is the criteria for payments (as per SOR), the measurement of the items shall be based on the calculated weight of steel installed in ton corrected to second place of decimal as per relevant engineering documents.

For dismantling works, bidder to carry out the actual weight of scrap materials and same shall be certified by RCM/EIC/MRPL for billing purpose or else methodology of measurement or calculation shall be finalized in co-ordination with RCM/EIC/MRPL.

Mode of Payment:

All the items shall be paid separately under the relevant item or as specified in the schedule of rate.

6.0 WELDING

6.1 WELDING PROCESSES

6.1.1 Welding of various materials shall be carried out using one or more of the following processes with the approval of the Engineer-in-charge.

- Shielded Metal Arc Welding process (SMAW)
- Gas Tungsten Arc Welding process (GTAW)

6.1.2 Automatic and semi-automatic welding processes shall be employed only with the express approval of the Engineer-in-charge. The welding procedure adopted and consumables used shall be specifically approved.

6.1.3 A combination of different welding processes could be employed for a particular joint only after duly qualifying the welding procedure to be adopted and obtaining the approval of engineer-in-Charge.

6.1.4 All small bore piping and steam lines, size ¾” and below shall be welded by TIG process for all type of joints, e.g. Butt Weld, Socket Weld, tee etc. Root Pass for all piping shall be welded by GTAW process.

6.1.5 All low hydrogen electrodes shall be baked at 350 °C in suitable furnace at site by the contractor.

6.1.6 Preheating/Post heating is mandatory for all type of Alloy steel piping welding joints.

6.1.7 Welding of Alloy steel butt joints should not be left incomplete for long hours, at least one third of the weld joint shall be completed in continuity.

6.2 WELDER'S QUALIFICATION

Only welders, who are qualified in accordance with the latest applicable requirements ASME Section IX/AWS D1.1/IBR and other relevant standards, shall be permitted to perform any welding work on the high pressure piping and critical piping. In addition to such statutory qualification requirements, the welders shall also undergo a satisfactory pre-production qualification test to be conducted by the Bidder at site as per ASME Section IX/AWS D1.1/IBR and other relevant standards in presence of /Consultant Owner's representative(s), prior to performing work under these specifications. The services of an independent testing laboratory shall be retained by the Bidder to perform welder qualification tests for welds as per consultant /owner requirement. All the welders carrying out welding at site shall carry an identification badge, which shall indicate the category and the grade of welding for which they have been tested and authorised to carry out welding.

7.0 REJECTION OF MATERIALS

7.1 Any material brought to site which, in the opinion of the Consultant is damaged, contaminated, deteriorated or does not comply with the requirement of this specification shall be rejected and replaced.

7.2 If the routine tests or random site tests show that any of the materials, brought to site, do not comply in any way with the requirements of this specification or of IS codes as applicable, then that material shall be rejected. The Bidder at his own cost shall remove from site any and all such rejected material within the time specified by the Consultant.

7.3 Any erection work found unsatisfactory in respect of quality or in non- conformity to the contract shall be removed/rectified to the satisfaction of the engineer-in-charge by the Bidder at his own cost. The decision of engineer in-charge shall be the final and binding on the Bidder.

7.4 All materials shall be subjected to inspection and testing. The Bidder shall submit samples for testing as may be required by the Consultant. Sampling and testing shall be carried out by the Bidder at his cost in accordance with relevant IS Standards. Third party testing, if necessary, shall be done by the Bidder and the cost for the same shall be borne by the Bidder.

8.0 DESPATCH

All items shall be dry, clean and free from moisture, dirt and loose foreign material of all kinds.

All items shall be protected from rust, corrosion, and mechanical damage during transportation, shipment and storage.

Rust preventive on machined surfaces to be welded shall not be harmful to welding and shall be easily removable with a petroleum solvent.

Ends shall be suitably protected, and the protectors shall be securely and tightly attached.

Each variety and size of item shall be supplied in separate packaging marked with the purchase order no., item code (if available), and the salient specifications.

Carbon steel, LTCS and low alloy steel valves shall be painted with one coat of inorganic zinc silicate primer.

9.0 CODES AND STANDARDS

9.1 All applicable standards, acts, specifications, codes of practice, handbook referred to herein shall be the latest editions, including all official amendments and revisions. In case of discrepancy between this specification and those referred to herein, this specification shall govern. Any special materials used, but not covered here, shall conform to relevant Indian Standards, if any, or as specified by the Purchaser / Engineer for any special purpose.

9.2 In the event of state, city or other local governmental bodies having requirements, more stringent than those set forth in this specification, the former shall govern.

9.3 Some of the applicable Standards, Codes are referred to here below:

IBR:	Indian Boiler Regulation
ASME BPV Sec II Part C.	Material specifications: Welding rods, electrodes and filler metals
IS	Indian Standard
API-600	Gate Valve

Pipe / Valves / Fittings Ends

Unless otherwise specified, the ends shall be to the following standard:

SW/SCRD:	ASME B16.11
BW:	ASME B16.25
FLANGED:	ASME B16.5 and ASME B16.47 SERIES 'B'
THREADING:	ASME/ANSI B1.20.1 (NPT, Taper threads)

Flange Face Finish

This shall be to MSS-SP-6/ASME B46.1/ASME B16.5/ B16.47. The interpretation shall be as follows:

Stock Finish:	250-1000 μ in AARH
Serrated Finish /Smooth Finish/125 AARH:	125-250 μ in AARH
Extra Smooth Finish/63 AARH:	32-63 μ in AARH

9.4 The additional requirements mentioned in this specification, over and above those obligatory as per codes, shall be followed wherever specified.

9.5 Wherever codes / standard are referred, they shall be latest edition / publication as on date irrespective of the date of finalization of the work.

9.6 IBR stands for Indian Boiler Regulation. For steam services, it is statutory obligation to meet IBR requirements. For items under IBR, composition restrictions, test reports, painting, etc. shall be as per IBR's stipulations.

9.7 All materials used on lines falling under IBR must be accompanied with Inspection Certificate/ relevant forms as per IBR 1950 in original. Alternatively, photocopy of the original certificate duly countersigned and attested by local boiler inspector is acceptable.

9.8 All welders used for fabrication of IBR system must possess IBR welding qualification certificate in equivalent category.

10.0 QUALITY

10.1 A high standard of quality is required for all materials used in construction work. They shall be the best of the kind obtainable indigenously in each case and shall be procured from manufacturers of repute in order to ensure uniformly of quality and assurance of timely supply.

10.2 The manufacturer shall furnish written copies of Quality/ shop procedures these shall include procedures for magnetic particle, radiographic, ultrasonic testing and other

NDT methods as well as welding and welding repair procedures.

10.3 As system is put into service, the Bidder shall conduct all tests needed to ascertain that it shall perform properly in all respects with manpower assistance provided.

10.4 Bidder to submit Field Quality Plan (FQP), WPS, PQR and testing procedures for all items and auxiliaries in Bidder's scope, for the consultant/Owner's review and approval.

10.5 All items and their parts shall be subjected to all mandatory as well as supplementary (wherever specified) tests and checks called for in the respective codes/standards /data sheets.

10.6 The examining personnel shall have the requisite qualification and experience. Client and its authorized representative reserve the right to vet and suggest changes in vendor's procedures.

10.7 Vendor's works and facilities shall be accessible to the Client/Representative at all reasonable times.

10.8 Test reports for all mandatory as well as supplementary tests wherever specified shall be furnished.

10.9 Inspection & testing shall be per approved QAP.

10.10 NDE Requirements

- For LP Steam service shall have 100% radiography on weld joints.
- For Nitrogen service shall have 100% radiography on weld joints.
- For Fire service shall have 100% DP tests.

11.0 SURFACE PREPARATION AND PROTECTIVE COATING

Please refer relevant MRPL engineering design basis provided with the tender for Painting Specification.

12.0 INSULATION

Bidder shall use Rock Wool (IS 8183 - 1993 Gr.4) for insulation in LP steam line as per annexure-3.

Ancillary Materials

Securement Bands I Wires

1. If material is Aluminium, then specification shall be ASTM B209 Alloy 3003 Hl6 or IS:737 designation 31000 (Old NS3) condition H3; If Stainless Steel, it shall be 18/8.
2. For securing fibrous insulation
   A. On Piping

      Band, 24 SWG thick x l2mm (min) wide, Stainless Steel.

   B. On Equipments

      Band, 24 SWG thick x 20 mm wide, Stainless Steel.

   C. On Vertical Storage Tanks

      Band, Stainless Steel, 25mm wide x 24 SWG thick.

   D. Horton Sphere

      16 SWG Ss Wire & Band, Stainless Steel, 25mm wide x 0.8mm (min.) thk.
3. For Securing Rigid Insulation
   A. On Piping upto 16" OD

      Wire, stainless steel, 16 SWG.

   B. On Piping 18" OD & Larger, Vertical and Horizontal equipments

      Band, stainless steel. 20 wide x 24 SWG thick.
4. For Securing Cladding on Insulation (all types)
   A. For Piping

      Band, SS 12mm (min) wide x 24 SWG thick.

   B. On Equipment

13.0 ELECRICAL SCOPE OF WORK – SUPPLY OF CABLE TRAYS

The electrical scope of work shall include the design, manufacturing, testing at manufacturer's works, supply and delivery, properly packed for transport to site, unloading and proper storage at designated location at site and handover to LSTK contractor on consultant's/owner's approved request for all cable trays, supports and accessories.

The scope of supply shall include but not limited to the following:

a) Straight run of cable trays

b) Horizontal bend

c) Vertical inner and outer bend

d) Horizontal tee

e) Coupler plates

f) Nuts, bolts & washers

All the cable trays, supports and accessories shall be supplied as per the requirements mentioned in the specification Annexure – 3.

14.0 SKETCHES

Sketches-01 : LP Steam Tap-Off from Existing LP Steam Line

Sketches-02 : Nitrogen Tap-Off from Existing Nitrogen Line

Sketches-03 : New Fire Hydrant Line and Re-Routing of the Existing Fire Water

Sketches-01 : LP Steam Tap-Off from Existing LP Steam Line

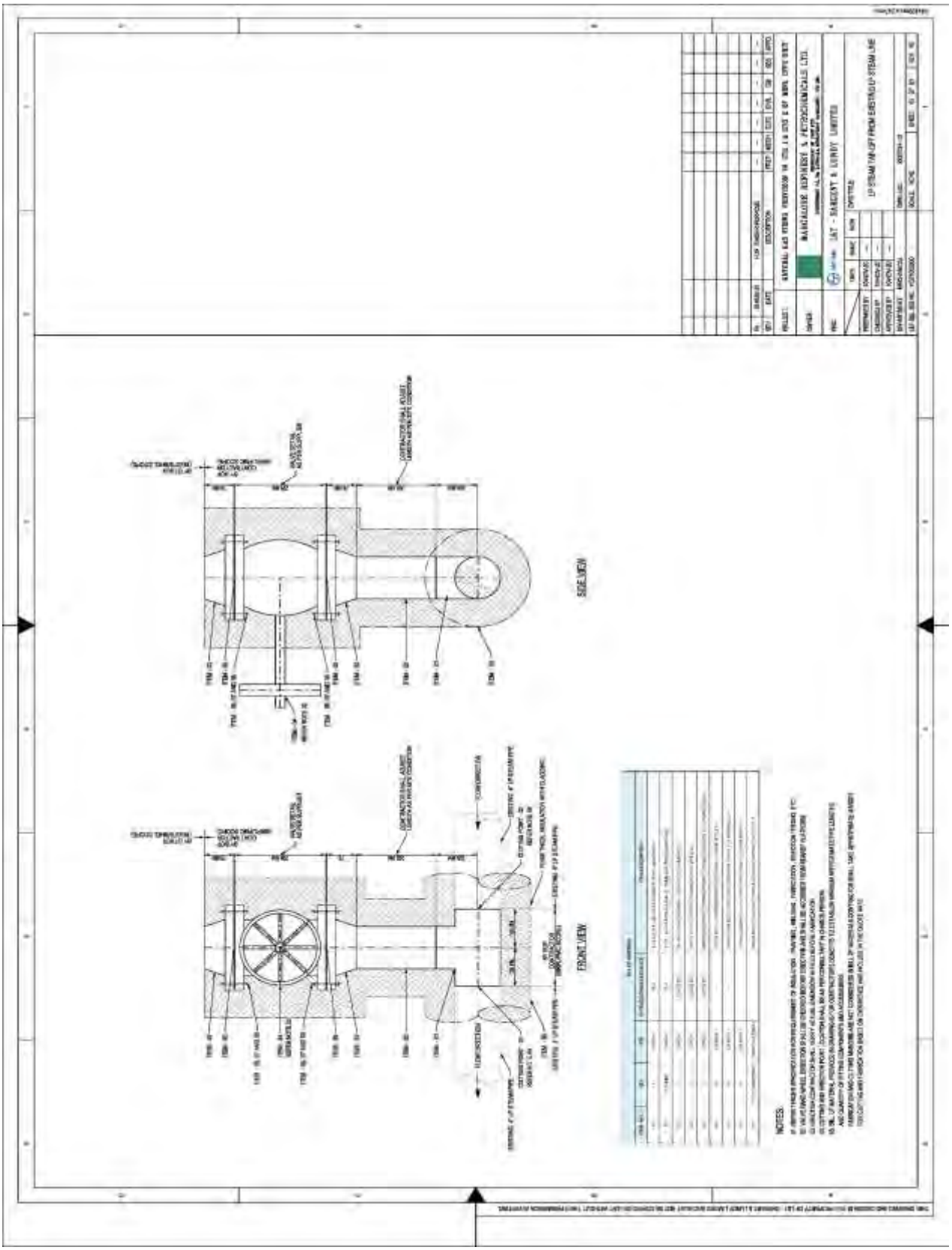

Sketches-02 : Nitrogen Tap-Off from Existing Nitrogen Line

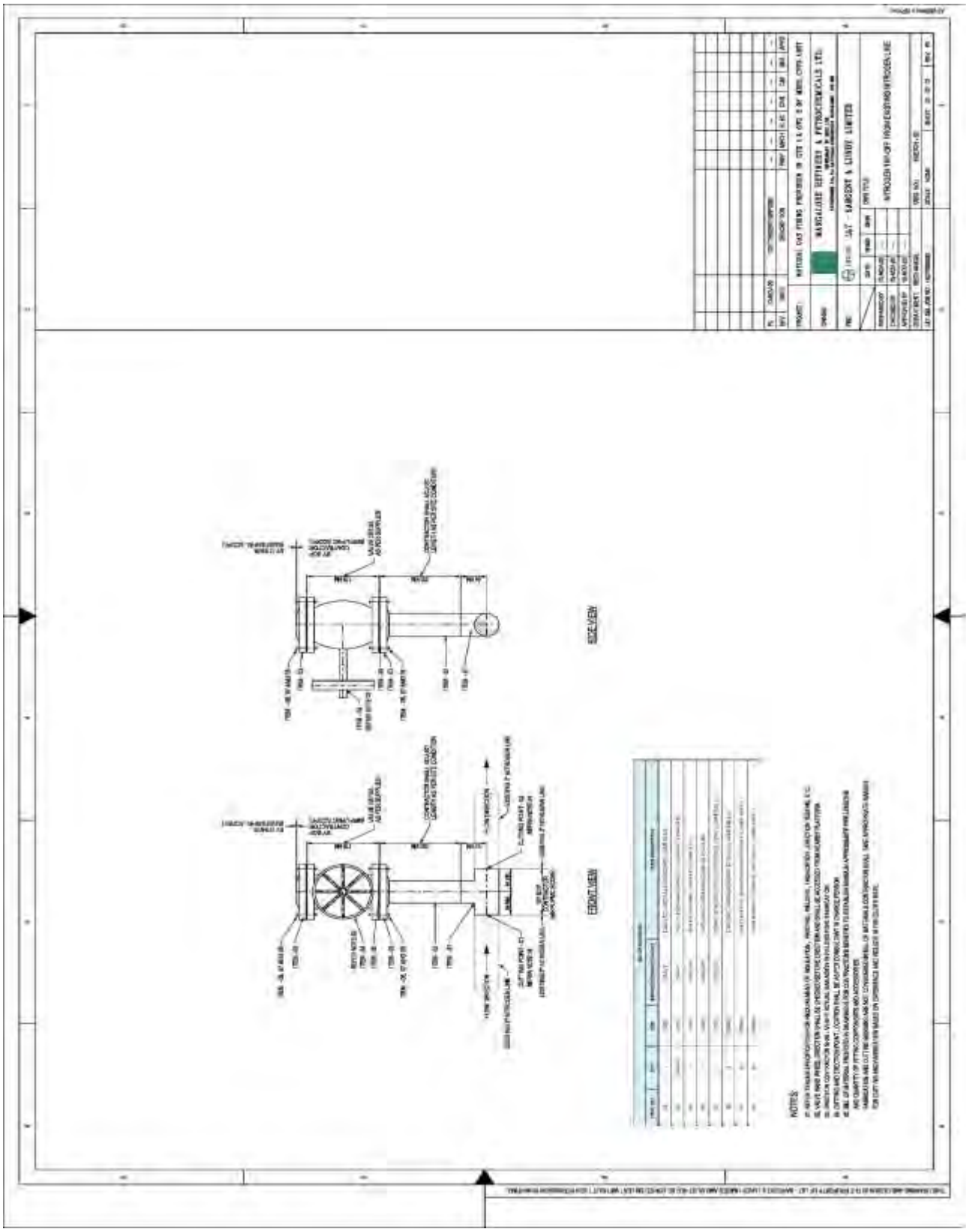

Sketches-03 : New Fire Hydrant Line and Re-Routing of the Existing Fire Water

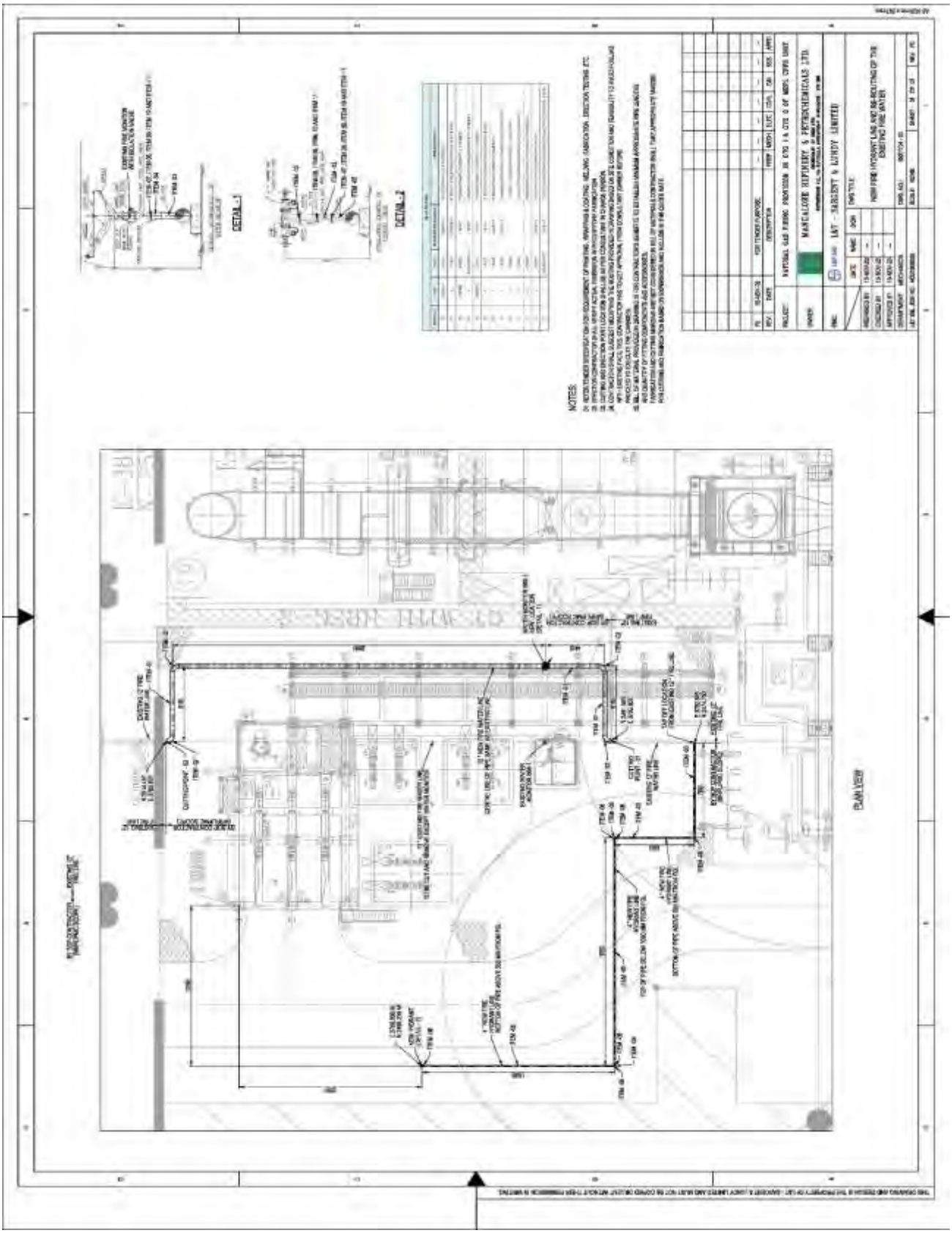

15.0 ANNEXURES:

Annexure-1: Steam Line Piping Material Specification

Annexure-2: Nitrogen and Fire Line Piping Material Specification

Annexure-3: Electrical Bill of Material and Specification.

PIPING MATERIAL SPECIFICATION 380-GTG-NG-003

Client : MRPL	Dept./Sect.: 16/43
Project : NATURAL GAS FIRING PROVISION IN GTG 1 & GTG 2	
Location : MANGALORE	Pipe Class : A2A Sheet 1 of 6

PIPECLASS : **A2A**
RATING : 150
BASEMATERIAL : CARBON STEEL
CORROSIONALLOWANCE: 1.5MM
SPECIALREQFIREMENT: IBRSERVICE

TEMPERATFRE (Deg. C) AND PRESSFRE (Kg/Sq. cm g) RATINGS

TEMP	0	38	93	149	204	260	280	300
PRESS	20.03	20.03	18.28	16.17	14.06	11.95	11.19	10.44

SERVICE

STEAM (IBR), BOILER FEED WATER (IBR) & CONDENSATE (IBR)

NOTES

3 USE PIPE OF CLASS 22 INSTEAD OF CLASS 12 IF PIPE THICKNESS EXCEEDS 19.05MM.

5 FOR PERMANENT 'T' TYPE BW STRAINERS,REFER STD ; AND FOR TEMPORARY STRAINERS,REFER STD ; FOR SPACER AND BLIND REFER TD .

7 FOR RESTRICTION ON USE OF BALL,PLUG& BUTTERFLY VALVES,REFER GENERAL NOTES.

8 ALL PIPES,FITTINGS,VALVES,FLANGES,TRAPS AND STRAINERS SHALL BE TESTED AND TEST CERTIFICATE IN FORM III A FOR PIPE AND FORM III C FOR OTHERS SHALL BE REQD. DULY COUNTERSIGNED BY IBR AUTHORITY OR ITS APPROVED REPRESENTATIVE.

9 CARBON CONTENT SHALL NOT EXCEED 0.25% FOR ALL PIPES,FITTINGS FLANGES ETC. THAT MAY REQUIRE WELDING.MOREOVER,FORFLANGESTHESULPHURANDPHOSPHOROUSSHALLALSOBELIMITEDTO0.05%EACH.

73 GATEVALVESOFSIZE26"ANDABOVESHALLBEINACCORDANCEWITHBS-1414ANDFLANGEENDSSHALLBEIN ACCORDANCE WITH ASME B16.47 SERIES B.

120 THIS ITEM IS INTENDED SOLELY FOR USE BY INSTRUMENTATION.

121 ASBESTOS FREE GASKETS AND STEM PACKING SHALL BE USED FOR ALL VALVES

143 NDT REQUIREMENT AS PER STANDARD B038-6-44-0016

192 "STD" THICKNESS SELECTED TO MATCH THICKNESS WITH "B2A" TO HAVE INTERCHANGEBILITY.

SPECIAL NOTES

ITEM	SIZE	DESCRIPTION	A.CODE
MAINTAINENCE JOINTS	ALL	FLANGED, TO BE KEPT MINIMUM	
PIPE JOINTS	1.5" & BELOW	SW COUPLING	
	2.0" & ABOVE	BUTTWELDED	
DRAINS	ON LINES <= 1.5"	REFER STD	
	ON LINES >= 2.0"	AS PER P&ID OR 0.75". REFER STD.	
VENTS	ON LINES <= 1.5"	REFER STD.	
	ON LINES >= 2.0"	AS PER P&ID OR 0.75". REFER STD	
TEMP.CONN	1.5"	FLANGED. REFER STD	
PRESS.CONN	0.75"	SW NIPPLE WITH VALVE TO SPEC AS PER STD	

TENDER NO. 3200000352 PAGE NO. 710

Client :	MRPL	**Dept./Sect.:**	16/43
Project :	NATURAL GAS FIRING PROVISION IN GTG 1 & GTG 2		
Location :	MANGALORE	**Pipe Class :**	A2A — Sheet 2 of 6

BRANCH PIPE (SIZE IN INCHES)	.500	.750	1.000	1.250	1.500	2.000	2.500	3.000	3.500	4.000	5.000	6.000	8.000	10.000	12.000	14.000	16.000	18.000	20.000	22.000	24.000	26.000	28.000	30.000	32.000	34.000	36.000	BRANCH PIPE (SIZE IN INCHES)
72.																												72.
70.																												70.
68.																												68.
66.																												66.
64.																												64.
62.																												62.
60.																												60.
58.																												58.
56.																												56.
54.																												54.
52.																												52.
50.																												50.
48.																												48.
46.																												46.
44.																												44.
42.																												42.
40.																												40.
38.																												38.
36.																											T	36.
34.																										T	R	34.
32.																									T	R	R	32.
30.																								T	R	R	R	30.
28.																							T	R	R	R	R	28.
26.																						T	R	R	R	R	R	26.
24.																					T	R	R	R	R	R	R	24.
22.																												22.
20.																			T		R	R	R	R	R	R	R	20.
18.																		T	R		R	R	R	R	R	R	R	18.
16.																	T	R	R		R	R	R	R	R	R	R	16.
14.																T	R	R	R		R	R	R	R	R	R	R	14.
12.															T	R	R	R	R		R	R	R	R	R	R	R	12.
10.														T	R	R	R	R	R		R	R	R	R	R	R	R	10.
8.0													T	P	R	R	R	R	R		R	R	R	R	R	R	R	8.0
6.0												T	P	P	P	R	R	R	R		R	R	R	R	R	R	R	6.0
5.0																												5.0
4.0										T		P	P	P	P	R	R	R	R		R	R	R	R	R	R	R	4.0
3.5																												3.5
3.0								T		P		P	P	P	P	R	R	R	R		R	R	R	R	R	R	R	3.0
2.5																												2.5
2.0						T		R		R		P	P	P	R	R	R	R	R		R	R	R	R	R	R	R	2.0
1.5					T	T		H		H		H	H	H	H	H	H	H	H		H	H	H	H	H	H	H	1.5
1.25																												1.25
1.0			T		T	H		H		H		H	H	H	H	H	H	H	H		H	H	H	H	H	H	H	1.0
0.75		T	T		T	H		H		H		H	H	H	H	H	H	H	H		H	H	H	H	H	H	H	0.75
0.5	T	T	T		T	H		H		H		H	H	H	H	H	H	H	H		H	H	H	H	H	H	H	0.5

RFN PIPE (SIZE IN INCHES)

CODE	DESCRIPTION				
F	SADDLE FUSED JT	T	TEES	J	THREADOLET
H	H. COUPLING	W	WELDOLETS		
P	PIPE TO PIPE	I	INSTRUMENT TEE		
R	REINFORCED	X	Refer Notes		
S	SOCKOLETS	L	SWEEPOLET		

TENDER NO- 3200000352 PAGE 711

Client : MRPL	Dept./Sect.: 16/43
Project : NATURAL GAS FIRING PROVISION IN GTG 1 & GTG 2	
Location : MANGALORE	Pipe Class : A2A Sheet 3 of 6

Note :(The shaded portion of PMS body shows Field Fabricated Items)

Input Id.	Item Type	Lower Size (Inch)	FpperSize (Inch)	Sch/ Thk	Dmn. STD	Material	Description		Note No
Pipe Group									
PIP	PIPE	0.50	1.50	XS	B-36.10	ASTM A 106 GR.B	PE, SEAMLESS		
PIP	PIPE	2.00	6.00	STD	B-36.10	ASTM A 106 GR.B	BE, SEAMLESS		
PIP	PIPE	8.00	12.00	S20	B-36.10	ASTM A 106 GR.B	BE, SEAMLESS		
PIP	PIPE	14.00	14.00	S10	B-36.10	ASTM A 106 GR.B	BE, SEAMLESS		
PIP	PIPE	16.00	20.00	6.0	B-36.10	ASTM A 672 GR.B60 CL.12	BE, E.FS.W		
PIP	PIPE	22.00	24.00	8.0	B-36.10	ASTM A 672 GR.B60 CL.12	BE, E.FS.W		
PIP	PIPE	26.00	36.00	STD	B-36.10	ASTM A 672 GR.B60 CL.12	BE, E.FS.W		192
NIP	NIPPLE	0.50	0.75	M	B-36.10	ASTM A 106 GR.B	PBE, SEAMLESS		
NIP	NIPPLE	1.00	1.50	M	B-36.10	ASTM A 106 GR.B	PBE, SEAMLESS		
Flange Group									
FLG/600	FLNG.SW	0.50	1.50	M	B-16.5	ASTM A 105	600, RF/125AARH		
FLG/300	FLNG.SW	0.50	1.50	M	B-16.5	ASTM A 105	300, RF/125AARH		
FLG	FLNG.WN	0.50	24.00	M	B-16.5	ASTM A 105	150, RF/125AARH		
FLG	FLNG.WN	26.00	36.00	M	B-16.47-B	ASTM A 105	150, RF/125AARH		
FLG/600	FLNG.WN	2.00	24.00	M	B-16.5	ASTM A 105	600, RF/125AARH		
FLG/300	FLNG.WN	26.00	36.00	M	B-16.47-B	ASTM A 105	300, RF/125AARH		
FLG/300	FLNG.WN	2.00	24.00	M	B-16.5	ASTM A 105	300, RF/125AARH		
FLB	FLNG.BLIND	0.50	24.00		B-16.5	ASTM A 105	150, RF/125AARH		
FLB	FLNG.BLIND	26.00	36.00		B-16.47-B	ASTM A 105	150, RF/125AARH		
FEF	FLNG.FIG.8	0.50	8.00		ASME-B16.48	ASTM A 105	150, FF/125AARH		
FEF	SPCR&BLND	10.00	24.00		ASME-B16.48	ASTM A 105	150, FF/125AARH		
FEF	SPCR&BLND	26.00	36.00		STD	ASTM A 516 GR.70	150, FF/125AARH		
Fitting Group									
ELB90	ELBOW.90	0.50	1.50		B-16.11	ASTM A 105	SW, 3000		

TENDER No. 3200000352 PAGE No. 712

Client : MRPL	**Dept./Sect.:** 16/43
Project : NATURAL GAS FIRING PROVISION IN GTG 1 & GTG 2	
Location : MANGALORE	**Pipe Class :** A2A Sheet 4 of 6

Note :(The shaded portion of PMS body shows Field Fabricated Items)

Input Id.	Item Type	Lower Size (Inch)	FpperSize (Inch)	Sch/ Thk	Dmn. STD	Material	Description		Note No
Fitting Group									
ELB90	ELBOW.90	2.00	14.00	M	B-16.9	ASTM A 234 GR.WPB	BW, 1.5D		
ELB90	ELBOW.90	16.00	36.00	M	B-16.9	ASTM A 234 GR.WPB-W	BW, 1.5D		
ELB45	ELBOW.45	0.50	1.50		B-16.11	ASTM A 105	SW, 3000		
ELB45	ELBOW.45	2.00	14.00	M	B-16.9	ASTM A 234 GR.WPB	BW, 1.5D		
ELB45	ELBOW.45	16.00	36.00	M	B-16.9	ASTM A 234 GR.WPB-W	BW, 1.5D		
TEQ	T.EQUAL	0.50	1.50		B-16.11	ASTM A 105	SW, 3000		
TEQ	T.EQUAL	2.00	14.00	M	B-16.9	ASTM A 234 GR.WPB	BW		
TEQ	T.EQUAL	16.00	36.00	M	B-16.9	ASTM A 234 GR.WPB-W	BW		
TRED	T.RED	0.50	1.50		B-16.11	ASTM A 105	SW, 3000		
TRED	T.RED	2.00	14.00	M, M	B-16.9	ASTM A 234 GR.WPB	BW		
TRED	T.RED	16.00	36.00	M, M	B-16.9	ASTM A 234 GR.WPB-W	BW		
REDC	REDUC.CONC	2.00	14.00	M, M	B-16.9	ASTM A 234 GR.WPB	BW		
REDC	REDUC.CONC	16.00	36.00	M, M	B-16.9	ASTM A 234 GR.WPB-W	BW		
REDE	REDUC.ECC	2.00	14.00	M, M	B-16.9	ASTM A 234 GR.WPB	BW		
REDE	REDUC.ECC	16.00	36.00	M, M	B-16.9	ASTM A 234 GR.WPB-W	BW		
SWGC	SWAGE.CONC	0.50	3.00	M, M	BS-3799	ASTM A 105	PBE		
SWGE	SWAGE.ECC	0.50	3.00	M, M	BS-3799	ASTM A 105	PBE		
CAP	CAP	0.50	1.50		B-16.11	ASTM A 105	SCRF, 3000		120
CAP	CAP	2.00	36.00	M	B-16.9	ASTM A 234 GR.WPB	BW		
CPLF	CPLNG.FULL	0.50	1.50		B-16.11	ASTM A 105	SW, 3000		
CPLH	CPLNG.HALF	0.50	1.50		B-16.11	ASTM A 105	SW, 3000		
CPLL	CPLNG.LH	0.50	1.50		B-16.11	ASTM A 105	SW, 3000		
CPLR	CPLNG.RED	0.50	1.50		B-16.11	ASTM A 105	SW, 3000		

TENDER NO·3200000352 PAGE 713

Client : MRPL	Dept./Sect.: 16/43
Project : NATURAL GAS FIRING PROVISION IN GTG 1 & GTG 2	
Location : MANGALORE	Pipe Class : A2A Sheet 5 of 6

Note :(The shaded portion of PMS body shows Field Fabricated Items)

Input Id.	Item Type	Lower Size (Inch)	FpperSize (Inch)	Sch/ Thk	Dmn. STD	Material	Description		Note No
Valves Group									
GAV	VLV.GATE	0.50	1.50		API-602	BODY-ASTM A 105,TRIM-STELLITED,STEM-13%CR STEEL	SW, 800, 3000, B-16.11, SHT NO.- 51002		
GAV	VLV.GATE	2.00	36.00		API-600	BODY-ASTM A 216 GR.WCB,TRIM-13% CR STEEL	FLGD, 150, B-16.5, RF/125AARH, SHT NO.- 51302		73
GLV	VLV.GLOBE	0.50	1.50		BS-5352	BODY-ASTM A 105,TRIM-STELLITED,STEM-13%CR.STEEL	SW, 800, 3000, B-16.11, SHT NO.- 52002		
GLV	VLV.GLOBE	2.00	16.00		BS-1873	BODY-ASTM A 216 GR.WCB,TRIM-13% CR STEEL	FLGD, 150, B-16.5, RF/125AARH,SHT NO.- 52302		
GLV	VLV.GLOBE	18.00	18.00		BS-1873	BODY-ASTM A 216 GR.WCB,TRIM-13% CR.STEEL	FLGD, 300, B-16.5, RF/125AARH, SHT NO.- 52392		
CHV	VLV.CHECK	0.50	1.50		BS-5352	BODY-ASTM A 105,TRIM-STELLITED	SW, 800, 3000, B-16.11, SHT NO.- 53002		
CHV	VLV.CHECK	2.00	24.00		BS-1868	BODY-ASTM A 216 GR.WCB,TRIM-13% CR STEEL	FLGD, 150, B-16.5, RF/125AARH, SHT NO.- 53302		
BLV	VLV.BALL	0.50	1.50		BS-5351	BODY-ASTM A 105 / A 216GR.WCB,TRIM-BODY SEAT-PEEK	FLGD, 150, B-16.5, RF/125AARH, SHT NO.- 54302		
BLV	VLV.BALL	2.00	4.00		BS EN ISO 17292	BODY-A105/A 216GR.WCB,TRIM-BODY SEAT : RPTFE	FLGD, 150, B-16.5, RF/125AARH, SHT NO.- 54921		
MIS	VLV.MISC	2.00	8.00		ANSI-B-16.34	BODY-ASTM A 216 GR.WCB,TRIM-13% CR.STEEL	FLGD, 150, B-16.5, RF/125AARH, SHT NO.- 59920		
ANV	VLV.ANGLE	1.50	2.00		MNF'STD	BODY-ASTM A 216 GR.WCB/A105,TRIM-13% CR.STEEL	FLGD, 150, B-16.5, RF/125AARH, SHT NO.- 60398		
ANV	VLV.ANGLE	1.50	2.00		MNF'STD	BODY-ASTM A 216 GR.WCB/A105,TRIM-13% CR STEEL	FLGD, 150, B-16.5, RF/125AARH, SHT NO.- 60397		
G3V	VLV.PISTON	0.50	1.50		MNF'STD	BODY-ASTM A 105,TRIM-13% CR.STEEL	SW, 800, 3000, B-16.11, SHT NO.- 64092		
Bolt Group									
BOS	BOLT.STUD	0.50	36.00		B-18.2	BOLT:A193 GR.B7, NUT:A194 GR.2H			
Gasket Group									
GAS	GASKET	0.50	24.00		B-16.20-ANSI B16.5	SP.WND SS316+GRAFIL	SPIRAL, 150		

TENDER NO- 3200000352 PAGE 714

Client : MRPL	**Dept./Sect.:** 16/43
Project : NATURAL GAS FIRING PROVISION IN GTG 1 & GTG 2	
Location : MANGALORE	**Pipe Class :** A2A Sheet 6 of 6

Note :(The shaded portion of PMS body shows Field Fabricated Items)

Input Id.	Item Type	Lower Size (Inch)	FpperSize (Inch)	Sch/ Thk	Dmn. STD	Material	Description		Note No
Gasket Group									
GAS	GASKET	26.00	36.00		B-16.20-ANSI B16.47B	SP.WND SS316+GRAFIL+1 RING	SPIRAL, 150		
GAS/600	GASKET	0.50	24.00		B-16.20-ANSI B16.5	SP.WND SS316+GRAFIL	SPIRAL, 600		
GAS/300	GASKET	26.00	36.00		B-16.20-ANSI B16.47B	SP.WND SS316+GRAFIL+1 RING	SPIRAL, 300		
GAS/300	GASKET	0.50	24.00		B-16.20-ANSI B16.5	SP.WND SS316+GRAFIL	SPIRAL, 300		
Trap/Strainer Group									
TRP	TRAP.STEAM	0.50	1.50		MNF'STD	B:A105;T:13%CR;S:SS304	FLGD, THRMDNMC, 150,RF/125AARH		
TSR	STRNR.TEMP	1.50	24.00		STD	B:A516GR.70;INT:SS304	CONETYPE, 150,FF/125AARH		
PSR	STRNR.PERM	0.50	1.50		MNF'STD	B:A105;INT:SS304	SW, Y-TYPE, 800		
PSR	STRNR.PERM	2.00	24.00		MNF'STD	B:A216GR.WCB;INT:SS304	FLGD, Y-TYPE, 150,RF/125AARH		

TENDER NO.3200000352 PAGE 715

PIPING MATERIAL SPECIFICATION **380-GTG-NG-003**

Client : MRPL	**Dept./Sect.:** 16/43
Project : NATURAL GAS FIRING PROVISION IN GTG 1 & GTG 2	
Location : MANGALORE	**Pipe Class :** A3A Sheet 1 of 7

PIPECLASS : **A3A**
RATING : 150
BASEMATERIAL : CARBON STEEL
CORROSION ALLOWANCE : 1.5 MM
SPECIAL REQFIREMENT:

TEMPERATFRE (Deg. C) AND PRESSFRE (Kg/Sq. cm g) RATINGS

TEMP	0	38	50	65	100	150	186
PRESS	10.55	10.55	10.55	10.55	10.55	10.55	10.55

SERVICE

NON CORROSIVE UTILITIES (ABOVE GROUND) CATEGORY "D" FLUID -COOLING WATER,BEARING COOLING WATER,PLANTAIR,INERTGAS,CARBONDIOXIDE(DRY),NITROGEN,CONDENSATE&BOILERFEEDSUCTION(NONIBR). THIS CLASS DOES NOT COVER UNDERGROUND PIPING AND THE FIRE WATERSERVICE.

NOTES

6 FOR FABRICATED REDUCERS,REFER STD . FOR MITRES, REFER STD.

10 USE4-PIECE90DEG.MITREFOR8"&10",5-PIECE90DEG.MITREFORSIZESFROM12"TO54"AND6-PIECE90DEG. MITRE FOR SIZES 56" TO 80" (45 DEG. MITRE SHALL REQUIRE ONE PIECELESS.)

31 USEBUTTERFLYVALVESINSTEADOFGATEVALVESFROM10"ONWARDSINWATERSERVICEANDUPTO70DEGC. DESIGN PRESSURE FOR BUTTERFLY VALVES IS LIMITED UPTO 10BAR.

65 FORGINGS ARE ACCEPTABLE IN LIEU OF PLATE MATERIAL FOR BLIND FLANGES AND SPACER & BLINDS.

73 GATEVALVESOFSIZE26"ANDABOVESHALLBEINACCORDANCEWITHBS-1414ANDFLANGEENDSSHALLBEIN ACCORDANCE WITH ASME B16.47 SERIESB.

76 FOR PERMANENT BW STRAINERS,REFER STD ; AND FOR TEMPORARY STRAINERS,REFER STD .

77 FORSIZES>24",SPACER&BLINDSHALLBEDESIGNEDBYTHEMANUFACTURERASPERASMEB31.3.

86 BUTTERFLYVALVESFORTHESPECAREPN10RATEDWITHAMAXIMUMPRESSUREOF10.2KG/CM2G.

121 ASBESTOS FREE GASKETS AND STEM PACKING SHALL BE USED FOR ALLVALVES

128 ALLWELDEDPIPESSHALLBELONGITUDINALLYWELDEDTYPE.SPIRALLYWELDEDPIPESARENOTACCEPTABLE. NDT

143 REQUIREMENT AS PER STANDARDB038-6-44-0016

194 FOR CLASS RATING BEYOND 150# IN THIS CLASS, B1A(300#) PIPING CLASS SHALL BE APPLICABLE.

TENDER NO. 3200000352 PAGE 716

Client : MRPL	**Dept./Sect.:** 16/43
Project : NATURAL GAS FIRING PROVISION IN GTG 1 & GTG 2	
Location : MANGALORE	**Pipe Class :** **A3A** Sheet 2 of 7

SPECIAL NOTES

ITEM	SIZE	DESCRIPTION	A.CODE
MAINTAINENCE JOINTS	ALL	FLANGED, TO BE KEPT MINIMUM	
PIPE JOINTS	1.5" & BELOW	SW COUPLING 3000 LBS.	
	2.0" & ABOVE	BUTTWELDED	
DRAINS	ON LINES <= 1.5"	REFER STD	
	ON LINES >= 2.0"	0.75" OR AS PER P&ID. REFER STD.	
VENTS	ON LINES <= 1.5"	REFER STD.	
	ON LINES >= 2.0"	0.75" OR AS PER P&ID. REFER STD	
TEMP.CONN	1.5"	FLANGED. REFER STD	
PRESS.CONN	0.75"	SW, SH HVY NIPPLE WITH GATE VALVE TO SPEC AS PER STD	

717

TENDER NO. 3200000352 PAGE

Client :	MRPL	**Dept./Sect.:**	16/43
Project :	NATURAL GAS FIRING PROVISION IN GTG 1 & GTG 2		
Location :	MANGALORE	**Pipe Class :**	**A3A** Sheet 3 of 7

BRANCH PIPE (SIZE IN INCHES)	.500	.750	1.000	1.250	1.500	2.000	2.500	3.000	3.500	4.000	5.000	6.000	8.000	10.000	12.000	14.000	16.000	18.000	20.000	22.000	24.000	26.000	28.000	30.000			BRANCH PIPE (SIZE IN INCHES)
72.																											72.
70.																											70.
68.																											68.
66.																											66.
64.																											64.
62.																											62.
60.																											60.
58.																											58.
56.																											56.
54.																											54.
52.																											52.
50.																											50.
48.																											48.
46.																											46.
44.																											44.
42.																											42.
40.																											40.
38.																											38.
36.																											36.
34.																											34.
32.																											32.
30.																								T			30.
28.																							T	R			28.
26.																						T	R	R			26.
24.																					T	R	R	R			24.
22.																											22.
20.																			T		R	R	R	R			20.
18.																		T	P		R	R	R	R			18.
16.																	T	R	P		R	R	R	R			16.
14.																T	P	R	P		R	R	R	R			14.
12.															T	P	P	R	P		R	R	R	R			12.
10.														T	R	P	P	R	P		R	R	R	R			10.
8.0													T	P	R	P	P	R	P		R	R	R	R			8.0
6.0												T	P	P	R	P	P	R	P		R	R	R	R			6.0
5.0																											5.0
4.0										T		P	P	P	P	P	P	P	P		R	R	R	R			4.0
3.5																											3.5
3.0								T		P		P	P	P	P	P	P	P	P		R	R	R	R			3.0
2.5																											2.5
2.0						T		P		P		P	P	P	P	P	P	P	P		P	R	R	R			2.0
1.5					T	T		H		H		H	H	H	H	H	H	H	H		H	H	H	H			1.5
1.25																											1.25
1.0			T		T	H		H		H		H	H	H	H	H	H	H	H		H	H	H	H			1.0
0.75		T	T		T	H		H		H		H	H	H	H	H	H	H	H		H	H	H	H			0.75
0.5	T	T	T		T	H		H		H		H	H	H	H	H	H	H	H		H	H	H	H			0.5

RFN PIPE (SIZE IN INCHES)

CODE	DESCRIPTION				
F	SADDLE FUSED JT	T	TEES	J	THREADOLET
H	H. COUPLING	W	WELDOLETS		
P	PIPE TO PIPE	I	INSTRUMENT TEE		
R	REINFORCED	X	Refer Notes		
S	SOCKOLETS	L	SWEEPOLET		

TENDER NO· 3200000352 PAGE. 718

Client : MRPL	**Dept./Sect.:** 16/43
Project : NATURAL GAS FIRING PROVISION IN GTG 1 & GTG 2	
Location : MANGALORE	**Pipe Class :** A3A Sheet 4 of 7

Note :(The shaded portion of PMS body shows Field Fabricated Items)

Input Id.	Item Type	Lower Size (Inch)	FpperSize (Inch)	Sch/ Thk	Dmn. STD	Material	Description		Note No
Pipe Group									
PIP	PIPE	0.50	1.50	HVY	IS-1239-I	IS-1239 (BLACK)	PE, C.WELDED		
PIP	PIPE	2.00	6.00	HVY	IS-1239-I	IS-1239 (BLACK)	BE, C.WELDED		
PIP	PIPE	8.00	12.00	6.0	IS-3589	IS-3589 GR.330	BE, WELDED		
PIP	PIPE	14.00	18.00	8.0	IS-3589	IS-3589 GR.330	BE, WELDED		
PIP	PIPE	20.00	24.00	10.0	IS-3589	IS-3589 GR.330	BE, WELDED		
PIP	PIPE	26.00	30.00	12.0	IS-3589	IS-3589 GR.330	BE, WELDED		
NIP	NIPPLE	0.50	1.50	HVY	IS-1239-I	IS-1239 (BLACK)	PBE, C.WELDED		
Flange Group									
FLG	FLNG.SW	0.50	1.50	M	B-16.5	ASTM A 105	150, RF/125AARH		
FLG/300	FLNG.SW	0.50	1.50	M	B-16.5	ASTM A 105	300, RF/125AARH		
FLG/300	FLNG.WN	26.00	30.00	M	B-16.47-B	ASTM A 105	300, RF/125AARH		
FLG/300	FLNG.WN	2.00	24.00	M	B-16.5	ASTM A 105	300, RF/125AARH		
FLG	FLNG.SO	2.00	24.00		B-16.5	ASTM A 105	150, RF/125AARH		
FLG	FLNG.SO	26.00	30.00		AWWA-C207 CL.D	ASTM A 105	150, FF/125AARH		
FLB	FLNG.BLIND	0.50	24.00		B-16.5	ASTM A 105	150, RF/125AARH		
FLB	FLNG.BLIND	26.00	30.00		AWWA-C207 CL.D	ASTM A 285 GR.C	150, FF/125AARH		
FEF	FLNG.FIG.8	0.50	8.00		ASME-B16.48	ASTM A 105	150, FF/125AARH		
FEF	SPCR&BLND	10.00	24.00		ASME-B16.48	ASTM A 105	150, FF/125AARH		
FEF	SPCR&BLND	26.00	30.00		MNF'STD	ASTM A 285 GR.C	150, FF/125AARH		
Fitting Group									
ELB90	ELBOW.90	0.50	1.50		B-16.11	ASTM A 105	SW, 3000		
ELB90	ELBOW.90	2.00	6.00	STD	B-16.9	ASTM A 234 GR.WPB	BW, 1.5D		
ELB45	ELBOW.45	0.50	1.50		B-16.11	ASTM A 105	SW, 3000		
ELB45	ELBOW.45	2.00	6.00	STD	B-16.9	ASTM A 234 GR.WPB	BW, 1.5D		

TENDER NO. 3200000352 PAGE 719

Client : MRPL	**Dept./Sect.:** 16/43
Project : NATURAL GAS FIRING PROVISION IN GTG 1 & GTG 2	
Location : MANGALORE	**Pipe Class :** A3A Sheet 5 of 7

Note :(The shaded portion of PMS body shows Field Fabricated Items)

Input Id.	Item Type	Lower Size (Inch)	FpperSize (Inch)	Sch/ Thk	Dmn. STD	Material	Description		Note No
Fitting Group									
MIT90	MITRE.90	8.00	30.00	M	STD	IS-3589 GR.330	BW, 1.5D		
MIT45	MITRE.45	8.00	30.00	M	STD	IS-3589 GR.330	BW, 1.5D		
TEQ	T.EQUAL	0.50	1.50		B-16.11	ASTM A 105	SW, 3000		
TEQ	T.EQUAL	2.00	6.00	STD	B-16.9	ASTM A 234 GR.WPB	BW		
TEQ	T.EQUAL	8.00	30.00	M	B-16.9	ASTM A 234 GR.WPB-W	BW		
TRED	T.RED	0.50	1.50		B-16.11	ASTM A 105	SW, 3000		
TRED	T.RED	2.00	6.00	STD, STD	B-16.9	ASTM A 234 GR.WPB	BW		
TRED	T.RED	8.00	30.00	M, M	B-16.9	ASTM A 234 GR.WPB-W	BW		
REDC	REDUC.CONC	2.00	6.00	STD, STD	B-16.9	ASTM A 234 GR.WPB	BW		
REDC	REDUC.CONC	8.00	30.00	M, M	STD	IS-3589 GR.330	BW		
REDE	REDUC.ECC	2.00	6.00	STD, STD	B-16.9	ASTM A 234 GR.WPB	BW		
REDE	REDUC.ECC	8.00	30.00	M, M	STD	IS-3589 GR.330	BW		
SWGC	SWAGE.CONC	0.50	3.00	STD, STD	BS-3799	ASTM A 105	PBE		
SWGE	SWAGE.ECC	0.50	3.00	STD, STD	BS-3799	ASTM A 105	PBE		
CAP	CAP	0.50	1.50		B-16.11	ASTM A 105	SCRF, 3000		
CAP	CAP	2.00	6.00	STD	B-16.9	ASTM A 234 GR.WPB	BW		
CAP	CAP	8.00	30.00	M	B-16.9	ASTM A 234 GR.WPB	BW		
CPLF	CPLNG.FULL	0.50	1.50		B-16.11	ASTM A 105	SW, 3000		
CPLH	CPLNG.HALF	0.50	1.50		B-16.11	ASTM A 105	SW, 3000		
CPLL	CPLNG.LH	0.50	1.50		B-16.11	ASTM A 105	SW, 3000		
CPLR	CPLNG.RED	0.50	1.50		B-16.11	ASTM A 105	SW, 3000		
UNN	UNION	0.50	1.50		BS-3799	ASTM A 105	SW, 3000		
Valves Group									
GAV	VLV.GATE	0.25	1.50		API-602	BODY-ASTM A 105,TRIM-	SW, 800, 3000, B-16.11, SHT NO.- 51001		

TENDER NO. 3200000352 PAGE 720

PIPING MATERIAL SPECIFICATION

Client :	**Dept./Sect.:** 16/43
Project : NATURAL GAS FIRING PROVISION IN GTG 1 & GTG 2	
Location : MANGALORE	**Pipe Class :** A3A Sheet 6 of 7

Note :(The shaded portion of PMS body shows Field Fabricated Items)

Input Id.	Item Type	Lower Size (Inch)	FpperSize (Inch)	Sch/ Thk	Dmn. STD	Material	Description		Note No
Valves Group									
						STELLITED,STEM-13%CR.STEEL			
GAV	VLV.GATE	2.00	42.00		API-600	BODY-ASTM A 216 GR.WCB,TRIM-13% CR.STEEL	FLGD, 150, B-16.5, RF/125AARH, SHT NO.- 51301		73
GLV	VLV.GLOBE	0.25	1.50		BS-5352	BODY-ASTM A 105,TRIM-STELLITED,STEM-13%CR STEEL	SW, 800, 3000, B-16.11, SHT NO.- 52001		
GLV	VLV.GLOBE	2.00	16.00		BS-1873	BODY-ASTM A 216 GR.WCB,TRIM-13% CR.STEEL	FLGD, 150, B-16.5, RF/125AARH, SHT NO.- 52301		
CHV	VLV.CHECK	0.25	1.50		BS-5352	BODY-ASTM A 105,TRIM-STELLITED	SW, 800, 3000, B-16.11, SHT NO.- 53001		
CHV	VLV.CHECK	2.00	24.00		BS 1868	BODY-ASTM A 216 GR.WCB,TRIM-13% CR.STEEL	FLGD, 150, B-16.5, RF/125AARH, SHT NO.- 53301		
CHV	VLV.CHECK	26.00	48.00		API-594	BODY-ASTM A 105 / A 216GR.WCB,TRIM-13% CR.STEEL	FLGD, 150, AWWAC207, FF/125AARH, SHT NO.- 53316		
BLV	VLV.BALL	0.50	16.00		BS-5351	BODY-ASTM A 105 / A 216GR.WCB,TRIM-BODY SEAT-RPTFE	FLGD, 150, B-16.5, RF/125AARH, SHT NO.- 54301		
PLV	VLV.PLUG	0.50	1.50		BS-5353	BODY-ASTM A 105 / A 216GR.WCB,TRIM-HARDENED PLUG	FLGD, 150, B-16.5, RF/125AARH, SHT NO.- 55923		
BFV	VLV.BTRFLY	3.00	24.00		BS EN 593	BODY-ASTM A 216 GR.WCB,TRIM-13% CR.STEEL	WAFL, 150, B-16.5, WAF/125AARH, SHT NO.- 56392		
BFV	VLV.BTRFLY	26.00	48.00		BS EN 593	BODY-ASTM A 216 GR.WCB,TRIM-13% CR.STEEL	FLGD, 150, AWWAC207, FF/125AARH, SHT NO.- 56396		
Bolt Group									
BOS	BOLT.STUD	0.50	30.00		B-18.2	BOLT:A193 GR.B7, NUT:A194 GR.2H			
Gasket Group									
GAS	GASKET	0.50	24.00		B-16.21-ANSI B16.5	NONASBESTOS BS7531 GR X	RING, 150, 2 MM		
GAS	GASKET	26.00	30.00		AWWA-C207 CL.D	NONASBESTOS BS7531 GR X	FULLFACE, 150, 2 MM		

TENDER NO. 3200000352 PAGE 721

GAS/300	GASKET	26.00	30.00		B-16.20-ANSI B16.47B	SP.WND SS316+GRAFIL+ 1 RING	SPIRAL, 300		

Client : MRPL	**Dept./Sect.:** 16/43
Project : NATURAL GAS FIRING PROVISION IN GTG 1 & GTG 2	
Location : MANGALORE	**Pipe Class : A3A** Sheet 7 of 7

Note :(The shaded portion of PMS body shows Field Fabricated Items)

Input Id.	Item Type	Lower Size (Inch)	FpperSize (Inch)	Sch/ Thk	Dmn. STD	Material	Description		Note No
Gasket Group									
GAS/300	GASKET	0.50	24.00		B-16.20-ANSI B16.5	SP.WND SS316+GRAFIL	SPIRAL, 300		
Trap/Strainer Group									
TRP	TRAP.STEAM	0.50	1.50		MNF'STD	B:A105;T:13%CR;S:SS304	FLGD, THRMDNMC, 150,RF/125AARH		
TSR	STRNR.TEMP	1.50	24.00		STD	B:A285GR.C;INT:SS304	CONETYPE, 150,FF/125AARH		
PSR	STRNR.PERM	0.50	1.50		MNF'STD	B:A105;INT:SS304	SW, Y-TYPE, 800		
PSR	STRNR.PERM	2.00	6.00	M	STD	B:A234GR.WPB;INT:SS304	BW, T-TYPE		
PSR	STRNR.PERM	8.00	24.00	M	STD	B:A234GR.WPBW;INT:SS304	BW, T-TYPE		

ALL DIMENSIONS ARE IN mm.

REV.	DATE	ALTERED	CHECKED	APPROVED	REMARKS
01	10.10.2020	VARA PRASAD AKASAM	P SURESH	SAROJ KUMAR	Revised as per Latest GCS Area Layout
02	15.10.2020	VARA PRASAD AKASAM	P SURESH	SAROJ KUMAR	Revised as per Customer comments Dt. 13.10.2020
03	12.11.2020	VARA PRASAD AKASAM	P SURESH	SAROJ KUMAR	Revised as per Customer comments Dt. 16.10.2020 and subsequent online TEAMS meetings.

ANNEXURES-3 Electrical BOQ

BOQ OF CABLE TRAYS & STRUCTURAL SUPPORTS.

THE INFORMATION ON THIS DOCUMENT IS THE PROPERTY OF BHARAT HEAVY ELECTRICALS LIMITED.
IT MUST NOT BE USED DIRECTLY OR INDIRECTLY IN ANY WAY DETRIMENTAL TO THE INTEREST OF THE COMPANY.

COMPUTER NO.
REF. DRG. NO.
SIGN. & DATE
INVENTORY NO.

PROJECT: NATURAL GAS FIRING PROVISION IN GTG 1 & GTG 2 OF MRPL CPP-3 UNIT

OWNER: MANGALORE REFINERY & PETROCHEMICALS LTD
(SUBSIDIARY OF ONGC LIMITED)
KUTHETHOOR P.O. Via KATIPALLA, MOODAPADAV MANGALORE – 575030)

PMC: L&T – SARGENT & LUNDY LIMITED.

BHARAT HEAVY ELECTRICALS LTD.
HYDERABAD

	NAME	SIGN.	DATE	NO.OF VAR.
DRN.	VARA PRASAD AKASAM		26.09.2020	–N.A.–
CHD.	P SURESH		26.09.2020	
APPD.	SAROJ KUMAR		26.09.2020	

DEPT.	UNTOL. DIMS.	SCALE	WEIGHT (KG)	REF. TO ASSY. DRG.	ITEM NO.	NO.OF ITEMS
PE&SD CODE. 450	GR. ~~C/M/F~~	NTS	–N.A.–	–N.A.–	–N.A.–	–N.A.–

TITLE: BOQ OF CABLE TRAYS & STRUCTURAL SUPPORTS

CARD CODE: N.A.

BHEL DRG NO. PY–AB–4–M161–8908–01

CUST DRG NO.

REV. 03

SHT. No 1 | NO. OF SHT. 2

ESP–001–7A

PROJECT: MRPL FUEL CONVERSION

CABLE TRAYS BOQ (GI CABLE TRAYS)

Sl. No.	DESCRIPTION	MATERIAL CODE AS PER SPECIFICATON (Spec No. HY7433665 Rev. 02)	Length in Mtrs	QTY. (Nos.)	REMARKS
1	300mm width perforated type straight run cable tray along with accessories including coupler plates (2.5 mtr. length trays)	HY7433665048	183	74	
2	Cover along with accessories for 300mm perforated type cable tray (2.5 mtr. length covers)	HY7433665161	183	74	
3	Horizontal Bend of 600mm bending radius along with coupler plates for 300mm perforated type cable tray	HY7433665358	--	8	
4	Vertical Down of 600 mm bending radius along with coupler plates for 300mm width perforated type cable trays	HY7433665528	--	4	
5	Vertical Up of 600 mm bending radius along with coupler plates for 300mm width perforated type cable trays	HY7433665510	--	4	
6	150mm width ladder type straight run cable tray along with accessories including coupler plates - Type1 (2.5 mtr. length trays)	HY7433662057	189	76	
7	Cover along with accessories for 150mm width ladder type cable tray - Type1 (2.5 mtr. length covers)	HY7433662154	189	76	
8	50mm width perforated type straight run cable tray along with accessories including coupler plates (2.5 mtr. length trays)	HY7433665064	750	300	
9	Cover along with accessories for 50mm perforated cable tray (2.5 mtr. length covers)	HY7433665188	750	300	
10	STRUCTURAL STEEL		Quantity		
10.1	100 Mm Dia GI Conduit	--	20 Mtr.		
10.2	50 mm Dia GI Conduit	--	90 Mtr.		

ALL DIMENSIONS ARE IN mm.

REV.	DATE	ALTERED	REV.	DATE	ALTERED	REV.	DATE	ALTERED
01	15.10.2020	VARA PRASAD AKASAM	02	12.11.2020	VARA PRASAD AKASAM			
		CHECKED P SURESH			CHECKED P SURESH			CHECKED
		APPROVED SAROJ KUMAR			APPROVED SAROJ KUMAR			APPROVED
REVISED AS PER CUSTOMER COMMENTS			REVISED AS PER CUSTOMER COMMENTS ON BOQ OF CABLE TRAYS					

TECHNICAL SPECIFICATION FOR GI CABLE TRAYS

PROJECT: NATURAL GAS FIRING PROVISION IN GTG 1 & GTG 2 OF MRPL CPP-3 UNIT

OWNER: MANGALORE REFINERY & PETROCHEMICALS LTD
(SUBSIDIARY OF ONGC LIMITED)
KUTHETHOOR P.O. Via KATIPALLA, MOODAPADAV MANGALORE - 575030)

PMC: L&T - SARGENT & LUNDY LIMITED.

BHARAT HEAVY ELECTRICALS LTD.
HYDERABAD

	NAME	SIGN.	DATE	NO.OF VAR.
DRN.	VARA PRASAD AKASAM		26.09.2020	-N.A.-
CHD.	P SURESH		26.09.2020	
APPD.	SAROJ KUMAR		26.09.2020	

DEPT.	UNTOL. DIMS.	SCALE	WEIGHT (KG)	REF. TO ASSY. DRG.	ITEM NO.	NO.OF ITEMS
PE&SD	GR. ~~C/M/F~~	NTS	-N.A.-	-N.A.-	-N.A.-	-N.A.-
CODE. 450						

TITLE
TECHNICAL SPECIFICATION FOR GI CABLE TRAYS

CARD CODE N.A.

BHEL DRG NO. PY-AS-4-M161-8908-01

CUST DRG NO.

REV. 02

SHT. No 01 | NO. OF SHT. 41

Bidder's Seal & Signature

THE INFORMATION ON THIS DOCUMENT IS THE PROPERTY OF BHARAT HEAVY ELECTRICALS LIMITED.
IT MUST NOT BE USED DIRECTLY OR INDIRECTLY IN ANY WAY DETRIMENTAL TO THE INTEREST OF THE COMPANY.

COMPUTER NO. REF. DRG. NO. SIGN. & DATE INVENTORY NO.

RESTRICTED USE

Nov Thu 12 13:00 2020
This Drawing is printed from Engineering Digital Archive System (EDAS).
Therefore signatures are not essentially required.
ESB-001-7A

COPYRIGHT AND CONFIDENTIAL
The information on this document is the property of BHARAT HEAVY ELECTRICALS LIMITED,
It must not be used directly or indirectly in any way detrimental to the interest of the company.

TECHNICAL SPECIFICATION FOR GI CABLE TRAYS AND ACCESSORIES

1. SCOPE:

This specification governs the quality requirements of design, manufacture, testing, packing at manufacturers' work and delivery at site of various Cable Trays and accessories, as per requirements spelt out in this specification and complete in all respect.

2. APPLICABLE STANDARDS:

The cable trays and accessories shall comply to the latest edition of applicable Indian standards but not limited to the following:

IS-513: For cold rolled low carbon steel sheets and strips.
IS-816: For use of metal arc welding and for general construction in MS.
IS-1079: For hot rolled carbon steel sheets and strips specifications.
IS-2629: For practice of hot dip galvanising & adhesion test
IS-1363: For head bolts, screws and nuts.
IS-1367: For threaded steel fasteners.
IS-5986: For hot rolled steel plates, sheets, strips and flats for flanging & forming operation.

3. CONSTRUCTIONAL REQUIREMENTS:

a) All materials and hardwares to be supplied by the contractor shall be new , unused and of best quality and it shall confirm to the latest specifications of Bureau of Indian Standards

b) The cable trays and accessories such as coupler plates, Tees, horizontal cross, elbows and covers shall have rigid welded constructions and shall be fabricated out of minimum 2mm thick hot rolled sheet steel. Hot rolled sheet steel shall be procured from reputed vendors like SAIL / RINL / TISCO/ JINDAL / ESSAR STEEL.

c) The rungs shall be welded to the side runners in ladder type cable trays.

d) Hot dip galvanizing shall be done after fabrication as per relevant Indian standards. The amount of galvanizing shall be min. 610 g/m^2.

e) All the finished cable trays and accessories shall be free from sharp edges, corners, burrs and unevenness.

RESTRICTED USE

Bidder's Seal & Signature

COPYRIGHT AND CONFIDENTIAL
The information on this document is the property of BHARAT HEAVY ELECTRICALS LIMITED .
It must not be used directly or indirectly in any way detrimental to the interest of the company.

f) Cable trays shall be suitable for following cable weights and point loads(equivalent to weight of man working on the cable tray)

Width of cable tray	Cable weight	Point load at centre of cable tray
750 mm	120 kg/m	75 kg
600 mm	90 kg/m	75 kg
450 mm `	75 kg/m	75 kg
300 mm	60 kg/m	75 kg
150 mm	30 kg/m	Not applicable
50 mm	15 kg/m	Not applicable

permissible deflection under above loads with support span of 2.0 m is L/200mm or 10mm whichever is less.

g) All hardware and fittings like bolts, nuts, washers etc. shall be hard chrome or Cadmium plated or Zinc passivated.

g) Negative tolerances on thickness of cable tray and accessories are not acceptable. However tolerance of ± 1% is acceptable on length and width of cable tray and accessories.

i) Constructional, dimensional and sectional details of various types of GI cable trays and accessories are shown in the following enclosed specifications.

Ladder Type Cable Trays & Accessories (Channel design, Type-1): HY7433662

Ladder Type Cable Trays & Accessories (Channel design, Type-2): HY7433663

Ladder Type Cable Trays & Accessories (Angular design, Type-3) : HY7433664

Perforated Type Cable Trays & Accessories : HY7433665

Solid Bottom Cable Trays & Accessories : HY7433666

4. INSPECTIONS AND TESTS:

a) The following tests shall be carried out on all types of cable trays and accessories.

(i) Test for thickness of Galvanized coating by Elcometer.

(ii) Test for mass of Galvanized coating by stripping test.

Ref. Doc

RESTRICTED USE

Bidder's Seal & Signature

(iii) Test for determination of uniformity of Galvanized coating.

(iv) Load test for uniform point loading

b) Bidder shall have to submit all test reports as per manufacturer's standard quality assurance plan.

c) All the guaranteed technical particulars, valid test certificates/reports, manufacturer's standard quality plan are to be submitted by vendor for getting material despatch clearance.

COPYRIGHT AND CONFIDENTIAL
The information on this document is the property of BHARAT HEAVY ELECTRICALS LIMITED .
It must not be used directly or indirectly in any way detrimental to the interest of the company.

Ref. Doc

RESTRICTED USE

Bidder's Seal & Signature

GI PERFORATED TYPE CABLE TRAYS AND ACCESSORIES

1. This standard shall be read in conjunction with BHEL plant standard no. HY7433661, GI cable trays and accessories.

This standard covers the constructional, dimensional and sectional details of various types of GI perforated type cable trays and accessories and same are given in the following pages.

Copyright and Confidential
The information on this document is the property of BHARAT HEAVY ELECTRICALS LIMITED.
It must not be used directly or indirectly in any way detrimental to the interest of the company.

RESTRICTED USE

Nov Thu 12 13:00 2020
Bidder's Seal & Signature
This Drawing is printed from Engineering Digital Archive System (EDAS).
Therefore signatures are not essentially required.

TYPICAL ARRANGEMENT FOR PERFORATED TYPE STRAIGHT RUN CABLE TRAY ALONG WITH ACCESSORIES & COUPLER PLATES

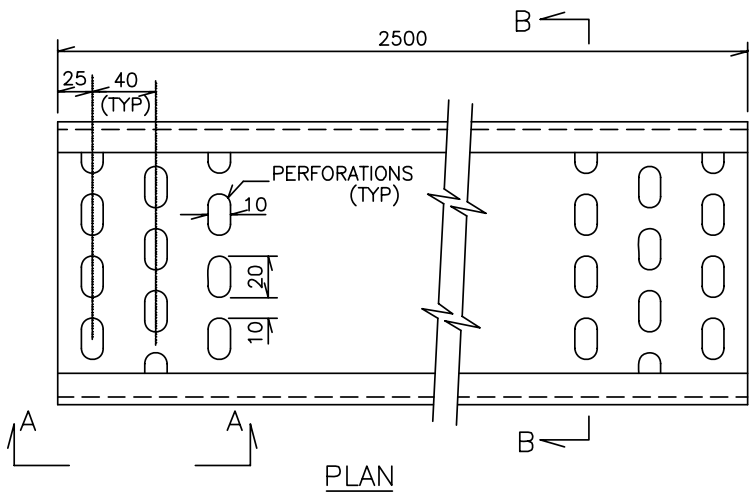

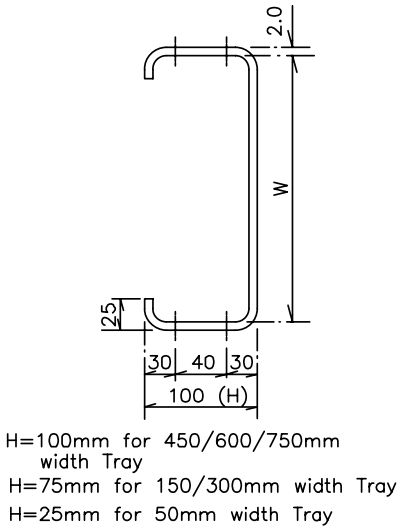

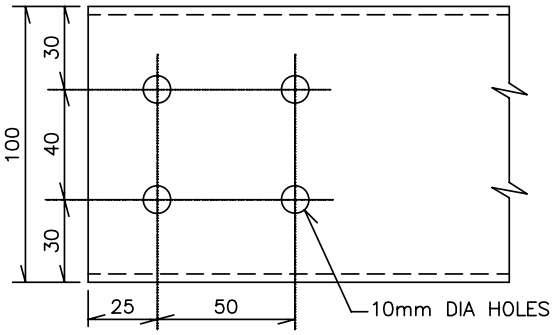

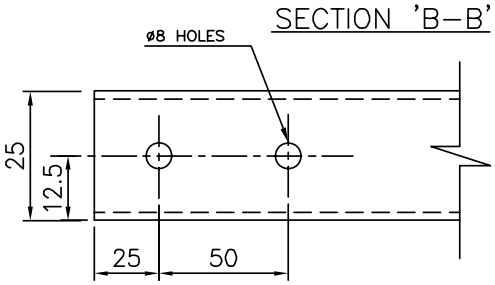

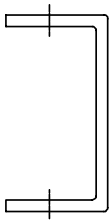

SECTION 'B–B' FOR 50mm TRAY

NOTEs

1. HEIGHT OF TRAY SIDE WALLS INDICATED HERE (100mm) IS TYPICAL ONLY. BIDDER MAY PLEASE INDICATE THE SAME AS PER THEIR STANDARD PRODUCTS AVAILABLE , SUITABLE FOR TRAYS OF 150/300/600MM.
2. HOWEVER RESERVES THE RIGHT TO DECIDE THE HEIGHT OF SIDE RAILS AND SAME TO BE INCORPORATED BY BIDDERS.
3. STRAIGHT RUN FOR PERFORATED TYPE CABLE TRAY, SHALL INCLUDE 2 Sets OF COUPLER PLATES ALONG WITH ACCESSORIES LIKE NUTS, BOLTS AND WASHERS, DETAILS OF THE SAME IS ATTACHED IN SHEET No 4 OF 18.
4. ALL DIMENSIONS ARE IN mm. NEGATIVE TOLERANCE ON THICKNESS OF CABLE TRAY & ACCESSORIES ARE NOT ACCEPTABLE. HOWEVER TOLERANCE OF ±1% IS ACCEPTABLE IN LENGTH & WIDTH OF CABLE TRAY & ACCESSORIES.
5. MATERIAL CODES FOR VARIOUS PERFORATED TYPE STRAIGHT RUN CABLE TRAY ARE GIVEN IN THE FOLLOWING PAGE
6. THE DETAILS SHOWN IN THE DRAWING ARE TYPICAL FOR PERFORATED TYPE CABLE TRAYS.

COPYRIGHT AND CONFIDENTIAL
The Information on this document is the property of BHARAT HEAVY ELECTRICALS LIMITED.
It must not be used directly or indirectly in any way detrimental to the interest of the company.

RESTRICTED USE

Nov Thu 12 13:00 2020
This Drawing is printed from Electronic System (EDAS).
Therefore signatures are not essentially required.

MATERIAL CODES FOR PERFORATED TYPE STRAIGHT RUN CABLE TRAY ALONG WTH ACCESSORIES AND COUPLER PLATES

VAR NO	DESCRIPTION	MATERIAL CODE
01	750 mm WIDTH PERFORATED TYPE STRAIGHT RUN CABLE TRAY ALONG WITH ACCESSORIES INCLUDING COUPLER PLATES	HY7433665013
02	600 mm WIDTH PERFORATED TYPE STRAIGHT RUN CABLE TRAY ALONG WITH ACCESSORIES INCLUDING COUPLER PLATES	HY7433665021
03	450 mm WIDTH PERFORATED TYPE STRAIGHT RUN CABLE TRAY ALONG WITH ACCESSORIES INCLUDING COUPLER PLATES	HY7433665030
04	300 mm WIDTH PERFORATED TYPE STRAIGHT RUN CABLE TRAY ALONG WITH ACCESSORIES INCLUDING COUPLER PLATES	HY7433665048
05	150 mm WIDTH PERFORATED TYPE STRAIGHT RUN CABLE TRAY ALONG WITH ACCESSORIES INCLUDING COUPLER PLATES	HY7433665056
06	50 mm WIDTH PERFORATED TYPE STRAIGHT RUN CABLE TRAY ALONG WITH ACCESSORIES INCLUDING COUPLER PLATES	HY7433665064

COPYRIGHT AND CONFIDENTIAL
The Information on this document is the property of BHARAT HEAVY ELECTRICALS LIMITED.
It must not be used directly or indirectly in any way detrimental to the interest of the company.

RESTRICTED USE

This Drawing is printed from ... tem (EDAS). The ... ally required.

TYPICAL ARRANGEMENT FOR COUPLER PLATE SET ALONG WITH ACCESSORIES FOR PERFORATED TYPE CABLE TRAYS

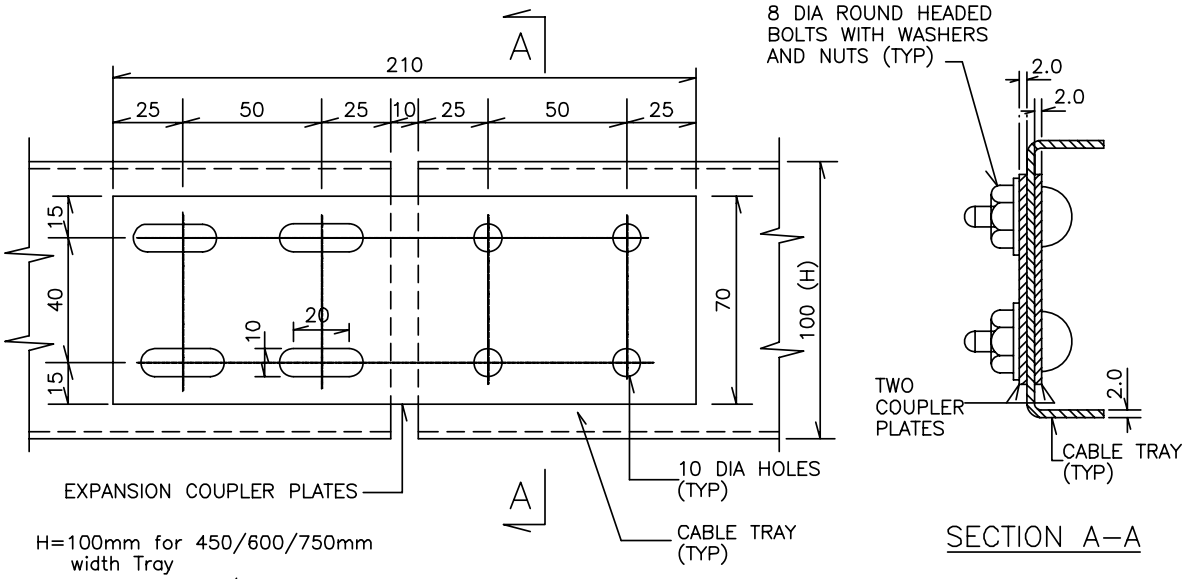

H=100mm for 450/600/750mm width Tray
H=75mm for 150/300mm width Tray
H=25mm for 50mm width Tray

SECTION A–A

TYPICAL ARRANGEMENT FOR COUPLER PLATE SET ALONG WITH ACCESSORIES FOR 50mm PERFORATED TYPE CABLE TRAYS

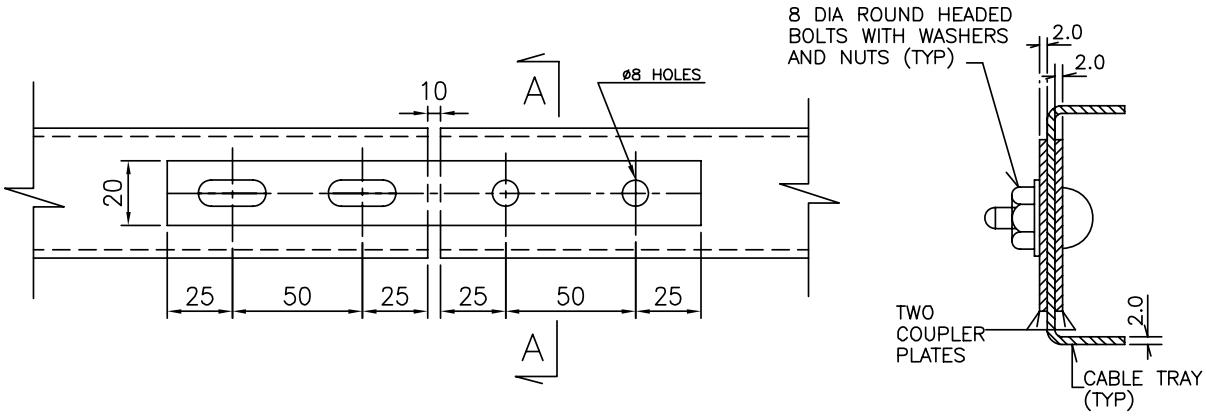

SECTION A–A

NOTES

1. ALL DIMENSIONS ARE IN mm. NEGATIVE TOLERANCE ON THICKNESS OF CABLE TRAY & ACCESSORIES ARE NOT ACCEPTABLE. HOWEVER TOLERANCE OF ±1% IS ACCEPTABLE IN LENGTH & WIDTH OF CABLE TRAY & ACCESSORIES.
2. TWO COUPLER PLATES TO BE PROVIDED ONE EACH ON EITHER SIDE OF TRAY.
3. ONE SET OF COUPLER PLATE WITH ACCESSORIES SHALL INCLUDE 2 NOs. OF COUPLER PLATES 8 NOs. OF NUTS, BOLTS AND 16 NOs. OF WASHERS.
4. MATERIAL CODES FOR LOOSE SUPPLY OF COUPLER PLATE WITH ACCESSORIES FOR VARIOUS TYPES OF PERFORATED TYPE CABLE TRAYS, ARE GIVEN IN THE FOLLOWING PAGE.
5. BOLTS SHALL BE ROUND HEADED AS INDICATED IN THE DRAWING. HEXAGONAL TYPE BOLTS ARE NOT ACCEPTABLE.

COPYRIGHT AND CONFIDENTIAL
The Information on this document is the property of BHARAT HEAVY ELECTRICALS LIMITED.
It must not be used directly or indirectly in any way detrimental to the interest of the company.

RESTRICTED USE

BHEL-HYD EDAS
Tender Document System (EDAS).
Partially required.

MATERIAL CODES FOR COUPLER PLATE SETS INCLUDING ACCESSORIES FOR PERFORATED TYPE CABLE TRAYS (IN CASE OF LOOSE SUPPLY)

VAR NO	DESCRIPTION	MATERIAL CODE
07	COUPLER PLATES SET ALONG WITH ACCESSORIES FOR 750 mm PERFORATD TYPE CABLE TRAY	HY7433665072
08	COUPLER PLATES SET ALONG WITH ACCESSORIES FOR 600 mm PERFORATD TYPE CABLE TRAY	HY7433665080
09	COUPLER PLATES SET ALONG WITH ACCESSORIES FOR 450 mm PERFORATD TYPE CABLE TRAY	HY7433665099
10	COUPLER PLATES SET ALONG WITH ACCESSORIES FOR 300 mm PERFORATD TYPE CABLE TRAY	HY7433665102
11	COUPLER PLATES SET ALONG WITH ACCESSORIES FOR 150 mm PERFORATD TYPE CABLE TRAY	HY7433665110
12	COUPLER PLATES SET ALONG WITH ACCESSORIES FOR 50 mm PERFORATD TYPE CABLE TRAY	HY7433665129

COPYRIGHT AND CONFIDENTIAL
The Information on this document is the property of BHARAT HEAVY ELECTRICALS LIMITED.
It must not be used directly or indirectly in any way detrimental to the interest of the company.

RESTRICTED USE

TYPICAL ARRANGEMENT FOR CABLE TRAY COVER ALONG WITH ACCESSORIES FOR PERFORATED TYPE CABLE TRAYS

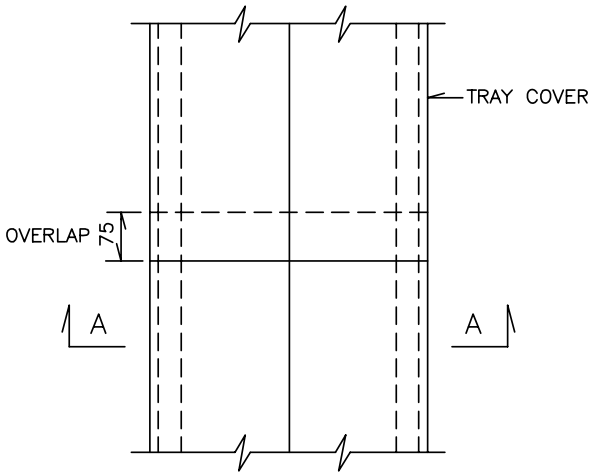

PLAN

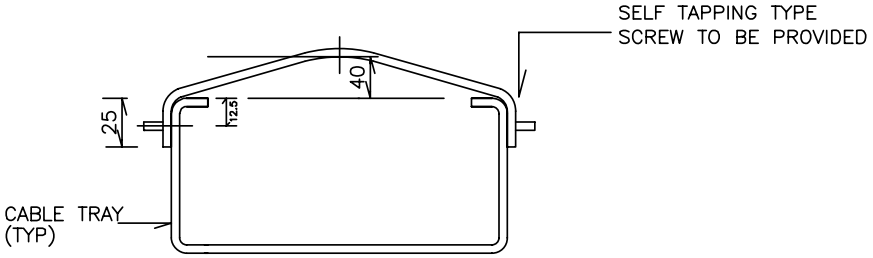

SECTION 'A–A'

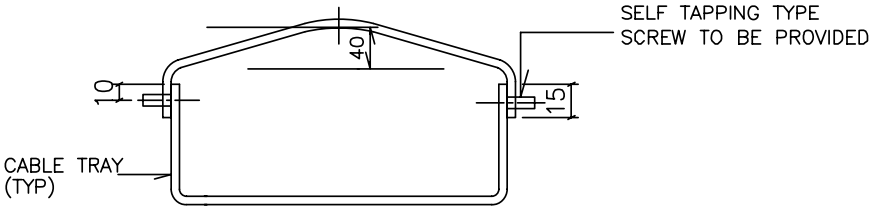

SECTION 'A–A' FOR 50mm TRAY

NOTES

1. CABLE TRAY COVER SHALL INCLUDE 1 No OF TRAY COVER OF 2500 mm LONG FIXED TO CABLE TRAY BY 6ø SS SELF TAPPING SCREWS AT AN INTERVAL OF 600MM.
2. ALL DIMENSIONS ARE IN mm. NEGATIVE TOLERANCE ON THICKNESS OF CABLE TRAY & ACCESSORIES ARE NOT ACCEPTABLE. HOWEVER TOLERANCE OF ±1% IS ACCEPTABLE IN LENGTH & WIDTH OF CABLE TRAY & ACCESSORIES.
3. ALL THE ACCESSORIES EXCEPT NUTS AND BOLTS SHALL BE FABRICATED FROM 2mm THICK HOT ROLLED SHEET STEEL. HOT DIP GALVANISING SHALL BE DONE AFTER FABRICATION AS PER RELAVANT IS STANDARDS. THE AMOUNT OF GALVANISING SHALL BE MIN. 610 g/m2.
4. MATERIAL CODES FOR CABLE TRAY COVERS WITH ACCESSORIES FOR VARIOUS TYPE OF PERFORATED TYPE CABLE TRAYS, ARE GIVEN IN THE FOLLOWING PAGE.
5. THE DETAILS SHOWN IN THE DRAWING ARE TYPICAL FOR PERFORATED TYPE CABLE TRAYS.

COPYRIGHT AND CONFIDENTIAL
The Information on this document is the property of BHARAT HEAVY ELECTRICALS LIMITED.
It must not be used directly or indirectly in any way detrimental to the interest of the company.

RESTRICTED USE

Nov Thu 12 13:00 2020
This Drawing is printed from ... tem (EDAS).
Therefore signatures are not essentially required.

MATERIAL CODES FOR TRAY COVERS ALONG WITH ACCESSORIES FOR PERFORATED TYPE CABLE TRAYS

VAR NO	DESCRIPTION	MATERIAL CODE
13	COVER ALONG WITH ACCESSORIES FOR 750 mm WIDTH PERFORATD TYPE CABLE TRAY	HY7433665137
14	COVER ALONG WITH ACCESSORIES FOR 600 mm WIDTH PERFORATD TYPE CABLE TRAY	HY7433665145
15	COVER ALONG WITH ACCESSORIES FOR 450 mm WIDTH PERFORATD TYPE CABLE TRAY	HY7433665153
16	COVER ALONG WITH ACCESSORIES FOR 300 mm WIDTH PERFORATD TYPE CABLE TRAY	HY7433665161
17	COVER ALONG WITH ACCESSORIES FOR 150 mm WIDTH PERFORATD TYPE CABLE TRAY	HY7433665170
18	COVER ALONG WITH ACCESSORIES FOR 50 mm WIDTH PERFORATD TYPE CABLE TRAY	HY7433665188

COPYRIGHT AND CONFIDENTIAL
The Information on this document is the property of BHARAT HEAVY ELECTRICALS LIMITED.
It must not be used directly or indirectly in any way detrimental to the interest of the company.

RESTRICTED USE

Nov Thu 12 13:00 2020
This Drawing is printed from ... n (EDAS).
Therefore signatures are not essentially required.

TYPICAL ARRANGEMENT FOR HORIZONTAL TEE ALONG WITH ACCESSORIES AND COUPLER PLATES FOR PERFORATED TYPE CABLE TRAYS

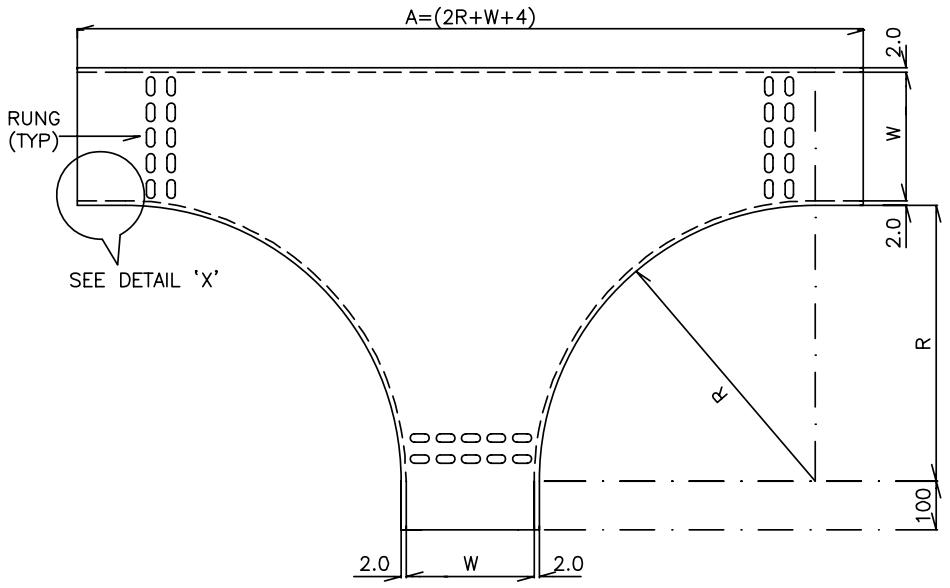

DIMENTIONAL DETAILS:

WIDTH OF TRAY (W)	HEIGHT OF TRAY (H)	A=(2R+W+4)					
		R=150	R=450	R=600	R=900	R=1250	R=1500
50	25	354	NA	NA	NA	NA	NA
150	75	NA	1054	1354	NA	NA	NA
300	75	NA	NA	1504	2104	NA	NA
450	100	NA	NA	1654	2254	NA	NA
600	100	NA	NA	NA	2404	3104	3604
750	100	NA	NA	NA	2554	3254	3754

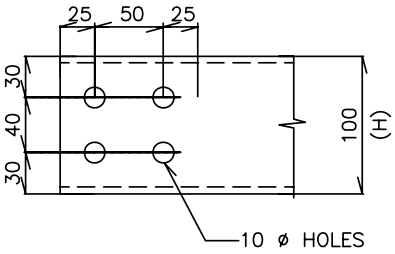

DETAIL–X

NOTES

1. HORIZONTAL "TEE" FOR PERFORATED TYPE CABLE TRAY, SHALL INCLUDE 4 SETS OF COUPLER PLATES ALONG WITH ACCESSORIES LIKE NUTS, BOLTS AND WASHERS AS SHOWN IN THE DRAWING.
2. ALL DIMENSIONS ARE IN mm. NEGATIVE TOLERANCE ON THICKNESS OF CABLE TRAY & ACCESSORIES ARE NOT ACCEPTABLE. HOWEVER TOLERANCE OF ±1% IS ACCEPTABLE IN LENGTH & WIDTH OF CABLE TRAY & ACCESSORIES.
3. MATERIAL CODES FOR HORIZONTAL TEE WITH ACCESSORIES FOR VARIOUS TYPE OF PERFORATED CABLE TRAYS, ARE GIVEN IN THE FOLLOWING PAGE.
4. THE DETAILS SHOWN IN THE DRAWING ARE TYPICAL FOR PERFORATED TYPE CABLE TRAYS.

COPYRIGHT AND CONFIDENTIAL
The Information on this document is the property of BHARAT HEAVY ELECTRICALS LIMITED.
It must not be used directly or indirectly in any way detrimental to the interest of the company.

RESTRICTED USE

Nov Thu 12 13:00 2020
This Drawing is printed from tem (EDAS).
Therefore signatures are not essentially required.

MATERIAL CODES FOR HORIZONTAL ''TEE'' ALONG WITH ACCESSORIES AND COUPLER PLATES FOR PERFORATED TYPE CABLE TRAYS

VAR NO	DESCRIPTION	MATERIAL CODE
19	HORIZONTAL 'TEE' OF 150mm BENDING RADIUS ALONG WITH COUPLER PLATES FOR 50 mm WIDTH PERFORATED TYPE CABLE TRAY	HY7433665196
20	HORIZONTAL 'TEE' OF 450 mm BENDING RADIUS ALONG WITH COUPLER PLATES FOR 150 mm WIDTH PERFORATED TYPE CABLE TRAY	HY7433665200
21	HORIZONTAL 'TEE' OF 600 mm BENDING RADIUS ALONG WITH COUPLER PLATES FOR 150 mm WIDTH PERFORATED TYPE CABLE TRAY	HY7433665218
22	HORIZONTAL 'TEE' OF 600 mm BENDING RADIUS ALONG WITH COUPLER PLATES FOR 300 mm WIDTH PERFORATED TYPE CABLE TRAY	HY7433665226
23	HORIZONTAL 'TEE' OF 900 mm BENDING RADIUS ALONG WITH COUPLER PLATES FOR 300 mm WIDTH PERFORATED TYPE CABLE TRAY	HY7433665234
24	HORIZONTAL 'TEE' OF 900 mm BENDING RADIUS ALONG WITH COUPLER PLATES FOR 450 mm WIDTH PERFORATED TYPE CABLE TRAY	HY7433665242
25	HORIZONTAL 'TEE' OF 600 mm BENDING RADIUS ALONG WITH COUPLER PALTES FOR 450 mm WIDTH PERFORATED TYPE CABLE TRAY	HY7433665250
26	HORIZONTAL 'TEE' OF 900 mm BENDING RADIUS ALONG WITH COUPLER PALTES FOR 600 mm WIDTH PERFORATED TYPE CABLE TRAY	HY7433665269
27	HORIZONTAL 'TEE' OF 1250 mm BENDING RADIUS ALONG WITH COUPLER PLATES FOR 600 mm WIDTH PERFORATED TYPE CABLE TRAY	HY7433665277
28	HORIZONTAL 'TEE' OF 1500 mm BENDING RADIUS ALONG WITH COUPLER PLATES FOR 600 mm WIDTH PERFORATED TYPE CABLE TRAY	HY7433665285
29	HORIZONTAL 'TEE' OF 900 mm BENDING RADIUS ALONG WITH COUPLER PLATES FOR 750 mm WIDTH PERFORATED TYPE CABLE TRAY	HY7433665293
30	HORIZONTAL 'TEE' OF 1250 mm BENDING RADIUS ALONG WITH COUPLER PALTES FOR 750 mm WIDTH PERFORATED TYPE CABLE TRAY	HY7433665307
31	HORIZONTAL 'TEE' OF 1500 mm BENDING RADIUS ALONG WITH COUPLER PLATES FOR 750 mm WIDTH PERFORATED TYPE CABLE TRAY	HY7433665315

COPYRIGHT AND CONFIDENTIAL
The Information on this document is the property of BHARAT HEAVY ELECTRICALS LIMITED.
It must not be used directly or indirectly in any way detrimental to the interest of the company.

RESTRICTED USE

Nov Thu 12 13:00 2020
This Drawing is printed from EDAS (EDAS).
Therefore signatures are not essentially required.

TYPICAL ARRANGEMENT FOR HORIZONTAL ELBOW 90° ALONG WITH ACCESSORIES AND COUPLER PLATES FOR PERFORATED TYPE CABLE TRAYS

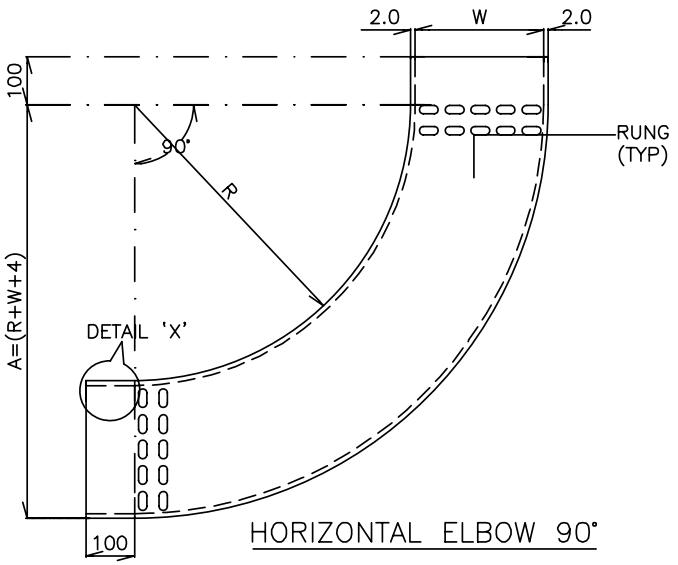

HORIZONTAL ELBOW 90°

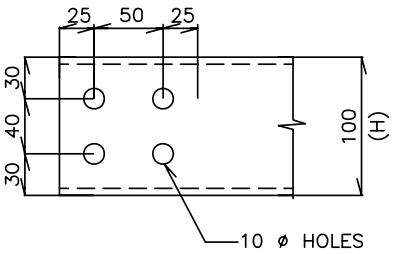

DETAIL–X

DIMENTIONAL DETAILS:

WIDTH OF TRAY (W)	HEIGHT OF TRAY (H)	A=(R+W+4)					
		R=150	R=450	R=600	R=900	R=1250	R=1500
50	25	204	NA	NA	NA	NA	NA
150	75	NA	604	754	NA	NA	NA
300	75	NA	NA	904	1204	NA	NA
450	100	NA	NA	1054	1354	NA	NA
600	100	NA	NA	NA	1504	1854	2104
750	100	NA	NA	NA	1654	2004	2254

NOTES

1. HORIZONTAL 90° ELBOW FOR PERFORATED TYPE CABLE TRAY, SHALL INCLUDE 2 SETS OF COUPLER PLATES ALONG PLATES ALONG WITH ACCESSORIES LIKE NUTS, BOLTS AND WASHERS AS SHOWN IN THE DRAWING.
2. ALL DIMENSIONS ARE IN mm. NEGATIVE TOLERANCE ON THICKNESS OF CABLE TRAY & ACCESSORIES ARE NOT ACCEPTABLE. HOWEVER TOLERANCE OF ±1% IS ACCEPTABLE IN LENGTH & WIDTH OF CABLE TRAY & ACCESSORIES.
3. MATERIAL CODES FOR HORIZONTAL ELBOW 90° WITH ACCESSORIES FOR VARIOUS TYPE OF PERFORATED TYPE CABLE TRAYS, ARE GIVEN IN THE FOLLOWING PAGE.
4. THE DETAILS SHOWN IN THE DRAWING ARE TYPICAL FOR PERFORATED TYPE CABLE TRAYS.

COPYRIGHT AND CONFIDENTIAL
The Information on this document is the property of BHARAT HEAVY ELECTRICALS LIMITED.
It must not be used directly or indirectly in any way detrimental to the interest of the company.

RESTRICTED USE

Nov Thu 12 13:00 2020
This Drawing is printed from tem (EDAS).
Therefore signatures are not essentially required.

MATERIAL CODES FOR 90° HORIZONTAL ELOW 90° ALONG WITH ACCESSORIES AND COUPLER PLATES FORPERFORATED TYPE CABLE TRAYS

VAR NO	DESCRIPTION	MATERIAL CODE
32	HORIZONTAL BEND OF 150 mm BENDING RADIUS ALONG WITH COUPLER PLATES FOR 50 mm WIDTH PERFORATED TYPE CABLE TRAY	HY7433665323
33	HORIZONTAL BEND OF 450 mm BENDING RADIUS ALONG WITH COUPLER PLATES FOR 150 mm WIDTH PERFORATED TYPE CABLE TRAY	HY7433665331
34	HORIZONTAL BEND OF 600 mm BENDING RADIUS ALONG WITH COUPLER PLATES FOR 150 mm WIDTH PERFORATED TYPE CABLE TRAY	HY7433665340
35	HORIZONTAL BEND OF 600 mm BENDING RADIUS ALONG WITH COUPLER PLATES FOR 300 mm WIDTH PERFORATED TYPE CABLE TRAY	HY7433665358
36	HORIZONTAL BEND OF 900 mm BENDING RADIUS ALONG WITH COUPLER PLATES FOR 300 mm WIDTH PERFORATED TYPE CABLE TRAY	HY7433665366
37	HORIZONTAL BEND OF 600 mm BENDING RADIUS ALONG WITH COUPLER PLATES FOR 450 mm WIDTH PERFORATED TYPE CABLE TRAY	HY7433665374
38	HORIZONTAL BEND OF 900 mm BENDING RADIUS ALONG WITH COUPLER PLATES FOR 450 mm WIDTH PERFORATED TYPE CABLE TRAY	HY7433665382
39	HORIZONTAL BEND OF 900 mm BENDING RADIUS ALONG WITH COUPLER PLATES FOR 600 mm WIDTH PERFORATED TYPE CABLE TRAY	HY7433665390
40	HORIZONTAL BEND OF 1250 mm BENDING RADIUS ALONG WITH COUPLER PLATES FOR 600 mm WIDTH PERFORATED TYPE CABLE TRAY	HY7433665404
41	HORIZONTAL BEND OF 1500 mm BENDING RADIUS ALONG WITH COUPLER PLATES FOR 600 mm WIDTH PERFORATED TYPE CABLE TRAY	HY7433665412
42	HORIZONTAL BEND OF 900 mm BENDING RADIUS ALONG WITH COUPLER PLATES FOR 750 mm WIDTH PERFORATED TYPE CABLE TRAY	HY7433665420
43	HORIZONTAL BEND OF 1250 mm BENDING RADIUS ALONG WITH COUPLER PLATES FOR 750 mm WIDTH PERFORATED TYPE CABLE TRAY	HY7433665439
44	HORIZONTAL BEND OF 1500 mm BENDING RADIUS ALONG WITH COUPLER PLATES FOR 750 mm WIDTH PERFORATED TYPE CABLE TRAY	HY7433665447

COPYRIGHT AND CONFIDENTIAL
The Information on this document is the property of BHARAT HEAVY ELECTRICALS LIMITED.
It must not be used directly or indirectly in any way detrimental to the interest of the company.

RESTRICTED USE

Nov Thu 12 13:00 2020
This Drawing is printed from Enterprise Data Access System (EDAS).
Therefore signatures are not essentially required.

TYPICAL ARRANGEMENT FOR VERTICAL ELBOW 90° UP/DOWN WITH ACCESSORIES AND COUPLER PLATES FOR PERFORATED TYPE CABLE TRAYS

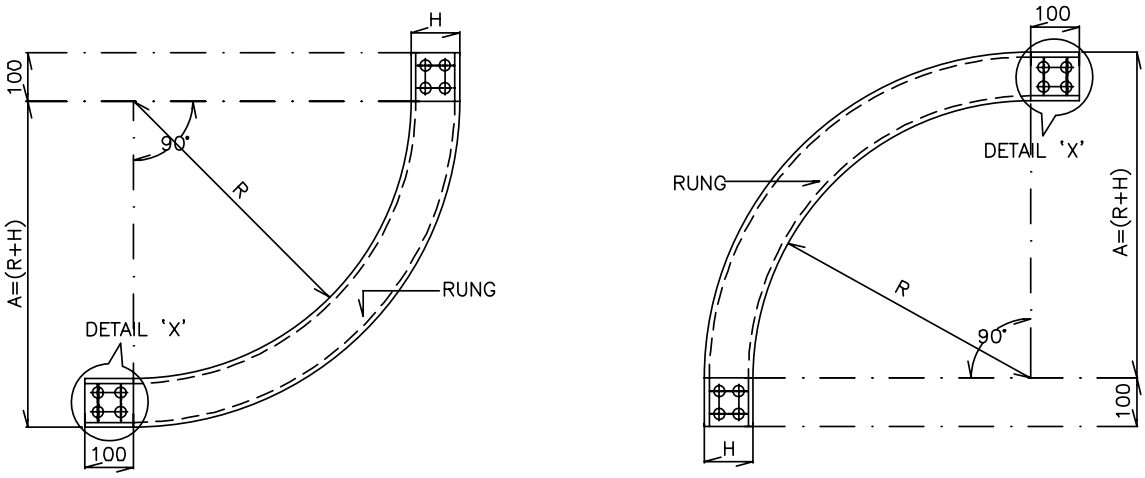

VERTICAL ELBOW 90° UP / DOWN

DIMENTIONAL DETAILS:

WIDTH OF TRAY (W)	HEIGHT OF TRAY (H)	A=(R+H)					
		R=150	R=450	R=600	R=900	R=1250	R=1500
50	25	175	NA	NA	NA	NA	NA
150	75	NA	525	675	NA	NA	NA
300	75	NA	NA	675	975	NA	NA
450	100	NA	NA	700	1000	NA	NA
600	100	NA	NA	NA	1000	1350	1600
750	100	NA	NA	NA	1000	1350	1600

NOTES

1. VERTICAL ELBOW 90° UP/DOWN FOR PERFORATED TYPE CABLE TRAY, SHALL INCLUDE 2 SETS OF COUPLER PLATES ALONG WITH ACCESSORIES LIKE WASHERS, NUTS AND BOLTS AS SHOWN IN THE DRAWING.
2. ALL DIMENSIONS ARE IN mm. NEGATIVE TOLERANCE ON THICKNESS OF CABLE TRAY & ACCESSORIES ARE NOT ACCEPTABLE. HOWEVER TOLERANCE OF ±1% IS ACCEPTABLE IN LENGTH & WIDTH OF CABLE TRAY & ACCESSORIES.
3. MATERIAL CODES FOR VERTICAL ELBOW 90° UP/DOWN WITH ACCESSORIES FOR VARIOUS TYPE OF PERFORATED TYPE CABLE TRAYS, ARE GIVEN IN THE FOLLOWING PAGE.
4. THE DETAILS SHOWN IN THE DRAWING ARE TYPICAL FOR PERFORATED TYPE CABLE TRAYS.

COPYRIGHT AND CONFIDENTIAL
The Information on this document is the property of BHARAT HEAVY ELECTRICALS LIMITED.
It must not be used directly or indirectly in any way detrimental to the interest of the company.

RESTRICTED USE

Nov Thu 12 13:00 2020
This Drawing is printed from ... (EDAS).
Therefore signatures are not essentially required.

MATERIAL CODES FOR 90° VERTICAL UP/DOWN ALONG WITH ACCESSORIES AND COUPLER PLATES FOR PERFORATED TYPE CABLE TRAYS

VAR NO	DESCRIPTION	MATERIAL CODE
45	VERTICAL UP OF 150 mm BENDING RADIUS ALONG WITH COUPLER PLATES FOR 50 mm WIDTH PERFORATED TYPE CABLE TRAY	HY7433665455
46	VERTICAL DOWN OF 450 mm BENDING RADIUS ALONG WITH COUPLER PLATES FOR 150 mm WIDTH PERFORATED TYPE CABLE TRAY	HY7433665463
47	VERTICAL UP OF 450 mm BENDING RADIUS ALONG WITH COUPLER PLATES FOR 150 mm WIDTH PERFORATED TYPE CABLE TRAY	HY7433665471
48	VERTICAL DOWN OF 450 mm BENDING RADIUS ALONG WITH COUPLER PLATES FOR 150 mm WIDTH PERFORATED TYPE CABLE TRAY	HY7433665480
49	VERTICAL UP OF 600 mm BENDING RADIUS ALONG WITH COUPLER PLATES FOR 150 mm WIDTH PERFORATED TYPE CABLE TRAY	HY7433665498
50	VERTICAL DOWN OF 600 mm BENDING RADIUS ALONG WITH COUPLER PLATES FOR 150 mm WIDTH PERFORATED TYPE CABLE TRAY	HY7433665501
51	VERTICAL UP OF 600 mm BENDING RADIUS ALONG WITH COUPLER PLATES FOR 300 mm WIDTH PERFORATED TYPE CABLE TRAY	HY7433665510
52	VERTICAL DOWN OF 600 mm BENDING RADIUS ALONG WITH COUPLER PLATES FOR 300 mm WIDTH PERFORATED TYPE CABLE TRAY	HY7433665528
53	VERTICAL UP OF 900 mm BENDING RADIUS ALONG WITH COUPLER PLATES FOR 300 mm WIDTH PERFORATED TYPE CABLE TRAY	HY7433665536
54	VERTICAL DOWN OF 900 mm BENDING RADIUS ALONG WITH COUPLER PLATES FOR 300 mm WIDTH PERFORATED TYPE CABLE TRAY	HY7433665544
55	VERTICAL UP OF 600 mm BENDING RADIUS ALONG WITH COUPLER PLATES FOR 450 mm WIDTH PERFORATED TYPE CABLE TRAY	HY7433665552
56	VERTICAL DOWN OF 600 mm BENDING RADIUS ALONG WITH COUPLER PLATES FOR 450 mm WIDTH PERFORATED TYPE CABLE TRAY	HY7433665560
57	VERTICAL UP OF 900 mm BENDING RADIUS ALONG WITH COUPLER PLATES FOR 450 mm WIDTH PERFORATED TYPE CABLE TRAY	HY7433665579
58	VERTICAL DOWN OF 900 mm BENDING RADIUS ALONG WITH COUPLER PLATES FOR 450 mm WIDTH PERFORATED TYPE CABLE TRAY	HY7433665587

COPYRIGHT AND CONFIDENTIAL
The Information on this document is the property of BHARAT HEAVY ELECTRICALS LIMITED.
It must not be used directly or indirectly in any way detrimental to the interest of the company.

RESTRICTED USE

Nov Thu 12 13:00 2020
This Drawing is printed from EDAS (EDAS).
Therefore signatures are not essentially required.

MATERIAL CODES FOR 90° VERTICAL UP/DOWN ALONG WITH ACCESSORIES AND COUPLER PLATES FOR PERFORATED TYPE CABLE TRAYS

VAR NO	DESCRIPTION	MATERIAL CODE
59	VERTICAL UP OF 900 mm BENDING RADIUS ALONG WITH COUPLER PLATES FOR 600 mm WIDTH PERFORATED TYPE CABLE TRAY	HY7433665595
60	VERTICAL DOWN OF 900 mm BENDING RADIUS ALONG WITH COUPLER PLATES FOR 600 mm WIDTH PERFORATED TYPE CABLE TRAY	HY7433665609
61	VERTICAL UP OF 1250 mm BENDING RADIUS ALONG WITH COUPLER PLATES FOR 600 mm WIDTH PERFORATED TYPE CABLE TRAY	HY7433665617
62	VERTICAL DOWN OF 1250 mm BENDING RADIUS ALONG WITH COUPLER PLATES FOR 600 mm WIDTH PERFORATED TYPE CABLE TRAY	HY7433665625
63	VERTICAL UP OF 1500 mm BENDING RADIUS ALONG WITH COUPLER PLATES FOR 600 mm WIDTH PERFORATED TYPE CABLE TRAY	HY7433665633
64	VERTICAL DOWN OF 1500 mm BENDING RADIUS ALONG WITH COUPLER PLATES FOR 600 mm WIDTH PERFORATED TYPE CABLE TRAY	HY7433665641
65	VERTICAL UP OF 900 mm BENDING RADIUS ALONG WITH COUPLER PLATES FOR 750 mm WIDTH PERFORATED TYPE CABLE TRAY	HY7433665650
66	VERTICAL DOWN OF 900mm BENDING RADIUS ALONG WITH COUPLER PLATES FOR 750 mm WIDTH PERFORATED TYPE CABLE TRAY	HY7433665668
67	VERTICAL UP OF 1250 mm BENDING RADIUS ALONG WITH COUPLER PLATES FOR 750 mm WIDTH PERFORATED TYPE CABLE TRAY	HY7433665676
68	VERTICAL DOWN OF 1250 mm BENDING RADIUS ALONG WITH COUPLER PLATES FOR 750 mm WIDTH PERFORATED TYPE CABLE TRAY	HY7433665684
69	VERTICAL UP OF 1500 mm BENDING RADIUS ALONG WITH COUPLER PLATES FOR 750 mm WIDTH PERFORATED TYPE CABLE TRAY	HY7433665692
70	VERTICAL DOWN OF 1500 mm BENDING RADIUS ALONG WITH COUPLER PLATES FOR 750 mm WIDTH PERFORATED TYPE CABLE TRAY	HY7433665706

COPYRIGHT AND CONFIDENTIAL
The Information on this document is the property of BHARAT HEAVY ELECTRICALS LIMITED.
It must not be used directly or indirectly in any way detrimental to the interest of the company.

RESTRICTED USE

Nov Thu 12 13:00 2020
This Drawing is printed from ... tem (EDAS).
Therefore signatures are not essentially required.

TYPICAL ARRANGEMENT FOR REDUCERS ALONG WITH ACCESSORIES AND COUPLER PLATES FOR PERFORATED TYPE CABLE TRAYS

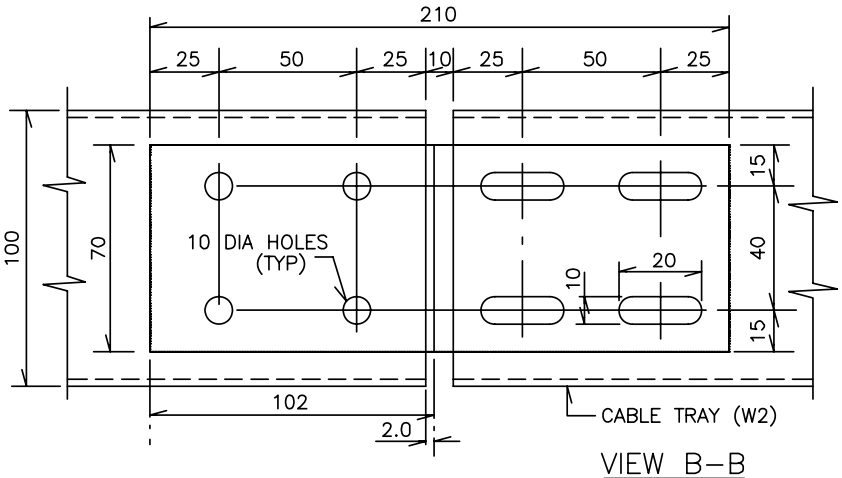

VIEW B–B

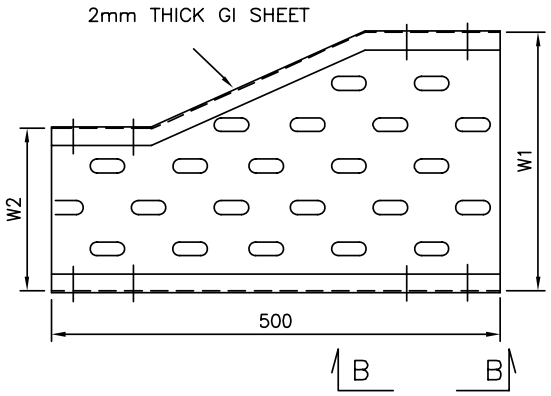

RIGHT HAND REDUCER–PLAN

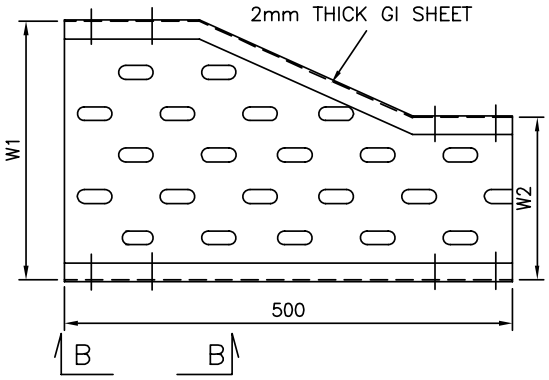

LEFT HAND REDUCER–PLAN

H=100mm for 450/600/750mm width Tray
H=75mm for 150/300mm width Tray
H=25mm for 50mm width Tray

NOTES

1. REDUCER FOR PERFORATED TYPE CABLE TRAY TYPE, SHALL INCLUDE 1 SET OF COUPLER PLATES ALONG WITH ACCESSORIES LIKE NUTS, BOLTS AND WASHERS AS SHOWN IN THE DRAWING.
2. ALL DIMENSIONS ARE IN mm. NEGATIVE TOLERANCE ON THICKNESS OF CABLE TRAY & ACCESSORIES ARE NOT ACCEPTABLE. HOWEVER TOLERANCE OF ±1% IS ACCEPTABLE IN LENGTH & WIDTH OF CABLE TRAY & ACCESSORIES.
3. MATERIAL CODES FOR REDUCERS WITH ACCESSORIES FOR VARIOUS TYPE OF PERFORATED TYPE CABLE TRAYS, ARE GIVEN IN THE FOLLOWING PAGE.
4. THE DETAILS SHOWN IN THE DRAWING ARE TYPICAL FOR PERFORATED TYPE CABLE TRAYS.

COPYRIGHT AND CONFIDENTIAL
The Information on this document is the property of BHARAT HEAVY ELECTRICALS LIMITED.
It must not be used directly or indirectly in any way detrimental to the interest of the company.

RESTRICTED USE

Nov Thu 12 13:00 2020
This Drawing is printed from ... tem (EDAS).
Therefore signatures are not essentially required.

MATERIAL CODES FOR CABLE TRAY REDUCERS ALONG WITH ACCESSORIES AND COUPLER PLATES FOR PERFORATED TYPE CABLE TRAYS

VAR NO	DESCRIPTION	MATERIAL CODE
71	750 mm TO 600 mm RIGHT HAND REDUCER ALONG WITH COUPLER PLATES FOR PERFORATED TYPE CABLE TRAYS	HY7433665714
72	750 mm TO 600 mm LEFT HAND REDUCER ALONG WITH COUPLER PLATES FOR PERFORATED TYPE CABLE TRAYS	HY7433665722
73	750 mm TO 450 mm RIGHT HAND REDUCER ALONG WITH COUPLER PLATES FOR PERFORATED TYPE CABLE TRAYS	HY7433665730
74	750 mm TO 450 mm LEFT HAND REDUCER ALONG WITH COUPLER PLATES FOR PERFORATED TYPE CABLE TRAYS	HY7433665749
75	600 mm TO 450 mm RIGHT HAND REDUCER ALONG WITH COUPLER PLATES FOR PERFORATED TYPE CABLE TRAYS	HY7433665757
76	600 mm TO 450 mm LEFT HAND REDUCER ALONG WITH COUPLER PLATES FOR PERFORATED TYPE CABLE TRAYS	HY7433665765
77	600 mm TO 300 mm RIGHT HAND REDUCER ALONG WITH COUPLER PLATES FOR PERFORATED TYPE CABLE TRAYS	HY7433665773
78	600 mm TO 300 mm LEFT HAND REDUCER ALONG WITH COUPLER PLATES FOR PERFORATED TYPE CABLE TRAYS	HY7433665781
79	450 mm TO 300 mm RIGHT HAND REDUCER ALONG WITH COUPLER PLATES FOR PERFORATED TYPE CABLE TRAYS	HY7433665790
80	450 mm TO 300 mm LEFT HAND REDUCER ALONG WITH COUPLER PLATES FOR PERFORATED TYPE CABLE TRAYS	HY7433665803
81	450 mm TO 150 mm RIGHT HAND REDUCER ALONG WITH COUPLER PLATES FOR PERFORATED TYPE CABLE TRAYS	HY7433665811
82	450 mm TO 150 mm LEFT HAND REDUCER ALONG WITH COUPLER PLATES FOR PERFORATED TYPE CABLE TRAYS	HY7433665820
83	300 mm TO 150 mm RIGHT HAND REDUCER ALONG WITH COUPLER PLATES FOR PERFORATED TYPE CABLE TRAYS	HY7433665838
84	300 mm TO 150 mm LEFT HAND REDUCER ALONG WITH COUPLER PLATES FOR PERFORATED TYPE CABLE TRAYS	HY7433665846
85	150 mm TO 50 mm RIGHT HAND REDUCER ALONG WITH COUPLER PLATES FOR PERFORATED TYPE CABLE TRAYS	HY7433665854
86	150 mm TO 50 mm LEFT HAND REDUCER ALONG WITH COUPLER PLATES FOR PERFORATED TYPE CABLE TRAYS	HY7433665862

COPYRIGHT AND CONFIDENTIAL
The Information on this document is the property of BHARAT HEAVY ELECTRICALS LIMITED.
It must not be used directly or indirectly in any way detrimental to the interest of the company.

RESTRICTED USE

Nov Thu 12 13:00 2020
This Drawing is printed from the EDAS system (EDAS).
Therefore signatures are not essentially required.

TYPICAL ARRANGEMENT FOR CROSS CABLE ALONG WITH ACCESSORIES AND COUPLER PLATES FOR PERFORATED TYPE CABLE TRAYS

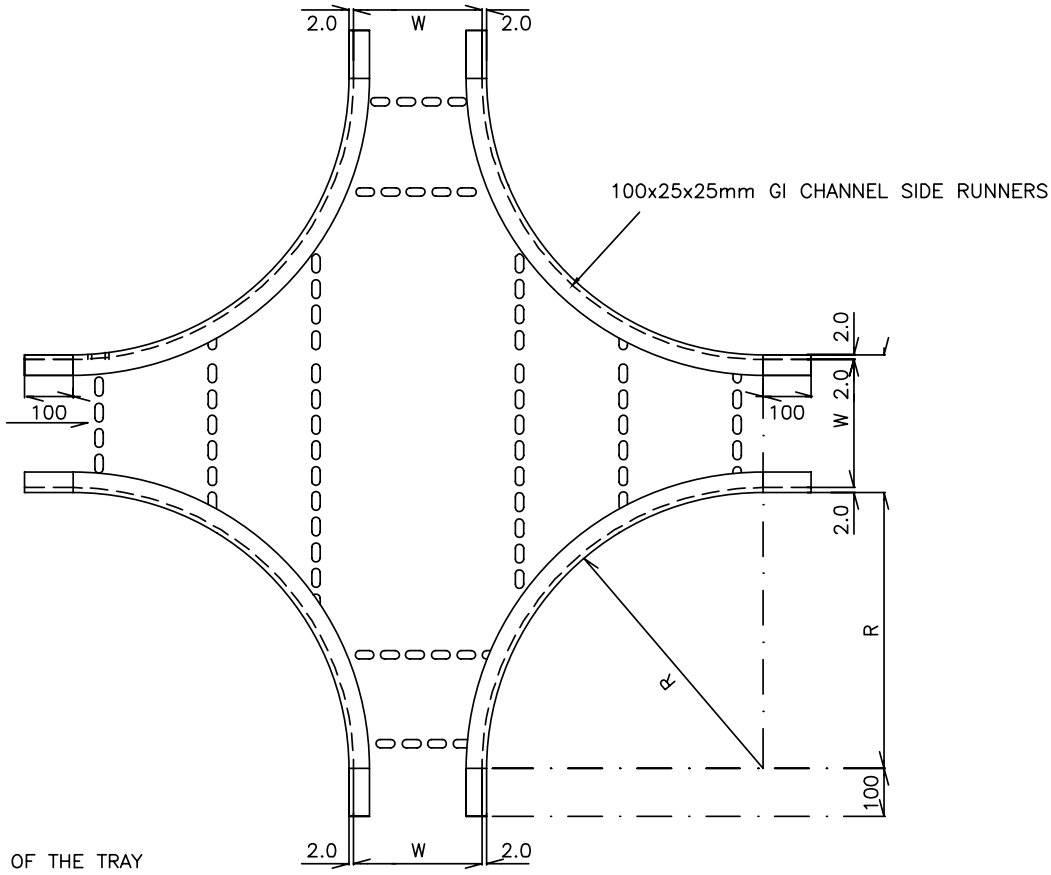

W—INSIDE WIDTH OF THE TRAY

R—BENDING RADIUS OF THE TRAY

NOTES

1. CROSS FOR PERFORATED TYPE CABLE TRAY, SHALL INCLUDE 4 SETS OF COUPLER PLATES ALONG WITH ACCESSORIES LIKE NUTS, BOLTS AND WASHERS, AS SHOWN IN THE DRAWING.
2. ALL DIMENSIONS ARE IN mm. NEGATIVE TOLERANCE ON THICKNESS OF CABLE TRAY & ACCESSORIES ARE NOT ACCEPTABLE. HOWEVER TOLERANCE OF ±1% IS ACCEPTABLE IN LENGTH & WIDTH OF CABLE TRAY & ACCESSORIES.
3. MATERIAL CODES FOR CROSSES WITH ACCESSORIES FOR VARIOUS TYPE OF PERFORATED TYPE CABLE TRAY, ARE GIVEN IN THE FOLLOWING PAGE.
4. THE DETAILS SHOWN IN THE DRAWING ARE TYPICAL CROSS FOR PERFORATED TYPE CABLE TRAYS.

COPYRIGHT AND CONFIDENTIAL
The Information on this document is the property of BHARAT HEAVY ELECTRICALS LIMITED.
It must not be used directly or indirectly in any way detrimental to the interest of the company.

RESTRICTED USE

Nov Thu 12 13:00 2020
This Drawing is printed from tem (EDAS).
Therefore signatures are not essentially required.

SPECIFICATION NO. HY7433665

MATERIAL CODES FOR CROSS CABLE ALONG WITH ACCESSORIES AND COUPLER PLATES FOR PERFORATED TYPE CABLE TRAYS

VAR NO	DESCRIPTION	MATERIAL CODE
87	HORIZONTAL CROSS OF 150 mm BENDING RADIUS ALONG COUPLER PLATES FOR 50 mm WIDTH PERFORATED TYPE CABLE TRAY	HY7433665870
88	HORIZONTAL CROSS OF 450 mm BENDING RADIUS ALONG COUPLER PLATES FOR 150 mm WIDTH PERFORATED TYPE CABLE TRAY	HY7433665889
89	HORIZONTAL CROSS OF 600 mm BENDING RADIUS ALONG COUPLER PLATES FOR 150 mm WIDTH PERFORATED TYPE CABLE TRAY	HY7433665897
90	HORIZONTAL CROSS OF 600 mm BENDING RADIUS ALONG COUPLER PLATES FOR 300 mm WIDTH PERFORATED TYPE CABLE TRAY	HY7433665900
91	HORIZONTAL CROSS OF 900 mm BENDING RADIUS ALONG COUPLER PLATES FOR 300 mm WIDTH PERFORATED TYPE CABLE TRAY	HY7433665919
92	HORIZONTAL CROSS OF 600 mm BENDING RADIUS ALONG COUPLER PLATES FOR 450 mm WIDTH PERFORATED TYPE CABLE TRAY	HY7433665927
93	HORIZONTAL CROSS OF 900 mm BENDING RADIUS ALONG COUPLER PLATES FOR 450 mm WIDTH PERFORATED TYPE CABLE TRAY	HY7433665935
94	HORIZONTAL CROSS OF 900 mm BENDING RADIUS ALONG COUPLER PLATES FOR 600 mm WIDTH PERFORATED TYPE CABLE TRAY	HY7433665943
95	HORIZONTAL CROSS OF 1250 mm BENDING RADIUS ALONG COUPLER PLATES FOR 600 mm WIDTH PERFORATED TYPE CABLE TRAY	HY7433665951
96	HORIZONTAL CROSS OF 1500 mm BENDING RADIUS ALONG COUPLER PLATES FOR 600 mm WIDTH PERFORATED TYPE CABLE TRAY	HY7433665960
97	HORIZONTAL CROSS OF 900 mm BENDING RADIUS ALONG COUPLER PLATES FOR 750 mm WIDTH PERFORATED TYPE CABLE TRAY	HY7433665978
98	HORIZONTAL CROSS OF 1250 mm BENDING RADIUS ALONG COUPLER PLATES FOR 750 mm WIDTH PERFORATED TYPE CABLE TRAY	HY7433665986
99	HORIZONTAL CROSS OF 1500 mm BENDING RADIUS ALONG COUPLER PLATES FOR 750 mm WIDTH PERFORATED TYPE CABLE TRAY	HY7433665994

COPYRIGHT AND CONFIDENTIAL
The Information on this document is the property of BHARAT HEAVY ELECTRICALS LIMITED.
It must not be used directly or indirectly in any way detrimental to the interest of the company.

RESTRICTED USE

Nov Thu 12 13:00 2020
This Drawing is printed from the Electronic Data Management System (EDAS).
Therefore signatures are not essentially required.

GI LADDER TYPE (CHANNEL) CABLE TRAYS AND ACCESSORIES (TYPE-1)

1. This standard shall be read in conjunction with BHEL plant standard no. HY7433661, GI cable trays and accessories.

This standard covers the constructional, dimensional and sectional details of various types of GI ladder type (channel) cable trays and accessories (type-1) and same are given in the following pages.

Copyright and Confidential
The information on this document is the property of BHARAT HEAVY ELECTRICALS LIMITED.
It must not be used directly or indirectly in any way detrimental to the interest of the company.

RESTRICTED USE

Nov Thu 12 13:00 2020
Bidder's Seal & Signature
This Drawing is printed from Engineering Digital Archive System (EDAS).
Therefore signatures are not essentially required.

TYPICAL ARRANGEMENT FOR STRIGHT RUN CABLE TRAY ALONG WITH ACCESSORIES AND COUPLER PLATES FOR LADDER TYPE (CHANNEL) CABLE TRAYS–TYPE1

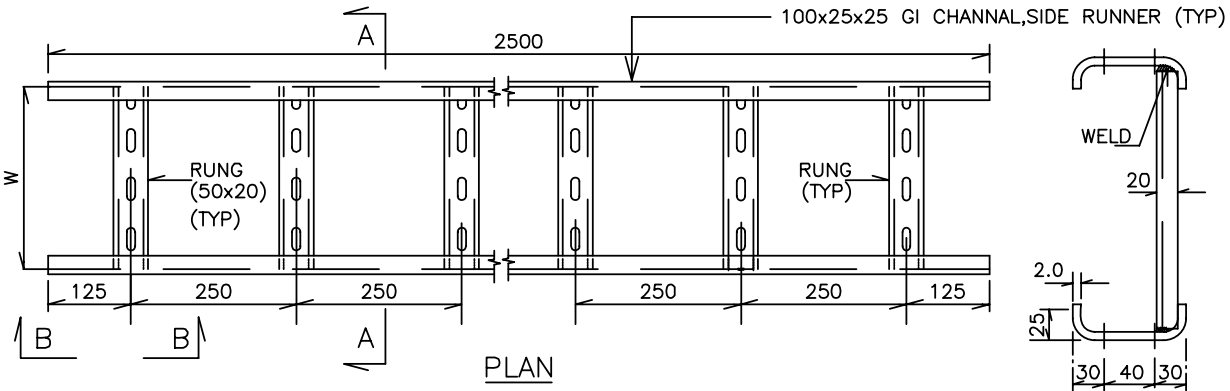

PLAN

INSIDE WIDTH OF TRAY (W)– 750/600/450/300/150 mm

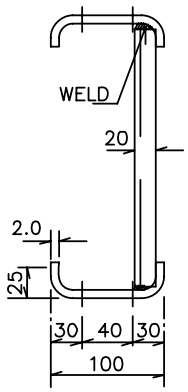

SECTION A–A

H=100mm for 300/450/600/750mm width Tray
H=50mm for 150mm width Tray

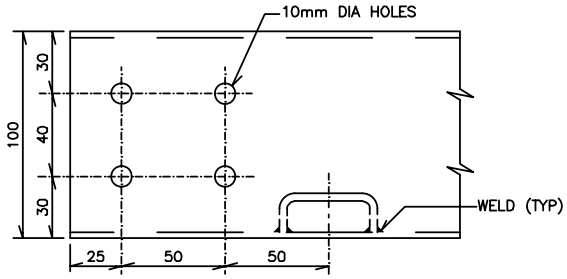

SECTION 'B–B'

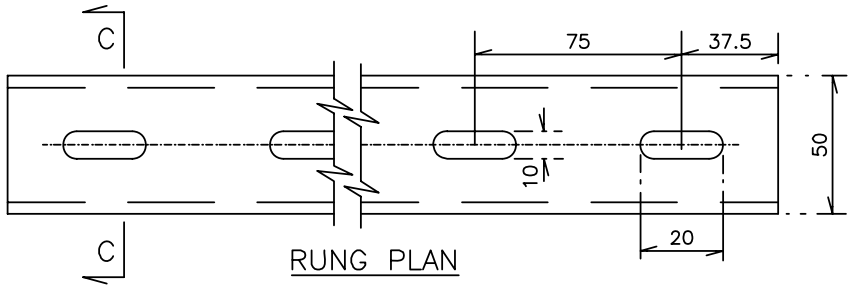

RUNG PLAN

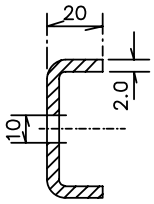

SECTION 'C–C'

NOTEs:

1. STRAIGHT RUN FOR LADDER TYPE (CHANNEL) CABLE TRAY TYPE–1, SHALL INCLUDE 2 Sets OF COUPLER PLATES ALONG WITH ACCESSORIES LIKE WASHERS, NUTS AND BOLTS. DETAILS OF THE SAME IS ATTACHED IN SHEET NO. 4 OF 19.
2. ALL DIMENSIONS ARE IN mm. NEGATIVE TOLERANCE ON THICKNESS OF CABLE TRAY & ACCESSORIES ARE NOT ACCEPTABLE. HOWEVER TOLERANCE OF ±1% IS ACCEPTABLE ON LENGTH AND WIDTH OF CABLE TRAY & ACCESSORIES.
3. MATERIAL CODES FOR VARIOUS LADDER TYPE (CHANNEL) STRAIGHT RUN CABLE TRAY TYPE–1 ARE GIVEN IN THE FOLLOWING PAGE.
4. IN ORDER TO MAINTAIN PROPER EARTH CONTINUITY BOND, PAINTING ON SURFACES IN CONTACT BETWEEN COUPLER PLATES AND CABLE TRAY SHALL BE SCRAPPED AT THE TIME OF INSTALLATION.
5. THE DETAILS SHOWN IN THE DRAWING ARE TYPICAL FOR LADDER TYPE (CHANNEL) CABLE TRAYS.

COPYRIGHT AND CONFIDENTIAL
The Information on this document is the property of BHARAT HEAVY ELECTRICALS LIMITED.
It must not be used directly or indirectly in any way detrimental to the interest of the company.

RESTRICTED USE

Nov Thu 12 13:00 2020
This Drawing is printed from Engineering Digital Archive System (EDAS).
Therefore signatures are not essentially required.

MATERIAL CODES FOR STRAIGHT RUN CABLE TRAY ALONG WITH ACCESSORIES AND COUPLER PLATES FOR LADDER TYPE (CHANNEL) CABLE TRAYS–TYPE1

VAR NO	DESCRIPTION	MATERIAL CODE
01	750 mm WIDTH LADDER TYPE (CHANNEL) STRAIGHT RUN CABLE TRAY ALONG WITH ACCESSORIES INCLUDING COUPLER PLATES–TYPE1	HY7433662014
02	600 mm WIDTH LADDER TYPE (CHANNEL) STRAIGHT RUN CABLE TRAY ALONG WITH ACCESSORIES INCLUDING COUPLER PLATES–TYPE1	HY7433662022
03	450 mm WIDTH LADDER TYPE (CHANNEL) STRAIGHT RUN CABLE TRAY ALONG WITH ACCESSORIES INCLUDING COUPLER PLATES–TYPE1	HY7433662030
04	300 mm WIDTH LADDER TYPE (CHANNEL) STRAIGHT RUN CABLE TRAY ALONG WITH ACCESSORIES INCLUDING COUPLER PLATES–TYPE1	HY7433662049
05	150 mm WIDTH LADDER TYPE (CHANNEL) STRAIGHT RUN CABLE TRAY ALONG WITH ACCESSORIES INCLUDING COUPLER PLATES–TYPE1	HY7433662057

COPYRIGHT AND CONFIDENTIAL
The Information on this document is the property of BHARAT HEAVY ELECTRICALS LIMITED.
It must not be used directly or indirectly in any way detrimental to the interest of the company.

RESTRICTED USE

Nov Thu 12 13:00 2020
This Drawing is printed from Engineering Digital Archive System (EDAS).
Therefore signatures are not essentially required.

TYPICAL ARRANGEMENT FOR COUPLER PLATE SET ALONG WITH ACCESSORIES FOR LADDER TYPE (CHANNEL) CABLE TRAYS–TYPE1

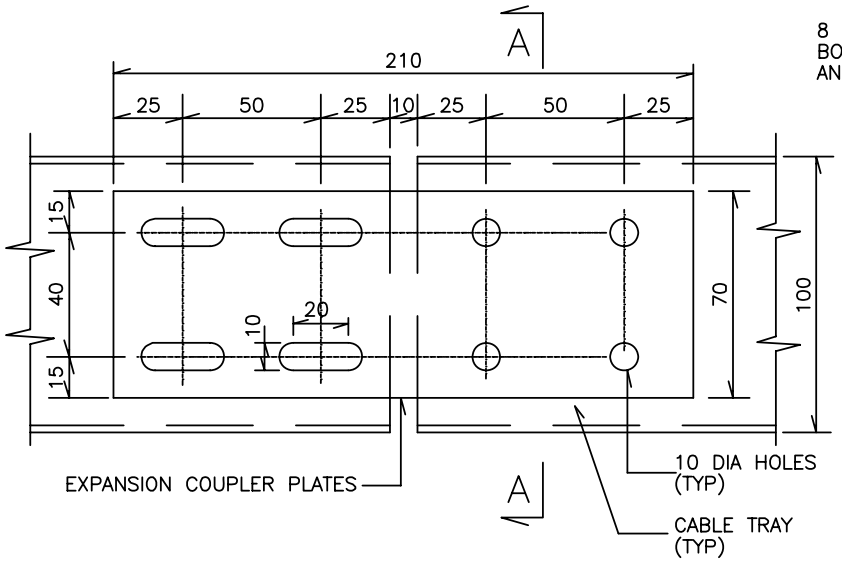

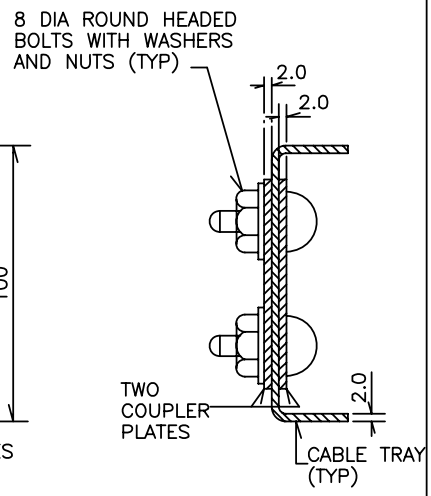

SECTION A–A

NOTES

1. ALL DIMENSIONS ARE IN mm. NEGATIVE TOLERANCE ON THICKNESS OF CABLE TRAY & ACCESSORIES ARE NOT ACCEPTABLE. HOWEVER TOLERANCE OF ±1% IS ACCEPTABLE ON LENGTH AND WIDTH OF CABLE TRAY & ACCESSORIES.
2. IN ORDER TO MAINTAIN PROPER EARTH CONTINUITY BOND, PAINTING ON SURFACES IN CONTACT BETWEEN COUPLER PLATES AND CABLE TRAY SHALL BE SCRAPPED AT THE TIME OF INSTALLATION.
3. TWO COUPLER PLATES TO BE PROVIDED ONE EACH ON EITHER SIDE OF TRAY.
4. ONE SET OF COUPLER PLATE WITH ACCESSORIES SHALL INCLUDE 2 NOs. OF COUPLER PLATES 8 NOs. OF NUTS, BOLTS AND 16 NOs. OF WASHERS.
5. MATERIAL CODES FOR LOOSE SUPPLY OF COUPLER PLATE WITH ACCESSORIES FOR VARIOUS TYPE OF LADDER TYPE (CHANNEL) CABLE TRAYS–TYPE1, ARE GIVEN IN THE FOLLOWING PAGE.
6. BOLTS SHALL BE ROUND NECK TYPE AS INDICATED IN THE DRAWING. HEXAGONAL TYPE BOLTS ARE NOT ACCEPTABLE.

COPYRIGHT AND CONFIDENTIAL
The Information on this document is the property of BHARAT HEAVY ELECTRICALS LIMITED.
It must not be used directly or indirectly in any way detrimental to the interest of the company.

RESTRICTED USE

Nov Thu 12 13:00 2020
This Drawing is printed from Engineering Digital Archive System (EDAS).
Therefore signatures are not essentially required.

MATERIAL CODES FOR COUPLER PLATE SETS INCLUDING ACCESSORIES FOR LADDER TYPE CABLE TRAYS –TYPE1 (IN CASE OF LOOSE SUPPLY)

VAR NO	DESCRIPTION	MATERIAL CODE
06	COUPLER PLATES SET ALONG WITH ACCESSORIES FOR 750 mm LADDER TYPE (CHANNEL) CABLE TRAY– TYPE1	HY7433662065
07	COUPLER PLATES SET ALONG WITH ACCESSORIES FOR 600 mm LADDER TYPE (CHANNEL) CABLE TRAY– TYPE1	HY7433662073
08	COUPLER PLATES SET ALONG WITH ACCESSORIES FOR 450 mm LADDER TYPE (CHANNEL) CABLE TRAY– TYPE1	HY7433662081
09	COUPLER PLATES SET ALONG WITH ACCESSORIES FOR 300 mm LADDER TYPE (CHANNEL) CABLE TRAY– TYPE1	HY7433662090
10	COUPLER PLATES SET ALONG WITH ACCESSORIES FOR 150 mm LADDER TYPE (CHANNEL) CABLE TRAY– TYPE1	HY7433662103

COPYRIGHT AND CONFIDENTIAL
The Information on this document is the property of BHARAT HEAVY ELECTRICALS LIMITED.
It must not be used directly or indirectly in any way detrimental to the interest of the company.

RESTRICTED USE

Nov Thu 12 13:00 2020
This Drawing is printed from Engineering Digital Archive System (EDAS).
Therefore signatures are not essentially required.

TYPICAL ARRANGEMENT FOR CABLE TRAY COVER ALONG WITH ACCESSORIES FOR LADDER TYPE (CHANNEL) CABLE TRAY1

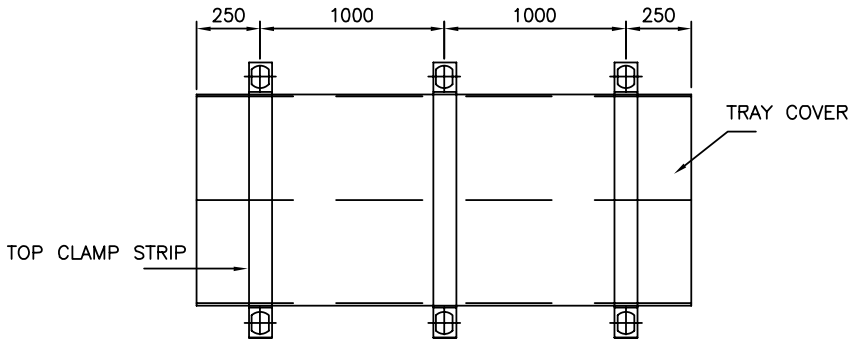

CABLE TRAY COVER WITH ACCESSORIES–PLAN

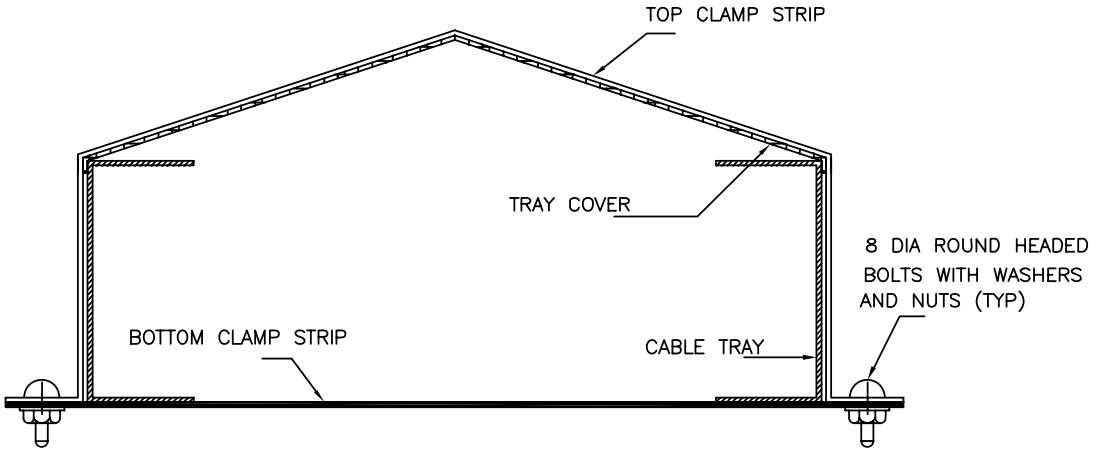

CABLE TRAY COVER WITH ACCESSORIES–ELEVATION

NOTES

1. CABLE TRAY COVER SHALL INCLUDE 1 No OF TRAY COVER OF 2500 mm LENGTH ALONG WITH 3Nos OF TOP CLAMP STRIP, 3Nos OF BOTTOM CLAMP STRIP AND 6Nos OF BOLTS ALONG WITH NUTS AND WASHERS.
2. ALL DIMENSIONS ARE IN mm. NEGATIVE TOLERANCE ON THICKNESS OF CABLE TRAY & ACCESSORIES ARE NOT ACCEPTABLE. HOWEVER TOLERANCE OF ±1% IS ACCEPTABLE ON LENGTH AND WIDTH OF CABLE TRAY & ACCESSORIES.
3. ALL THE ACCESSORIES EXCEPT NUTS AND BOLTS SHALL BE FABRICATED FROM 2mm THICK HOT ROLLED SHEET STEEL. HOT DIP GALVANISING SHALL BE DONE AFTER FABRICATION AS PER RELAVANT IS STANDARDS. THE AMOUNT OF GALVANISING SHALL BE MIN. 610 g/m2.
4. MATERIAL CODES FOR CABLE TRAY COVERS WITH ACCESSORIES FOR VARIOUS TYPE OF LADDER TYPE (CHANNEL) CABLE TRAYS–TYPE1, ARE GIVEN IN THE FOLLOWING PAGE.
5. IN ORDER TO MAINTAIN PROPER EARTH CONTINUITY BOND, PAINTING ON SURFACES IN CONTACT BETWEEN COUPLER PLATES AND CABLE TRAY SHALL BE SCRAPPED AT THE TIME OF INSTALLATION.
6. THE DETAILS SHOWN IN THE DRAWING ARE TYPICAL FOR LADDER TYPE (CHANNEL) CABLE TRAYS.

COPYRIGHT AND CONFIDENTIAL
The Information on this document is the property of BHARAT HEAVY ELECTRICALS LIMITED.
It must not be used directly or indirectly in any way detrimental to the interest of the company.

RESTRICTED USE

Nov Thu 12 13:00 2020
This Drawing is printed from Engineering Digital Archive System (EDAS).
Therefore signatures are not essentially required.

TYPICAL ARRANGEMENT FOR CABLE TRAY COVER AND ACCESSORIES

FOR LADDER TYPE (CHANNEL) CABLE TRAYS–TYPE1

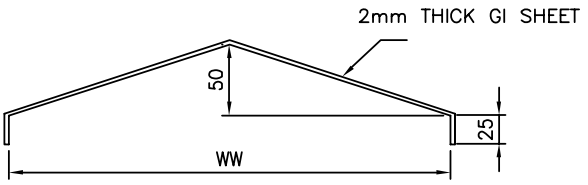

CABLE TRAY COVER–ELEVATION

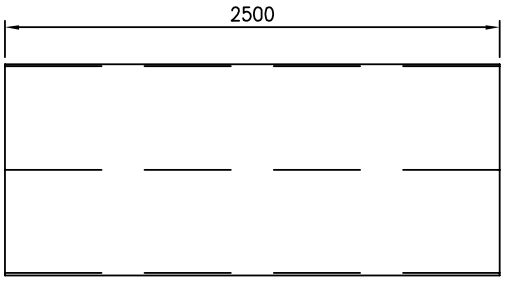

CABLE TRAY COVER–PLAN

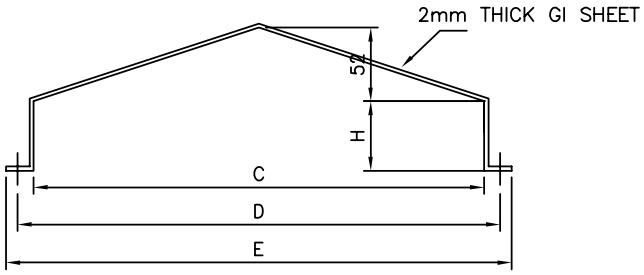

TOP CLAMP STRIP–ELEVATION

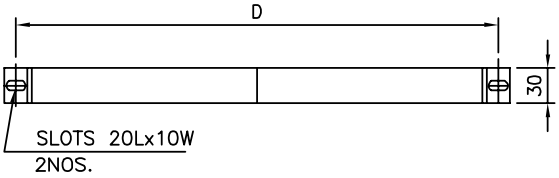

TOP CLAMP STRIP–PLAN

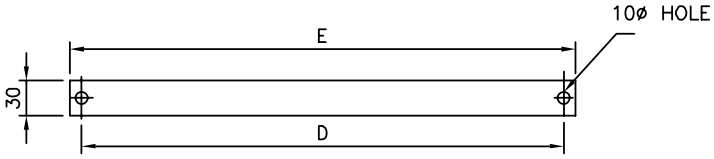

BOTTOM CLAMP STRIP–ELEVATION

DESCRIPTION	WW	C	D	E	H
COVER FOR 750mm TRAY	756	760	794	824	100
COVER FOR 600mm TRAY	606	610	644	674	100
COVER FOR 450mm TRAY	456	460	494	524	100
COVER FOR 300mm TRAY	306	310	344	374	100
COVER FOR 150mm TRAY	156	160	194	224	50

COPYRIGHT AND CONFIDENTIAL
The Information on this document is the property of BHARAT HEAVY ELECTRICALS LIMITED.
It must not be used directly or indirectly in any way detrimental to the interest of the company.

RESTRICTED USE

Nov Thu 12 13:00 2020
This Drawing is printed from Engineering Digital Archive System (EDAS).
Therefore signatures are not essentially required.

MATERIAL CODES FOR TRAY COVERS ALONG WITH ACCESSORIES FOR LADDER TYPE (CHANNEL) CABLE TRAYS–TYPE1

VAR NO	DESCRIPTION	MATERIAL CODE
11	COVER ALONG WITH ACCESSORIES FOR 750 mm WIDTH LADDER TYPE (CHANNEL) CABLE TRAY–TYPE1	HY7433662111
12	COVER ALONG WITH ACCESSORIES FOR 600 mm WIDTH LADDER TYPE (CHANNEL) CABLE TRAY–TYPE1	HY7433662120
13	COVER ALONG WITH ACCESSORIES FOR 450 mm WIDTH LADDER TYPE (CHANNEL) CABLE TRAY–TYPE1	HY7433662138
14	COVER ALONG WITH ACCESSORIES FOR 300 mm WIDTH LADDER TYPE (CHANNEL) CABLE TRAY–TYPE1	HY7433662146
15	COVER ALONG WITH ACCESSORIES FOR 150 mm WIDTH LADDER TYPE (CHANNEL) CABLE TRAY–TYPE1	HY7433662154

COPYRIGHT AND CONFIDENTIAL
The Information on this document is the property of BHARAT HEAVY ELECTRICALS LIMITED.
It must not be used directly or indirectly in any way detrimental to the interest of the company.

RESTRICTED USE

Nov Thu 12 13:00 2020
This Drawing is printed from Engineering Digital Archive System (EDAS).
Therefore signatures are not essentially required.

TYPICAL ARRANGEMENT FOR HORIZONTAL TEE ALONG WITH ACCESSORIES AND COUPLER PLATES FOR LADDER TYPE (CHANNEL) CABLE TRAYS–TYPE1

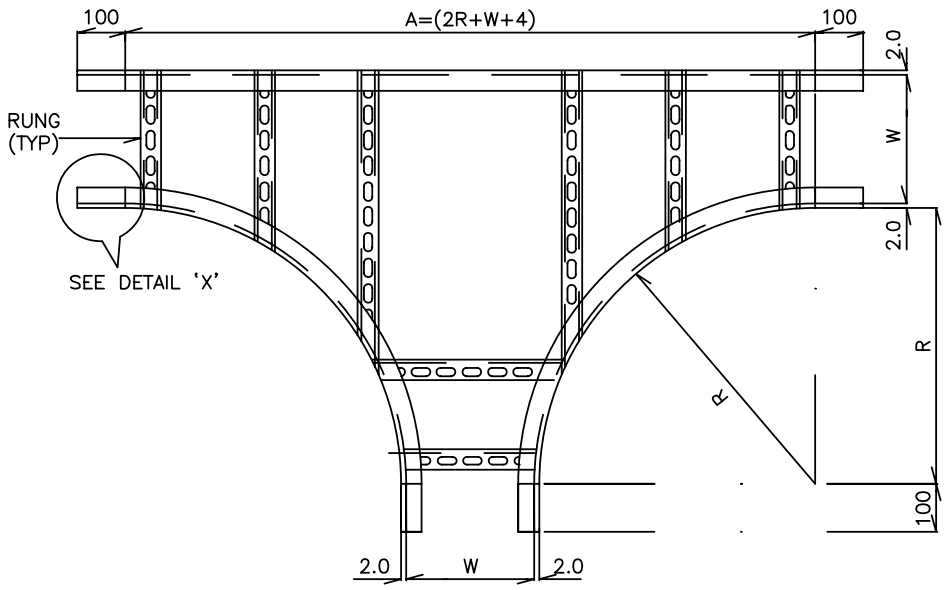

DIMENTIONAL DETAILS:

WIDTH OF TRAY (W)	DEPTH OF TRAY (H)	A=(2R+W+4)				
		R=450	R=600	R=900	R=1250	R=1500
150	50	1054	1354	NA	NA	NA
300	100	NA	1504	2104	NA	NA
450	100	NA	1654	2254	NA	NA
600	100	NA	NA	2404	3104	3604
750	100	NA	NA	2554	3254	3754

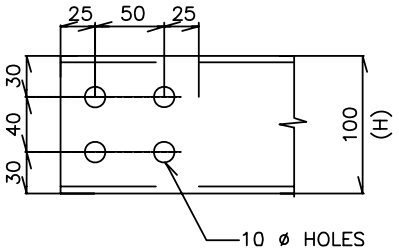

DETAIL–X

NOTES

1. HORIZONTAL "TEE" FOR LADDER TYPE (CHANNEL) CABLE TRAY–TYPE1, SHALL INCLUDE 4 SETS OF COUPLER PLATES ALONG WITH ACCESSORIES LIKE WASHERS, NUTS AND BOLTS AS SHOWN IN THE DRAWING.
2. ALL DIMENSIONS ARE IN mm. NEGATIVE TOLERANCE ON THICKNESS OF CABLE TRAY & ACCESSORIES ARE NOT ACCEPTABLE. HOWEVER TOLERANCE OF ±1% IS ACCEPTABLE ON LENGTH AND WIDTH OF CABLE TRAY & ACCESSORIES.
3. MATERIAL CODES FOR HORIZONTAL TEE WITH ACCESSORIES FOR VARIOUS TYPE OF LADDER TYPE (CHANNEL) CABLE TRAYS–TYPE1, ARE GIVEN IN THE FOLLOWING PAGE.
4. IN ORDER TO MAINTAIN PROPER EARTH CONTINUITY BOND, PAINTING ON SURFACES IN CONTACT BETWEEN COUPLER PLATES AND CABLE TRAY SHALL BE SCRAPPED AT THE TIME OF INSTALLATION.
5. THE DETAILS SHOWN IN THE DRAWING ARE TYPICAL FOR LADDER TYPE (CHANNEL) CABLE TRAYS.

COPYRIGHT AND CONFIDENTIAL
The Information on this document is the property of BHARAT HEAVY ELECTRICALS LIMITED.
It must not be used directly or indirectly in any way detrimental to the interest of the company.

RESTRICTED USE

Nov Thu 12 13:00 2020
This Drawing is printed from Engineering Digital Archive System (EDAS).
Therefore signatures are not essentially required.

MATERIAL CODES FOR HORIZONTAL ''TEE'' ALONG WITH ACCESSORIES AND AND COUPLER PLATES FOR LADDER TYPE (CHANNEL) CABLE TRAYS–TYPE1

VAR NO	DESCRIPTION	MATERIAL CODE
16	HORIZONTAL 'TEE' OF 450 mm BENDING RADIUS ALONG WITH COUPLER PLATES FOR 150 mm WIDTH LADDER TYPE (CHANNEL) CABLE TRAY–TYPE1.	HY7433662162
17	HORIZONTAL 'TEE' OF 600 mm BENDING RADIUS ALONG WITH COUPLER PLATES FOR 150 mm WIDTH LADDER TYPE (CHANNEL) CABLE TRAY–TYPE1	HY7433662170
18	HORIZONTAL 'TEE' OF 600 mm BENDING RADIUS ALONG WITH COUPLER PLATES FOR 300 mm WIDTH LADDER TYPE (CHANNEL) CABLE TRAY–TYPE1	HY7433662189
19	HORIZONTAL 'TEE' OF 900 mm BENDING RADIUS ALONG WITH COUPLER PLATES FOR 300 mm WIDTH LADDER TYPE (CHANNEL) CABLE TRAY–TYPE1	HY7433662197
20	HORIZONTAL 'TEE' OF 600 mm BENDING RADIUS ALONG WITH COUPLER PLATES FOR 450 mm WIDTH LADDER TYPE (CHANNEL) CABLE TRAY–TYPE1	HY7433662200
21	HORIZONTAL 'TEE' OF 900 mm BENDING RADIUS ALONG WITH COUPLER PALTES FOR 450 mm WIDTH LADDER TYPE (CHANNEL) CABLE TRAY–TYPE1	HY7433662219
22	HORIZONTAL 'TEE' OF 900 mm BENDING RADIUS ALONG WITH COUPLER PALTES FOR 600 mm WIDTH LADDER TYPE (CHANNEL) CABLE TRAY–TYPE1	HY7433662227
23	HORIZONTAL 'TEE' OF 1250 mm BENDING RADIUS ALONG WITH COUPLER PLATES FOR 600 mm WIDTH LADDER TYPE (CHANNEL) CABLE TRAY–TYPE1	HY7433662235
24	HORIZONTAL 'TEE' OF 1500 mm BENDING RADIUS ALONG WITH COUPLER PLATES FOR 600 mm WIDTH LADDER TYPE (CHANNEL) CABLE TRAY–TYPE1	HY7433662243
25	HORIZONTAL 'TEE' OF 900 mm BENDING RADIUS ALONG WITH COUPLER PLATES FOR 750 mm WIDTH LADDER TYPE (CHANNEL) CABLE TRAY–TYPE1	HY7433662251
26	HORIZONTAL 'TEE' OF 1250 mm BENDING RADIUS ALONG WITH COUPLER PALTES FOR 750 mm WIDTH LADDER TYPE (CHANNEL) CABLE TRAY–TYPE1	HY7433662260
27	HORIZONTAL 'TEE' OF 1500 mm BENDING RADIUS ALONG WITH COUPLER PLATES FOR 750 mm WIDTH LADDER TYPE (CHANNEL) CABLE TRAY–TYPE1	HY7433662278

COPYRIGHT AND CONFIDENTIAL
The Information on this document is the property of BHARAT HEAVY ELECTRICALS LIMITED.
It must not be used directly or indirectly in any way detrimental to the interest of the company.

RESTRICTED USE

Nov Thu 12 13:00 2020
This Drawing is printed from Engineering Digital Archive System (EDAS).
Therefore signatures are not essentially required.

TYPICAL ARRANGEMENT FOR HORIZONTAL ELBOW 90° ALONG WITH ACCESSORIES AND COUPLER PLATES FOR LADDER TYPE (CHANNEL) CABLE TRAYS–TYPE1

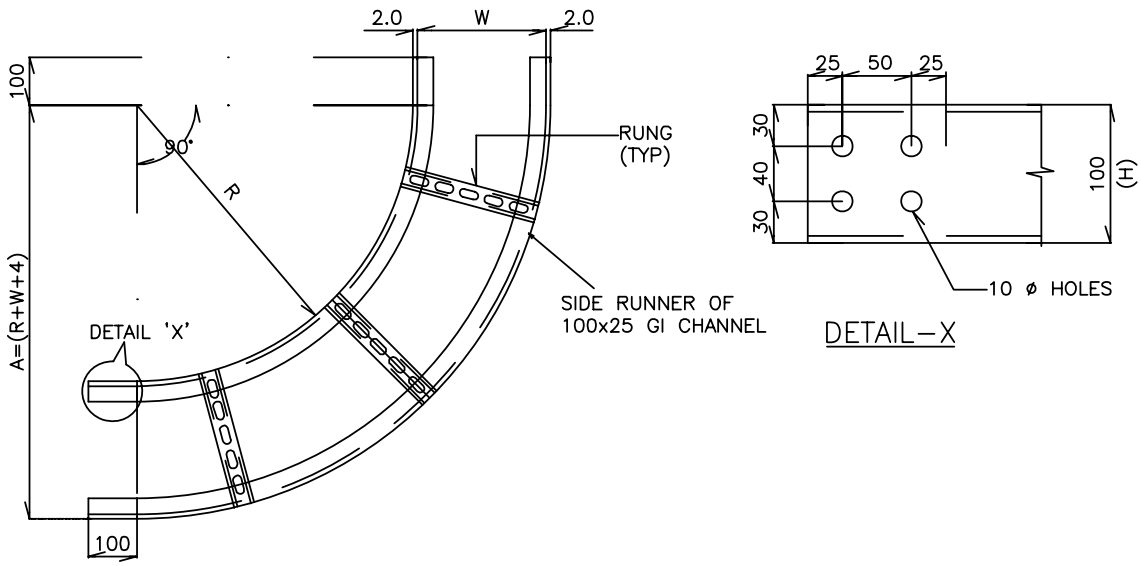

DIMENTIONAL DETAILS:

WIDTH OF TRAY (W)	DEPTH OF TRAY (H)	A=(R+W+4)				
		R=450	R=600	R=900	R=1250	R=1500
150	50	604	754	NA	NA	NA
300	100	NA	904	1204	NA	NA
450	100	NA	1054	1354	NA	NA
600	100	NA	NA	1504	1854	2104
750	100	NA	NA	1654	2004	2254

NOTES

1. HORIZONTAL 90° ELOW FOR LADDER TYPE (CHANNEL) CABLE TRAY–TYPE1, SHALL INCLUDE 2 SETS OF COUPLER PLATES ALONG WITH ACCESSORIES LIKE NUTS, BOLTS AND WASHERS AS SHOWN IN THE DRAWING.
2. ALL DIMENSIONS ARE IN mm. NEGATIVE TOLERANCE ON THICKNESS OF CABLE TRAY & ACCESSORIES ARE NOT ACCEPTABLE.HOWEVER TOLERANCE OF ±1% IS ACCEPTABLE ON LENGTH AND WIDTH OF CABLE TRAY & ACCESSORIES.
3. MATERIAL CODES FOR HORIZONTAL ELBOW 90° WITH ACCESSORIES FOR VARIOUS TYPE OF LADDER TYPE (CHANNEL) CABLE TRAYS–TYPE1, ARE GIVEN IN THE FOLLOWING PAGE.
4. IN ORDER TO MAINTAIN PROPER EARTH CONTINUITY BOND, PAINTING ON SURFACES IN CONTACT BETWEEN COUPLER PLATES AND CABLE TRAY SHALL BE SCRAPPED AT THE TIME OF INSTALLATION.
5. THE DETAILS SHOWN IN THE DRAWING ARE TYPICAL FOR LADDER TYPE (CHANNEL) CABLE TRAYS.

COPYRIGHT AND CONFIDENTIAL
The Information on this document is the property of BHARAT HEAVY ELECTRICALS LIMITED.
It must not be used directly or indirectly in any way detrimental to the interest of the company.

RESTRICTED USE

Nov Thu 12 13:00 2020
This Drawing is printed from Engineering Digital Archive System (EDAS).
Therefore signatures are not essentially required.

MATERIAL CODES FOR 90° HORIZONTAL ELOW 90° ALONG WITH ACCESSORIES AND COUPLER PLATES FOR LADDER TYPE (CHANNEL) CABLE TRAYS–TYPE1

VAR NO	DESCRIPTION	MATERIAL CODE
28	HORIZONTAL ELBOW OF 450 mm BENDING RADIUS ALONG COUPLER PLATES FOR 150 mm WIDTH LADDER TYPE (CHANNEL) CABLE TRAY–TYPE1	HY7433662286
29	HORIZONTAL ELBOW OF 600 mm BENDING RADIUS ALONG COUPLER PLATES FOR 150 mm WIDTH LADDER TYPE (CHANNEL) CABLE TRAY–TYPE1	HY7433662294
30	HORIZONTAL ELBOW OF 600 mm BENDING RADIUS ALONG COUPLER PLATES FOR 300 mm WIDTH LADDER TYPE (CHANNEL) CABLE TRAY–TYPE1	HY7433662308
31	HORIZONTAL ELBOW OF 900 mm BENDING RADIUS ALONG COUPLER PLATES FOR 300 mm WIDTH LADDER TYPE (CHANNEL) CABLE TRAY–TYPE1	HY7433662316
32	HORIZONTAL ELBOW OF 600 mm BENDING RADIUS ALONG COUPLER PLATES FOR 450 mm WIDTH LADDER TYPE (CHANNEL) CABLE TRAY–TYPE1	HY7433662324
33	HORIZONTAL ELBOW OF 900 mm BENDING RADIUS ALONG COUPLER PLATES FOR 450 mm WIDTH LADDER TYPE (CHANNEL) CABLE TRAY–TYPE1	HY7433662332
34	HORIZONTAL ELBOW OF 900 mm BENDING RADIUS ALONG COUPLER PLATES FOR 600 mm WIDTH LADDER TYPE (CHANNEL) CABLE TRAY–TYPE1	HY7433662340
35	HORIZONTAL ELBOW OF 1250 mm BENDING RADIUS ALONG COUPLER PLATES FOR 600 mm WIDTH LADDER TYPE (CHANNEL) CABLE TRAY–TYPE1	HY7433662359
36	HORIZONTAL ELBOW OF 1500 mm BENDING RADIUS ALONG COUPLER PLATES FOR 600 mm WIDTH LADDER TYPE (CHANNEL) CABLE TRAY–TYPE1	HY7433662367
37	HORIZONTAL ELBOW OF 900 mm BENDING RADIUS ALONG COUPLER PLATES FOR 750 mm WIDTH LADDER TYPE (CHANNEL) CABLE TRAY–TYPE1	HY7433662375
38	HORIZONTAL ELBOW OF 1250 mm BENDING RADIUS ALONG COUPLER PLATES FOR 750 mm WIDTH LADDER TYPE (CHANNEL) CABLE TRAY–TYPE1	HY7433662383
39	HORIZONTAL ELBOW OF 1500 mm BENDING RADIUS ALONG COUPLER PLATES FOR 750 mm WIDTH LADDER TYPE (CHANNEL) CABLE TRAY–TYPE1	HY7433662391

COPYRIGHT AND CONFIDENTIAL
The Information on this document is the property of BHARAT HEAVY ELECTRICALS LIMITED.
It must not be used directly or indirectly in any way detrimental to the interest of the company.

RESTRICTED USE

Nov Thu 12 13:00 2020
This Drawing is printed from Engineering Digital Archive System (EDAS).
Therefore signatures are not essentially required.

TYPICAL ARRANGEMENT FOR VERTICAL ELBOW 90° UP/DOWN WITH ACCESSORIES AND COUPLER PLATES FOR LADDER TYPE (CHANNEL) CABLE TRAYS–TYPE1

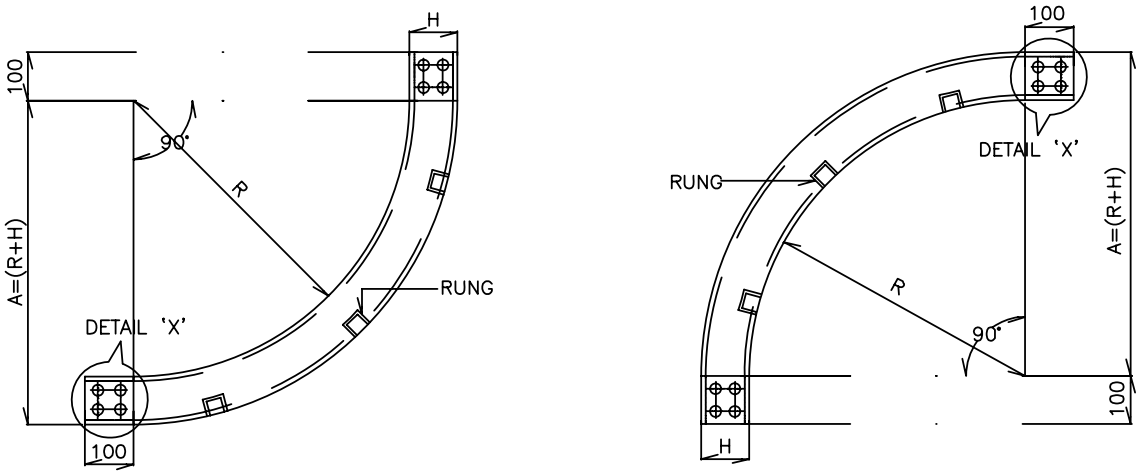

VERTICAL ELBOW 90° UP / DOWN

DIMENTIONAL DETAILS:

WIDTH OF TRAY (W)	DEPTH OF TRAY (H)	A=(R+H)				
		R=450	R=600	R=900	R=1250	R=1500
150	50	550	700	NA	NA	NA
300	100	NA	700	1000	NA	NA
450	100	NA	700	1000	NA	NA
600	100	NA	NA	1000	1350	1600
750	100	NA	NA	1000	1350	1600

NOTES

1. VERTICAL ELBOW 90° UP/DOWN FOR LADDER TYPE (CHANNEL) CABLE TRAY–TYPE1, SHALL INCLUDE 2 SETS OF COUPLER PLATES ALONG WITH ACCESSORIES LIKE WASHERS, NUTS AND BOLTS AS SHOWN IN THE DRAWING.
2. ALL DIMENSIONS ARE IN mm. NEGATIVE TOLERANCE ON THICKNESS OF CABLE TRAY & ACCESSORIES ARE NOT ACCEPTABLE.HOWEVER TOLERANCE OF ±1% IS ACCEPTABLE ON LENGTH AND WIDTH OF CABLE TRAY & ACCESSORIES.
3. MATERIAL CODES FOR VERTICAL ELBOW 90° UP/DOWN WITH ACCESSORIES FOR VARIOUS TYPE OF LADDER TYPE (CHANNEL) CABLE TRAYS–TYPE1, ARE GIVEN IN THE FOLLOWING PAGE.
4. IN ORDER TO MAINTAIN PROPER EARTH CONTINUITY BOND, PAINTING ON SURFACES IN CONTACT BETWEEN COUPLER PLATES AND CABLE TRAY SHALL BE SCRAPPED AT THE TIME OF INSTALLATION.
5. THE DETAILS SHOWN IN THE DRAWING ARE TYPICAL FOR LADDER TYPE (CHANNEL) CABLE TRAYS.

COPYRIGHT AND CONFIDENTIAL
The Information on this document is the property of BHARAT HEAVY ELECTRICALS LIMITED.
It must not be used directly or indirectly in any way detrimental to the interest of the company.

RESTRICTED USE

Nov Thu 12 13:00 2020
This Drawing is printed from Engineering Digital Archive System (EDAS).
Therefore signatures are not essentially required.

MATERIAL CODES FOR 90° VERTICAL UP/DOWN ALONG WITH ACCESSORIES AND COUPLER PLATES FOR LADDER TYPE (CHANNEL) CABLE TRAYS–TYPE1

VAR NO	DESCRIPTION	MATERIAL CODE
40	VERTICAL UP OF 450 mm BENDING RADIUS ALONG WITH COUPLER PLATES FOR 150 mm WIDTH LADDER TYPE (CHANNEL) CABLE TRAY–TYPE1	HY7433662405
41	VERTICAL DOWN OF 450 mm BENDING RADIUS ALONG WITH COUPLER PLATES FOR 150 mm WIDTH LADDER TYPE (CHANNEL) CABLE TRAY–TYPE1	HY7433662413
42	VERTICAL UP OF 600 mm BENDING RADIUS ALONG WITH COUPLER PLATES FOR 150 mm WIDTH LADDER TYPE (CHANNEL) CABLE TRAY–TYPE1	HY7433662421
43	VERTICAL DOWN OF 600 mm BENDING RADIUS ALONG WITH COUPLER PLATES FOR 150 mm WIDTH LADDER TYPE (CHANNEL) CABLE TRAY–TYPE1	HY7433662430
44	VERTICAL UP OF 600 mm BENDING RADIUS ALONG WITH COUPLER PLATES FOR 300 mm WIDTH LADDER TYPE (CHANNEL) CABLE TRAY–TYPE1	HY7433662448
45	VERTICAL DOWN OF 600 mm BENDING RADIUS ALONG WITH COUPLER PLATES FOR 300 mm WIDTH LADDER TYPE (CHANNEL) CABLE TRAY–TYPE1	HY7433662456
46	VERTICAL UP OF 900 mm BENDING RADIUS ALONG WITH COUPLER PLATES FOR 300 mm WIDTH LADDER TYPE (CHANNEL) CABLE TRAY–TYPE1	HY7433662464
47	VERTICAL DOWN OF 900 mm BENDING RADIUS ALONG WITH COUPLER PLATES FOR 300 mm WIDTH LADDER TYPE (CHANNEL) CABLE TRAY–TYPE1	HY7433662472
48	VERTICAL UP OF 600 mm BENDING RADIUS ALONG WITH COUPLER PLATES FOR 450 mm WIDTH LADDER TYPE (CHANNEL) CABLE TRAY–TYPE1	HY7433662480
49	VERTICAL DOWN OF 600 mm BENDING RADIUS ALONG WITH COUPLER PLATES FOR 450 mm WIDTH LADDER TYPE (CHANNEL) CABLE TRAY–TYPE1	HY7433662499
50	VERTICAL UP OF 900 mm BENDING RADIUS ALONG WITH COUPLER PLATES FOR 450 mm WIDTH LADDER TYPE (CHANNEL) CABLE TRAY–TYPE1	HY7433662502
51	VERTICAL DOWN OF 900 mm BENDING RADIUS ALONG WITH COUPLER PLATES FOR 450 mm WIDTH LADDER TYPE (CHANNEL) CABLE TRAY–TYPE1	HY7433662510

COPYRIGHT AND CONFIDENTIAL
The Information on this document is the property of BHARAT HEAVY ELECTRICALS LIMITED.
It must not be used directly or indirectly in any way detrimental to the interest of the company.

RESTRICTED USE

Nov Thu 12 13:00 2020
This Drawing is printed from Engineering Digital Archive System (EDAS).
Therefore signatures are not essentially required.

MATERIAL CODES FOR 90° VERTICAL UP/DOWN ALONG WITH ACCESSORIES AND COUPLER PLATES FOR LADDER TYPE (CHANNEL) CABLE TRAYS–TYPE1

VAR NO	DESCRIPTION	MATERIAL CODE
52	VERTICAL UP OF 900 mm BENDING RADIUS ALONG WITH COUPLER PLATES FOR 600 mm WIDTH LADDER TYPE (CHANNEL) CABLE TRAY–TYPE1	HY7433662529
53	VERTICAL DOWN OF 900 mm BENDING RADIUS ALONG WITH COUPLER PLATES FOR 600 mm WIDTH LADDER TYPE (CHANNEL) CABLE TRAY–TYPE1	HY7433662537
54	VERTICAL UP OF 1250 mm BENDING RADIUS ALONG WITH COUPLER PLATES FOR 600 mm WIDTH LADDER TYPE (CHANNEL) CABLE TRAY–TYPE1	HY7433662545
55	VERTICAL DOWN OF 1250 mm BENDING RADIUS ALONG WITH COUPLER PLATES FOR 600 mm WIDTH LADDER TYPE (CHANNEL) CABLE TRAY–TYPE1	HY7433662553
56	VERTICAL UP OF 1500 mm BENDING RADIUS ALONG WITH COUPLER PLATES FOR 600 mm WIDTH LADDER TYPE (CHANNEL) CABLE TRAY–TYPE1	HY7433662561
57	VERTICAL DOWN OF 1500 mm BENDING RADIUS ALONG WITH COUPLER PLATES FOR 600 mm WIDTH LADDER TYPE (CHANNEL) CABLE TRAY–TYPE1	HY7433662570
58	VERTICAL UP OF 900 mm BENDING RADIUS ALONG WITH COUPLER PLATES FOR 750 mm WIDTH LADDER TYPE (CHANNEL) CABLE TRAY–TYPE1	HY7433662588
59	VERTICAL DOWN OF 900 mm BENDING RADIUS ALONG WITH COUPLER PLATES FOR 750 mm WIDTH LADDER TYPE (CHANNEL) CABLE TRAY–TYPE1	HY7433662596
60	VERTICAL UP OF 1250 mm BENDING RADIUS ALONG WITH COUPLER PLATES FOR 750 mm WIDTH LADDER TYPE (CHANNEL) CABLE TRAY–TYPE1	HY7433662600
61	VERTICAL DOWN OF 1250 mm BENDING RADIUS ALONG WITH COUPLER PLATES FOR 750 mm WIDTH LADDER TYPE (CHANNEL) CABLE TRAY–TYPE1	HY7433662618
62	VERTICAL UP OF 1500 mm BENDING RADIUS ALONG WITH COUPLER PLATES FOR 750 mm WIDTH LADDER TYPE (CHANNEL) CABLE TRAY–TYPE1	HY7433662626
63	VERTICAL DOWN OF 1500 mm BENDING RADIUS ALONG WITH COUPLER PLATES FOR 750 mm WIDTH LADDER TYPE (CHANNEL) CABLE TRAY–TYPE1	HY7433662634

COPYRIGHT AND CONFIDENTIAL
The Information on this document is the property of BHARAT HEAVY ELECTRICALS LIMITED.
It must not be used directly or indirectly in any way detrimental to the interest of the company.

RESTRICTED USE

Nov Thu 12 13:00 2020
This Drawing is printed from Engineering Digital Archive System (EDAS).
Therefore signatures are not essentially required.

TYPICAL ARRANGEMENT FOR REDUCERS ALONG WITH ACCESSORIES AND COUPLER PLATES FOR LADDER TYPE (CHANNEL) CABLE TRAYS–TYPE1

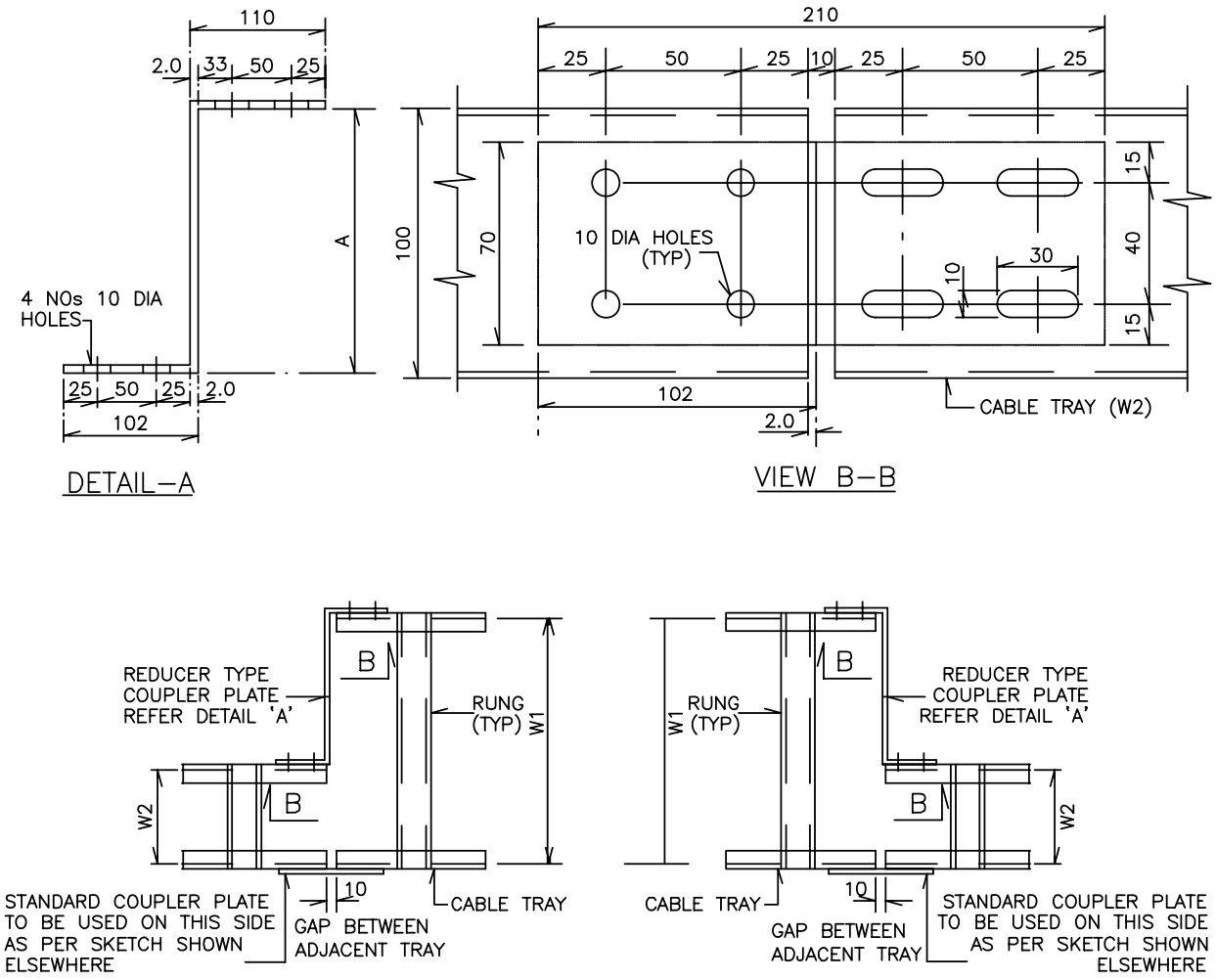

NOTES

1. REDUCER FOR LADDER TYPE CABLE TRAY TYPE1, SHALL INCLUDE 2 SETS OF COUPLER PLATES ALONG WITH ACCESSORIES LIKE WASHERS, NUTS AND BOLTS AS SHOWN IN THE DRAWING.
2. ALL DIMENSIONS ARE IN mm. NEGATIVE TOLERANCE ON THICKNESS OF CABLE TRAY & ACCESSORIES ARE NOT ACCEPTABLE. HOWEVER TOLERANCE OF ±1% IS ACCEPTABLE ON LENGTH AND WIDTH OF CABLE TRAY & ACCESSORIES.
3. MATERIAL CODES FOR REDUCERS WITH ACCESSORIES FOR VARIOUS TYPE OF LADDER TYPE CABLE TRAYS–TYPE1 ARE GIVEN IN THE FOLLOWING PAGE.
4. IN ORDER TO MAINTAIN PROPER EARTH CONTINUITY BOND, PAINTING ON SURFACES IN CONTACT BETWEEN COUPLER PLATES AND CABLE TRAY SHALL BE SCRAPPED AT THE TIME OF INSTALLATION.
5. THE DETAILS SHOWN IN THE DRAWING ARE TYPICAL FOR LADDER TYPE (CHANNEL) CABLE TRAYS.

COPYRIGHT AND CONFIDENTIAL
The Information on this document is the property of BHARAT HEAVY ELECTRICALS LIMITED.
It must not be used directly or indirectly in any way detrimental to the interest of the company.

RESTRICTED USE

Nov Thu 12 13:00 2020
This Drawing is printed from Engineering Digital Archive System (EDAS).
Therefore signatures are not essentially required.

MATERIAL CODES FOR CABLE TRAY REDUCERS ALONG WITH ACCESSORIES AND COUPLER PLATES FOR LADDER TYPE (CHANNEL) CABLE TRAYS–TYPE1

VAR NO	DESCRIPTION	MATERIAL CODE
64	750MM TO 600 mm RIGHT HAND REDUCER ALONG WITH COUPLER PLATES FOR LADDER TYPE (CHANNEL) CABLE TRAYS–TYPE1.	HY7433662642
65	750MM TO 600 mm LEFT HAND REDUCER ALONG WITH COUPLER PLATES FOR LADDER TYPE (CHANNEL) CABLE TRAYS–TYPE1.	HY7433662650
66	750MM TO 450 mm RIGHT HAND REDUCER ALONG WITH COUPLER PLATES FOR LADDER TYPE (CHANNEL) CABLE TRAYS–TYPE1.	HY7433662669
67	750MM TO 450 mm LEFT HAND REDUCER ALONG WITH COUPLER PLATES FOR LADDER TYPE (CHANNEL) CABLE TRAYS–TYPE1.	HY7433662677
68	750MM TO 300 mm RIGHT HAND REDUCER ALONG WITH COUPLER PLATES FOR LADDER TYPE (CHANNEL) CABLE TRAYS–TYPE1.	HY7433662685
69	750MM TO 300 mm LEFT HAND REDUCER ALONG WITH COUPLER PLATES FOR LADDER TYPE (CHANNEL) CABLE TRAYS–TYPE1.	HY7433662693
70	600MM TO 450 mm RIGHT HAND REDUCER ALONG WITH COUPLER PLATES FOR LADDER TYPE (CHANNEL) CABLE TRAYS–TYPE1.	HY7433662707
71	600MM TO 450 mm LEFT HAND REDUCER ALONG WITH COUPLER PLATES FOR LADDER TYPE (CHANNEL) CABLE TRAYS–TYPE1.	HY7433662715
72	600MM TO 300 mm RIGHT HAND REDUCER ALONG WITH COUPLER PLATES FOR LADDER TYPE (CHANNEL) CABLE TRAYS–TYPE1.	HY7433662723
73	600MM TO 300 mm LEFT HAND REDUCER ALONG WITH COUPLER PLATES FOR LADDER TYPE (CHANNEL) CABLE TRAYS–TYPE1.	HY7433662731
74	600MM TO 150 mm RIGHT HAND REDUCER ALONG WITH COUPLER PLATES FOR LADDER TYPE (CHANNEL) CABLE TRAYS–TYPE1.	HY7433662740
75	600MM TO 150 mm LEFT HAND REDUCER ALONG WITH COUPLER PLATES FOR LADDER TYPE (CHANNEL) CABLE TRAYS–TYPE1.	HY7433662758
76	450MM TO 300 mm RIGHT HAND REDUCER ALONG WITH COUPLER PLATES FOR LADDER TYPE (CHANNEL) CABLE TRAYS–TYPE1.	HY7433662766
77	450MM TO 300 mm LEFT HAND REDUCER ALONG WITH COUPLER PLATES FOR LADDER TYPE (CHANNEL) CABLE TRAYS–TYPE1.	HY7433662774
78	450MM TO 150 mm RIGHT HAND REDUCER ALONG WITH COUPLER PLATES FOR LADDER TYPE (CHANNEL) CABLE TRAYS–TYPE1.	HY7433662782
79	450MM TO 150 mm LEFT HAND REDUCER ALONG WITH COUPLER PLATES FOR LADDER TYPE (CHANNEL) CABLE TRAYS–TYPE1.	HY7433662790
80	300MM TO 150 mm RIGHT HAND REDUCER ALONG WITH COUPLER PLATES FOR LADDER TYPE (CHANNEL) CABLE TRAYS–TYPE1.	HY7433662804
81	300MM TO 150 mm LEFT HAND REDUCER ALONG WITH COUPLER PLATES FOR LADDER TYPE (CHANNEL) CABLE TRAYS–TYPE1.	HY7433662812

COPYRIGHT AND CONFIDENTIAL
The Information on this document is the property of BHARAT HEAVY ELECTRICALS LIMITED.
It must not be used directly or indirectly in any way detrimental to the interest of the company.

RESTRICTED USE

Nov Thu 12 13:00 2020
This Drawing is printed from Engineering Digital Archive System (EDAS).
Therefore signatures are not essentially required.

TYPICAL ARRANGEMENT FOR CROSS CABLE ALONG WITH ACCESSORIES AND COUPLER PLATES FOR LADDER TYPE (CHANNEL) CABLE TRAYS–TYPE1

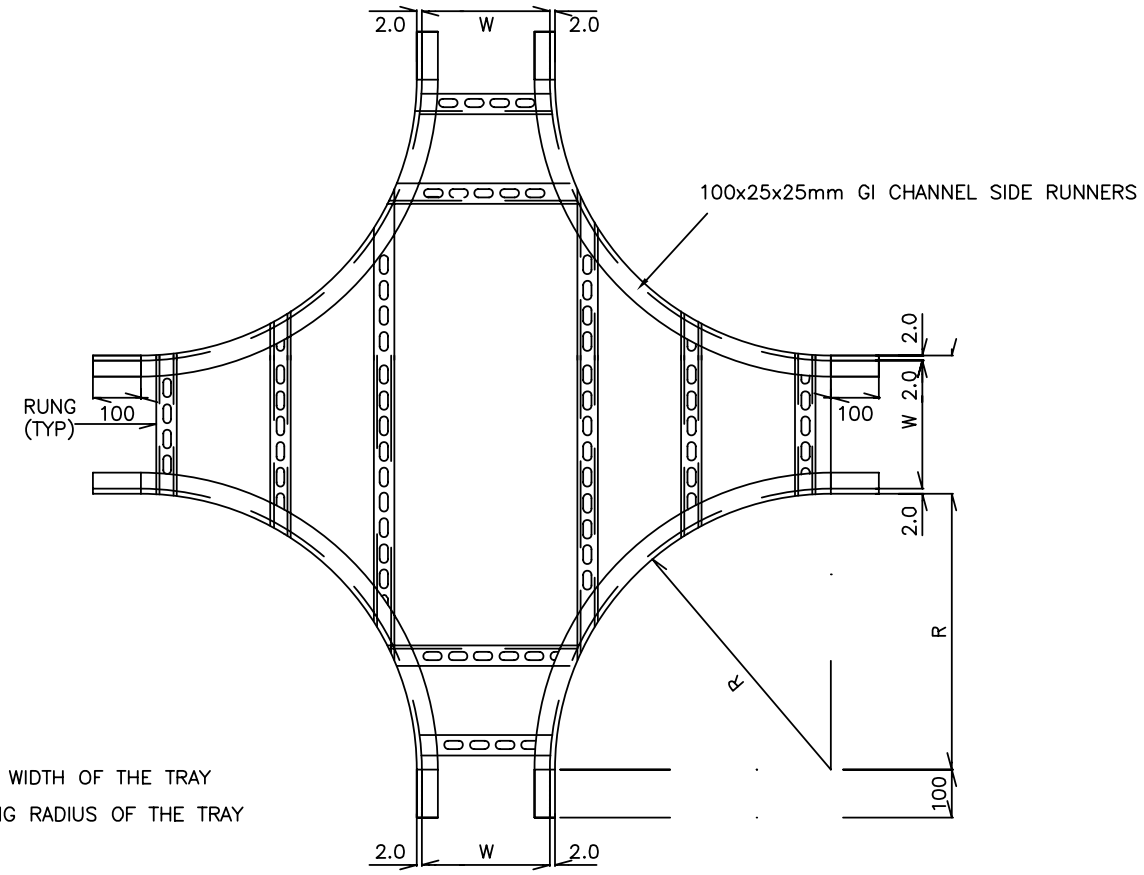

W–INSIDE WIDTH OF THE TRAY

R–BENDING RADIUS OF THE TRAY

NOTES

1. CROSS FOR LADDER TYPE (CHANNEL) CABLE TRAY TYPE1, SHALL INCLUDE 4 SETS OF COUPLER PLATES ALONG WITH ACCESSORIES LIKE NUTS, BOLTS AND WASHERS, AS SHOWN IN THE DRAWING.
2. ALL DIMENSIONS ARE IN mm. NEGATIVE TOLERANCE ON THICKNESS OF CABLE TRAY & ACCESSORIES ARE NOT ACCEPTABLE. HOWEVER TOLERANCE OF ±1% IS ACCEPTABLE ON LENGTH AND WIDTH OF CABLE TRAY & ACCESSORIES.
3. MATERIAL CODES FOR CROSSES WITH ACCESSORIES FOR VARIOUS TYPE OF LADDER TYPE (CHANNEL) CABLE TRAYS–TYPE1, ARE GIVEN IN THE FOLLOWING PAGE.
4. IN ORDER TO MAINTAIN PROPER EARTH CONTINUITY BOND, PAINTING ON SURFACES IN CONTACT BETWEEN COUPLER PLATES AND CABLE TRAY SHALL BE SCRAPPED AT THE TIME OF INSTALLATION.
5. THE DETAILS SHOWN IN THE DRAWING ARE TYPICAL CROSS FOR LADDER TYPE (CHANNEL)–TYPE1 CABLE TRAYS.

COPYRIGHT AND CONFIDENTIAL
The Information on this document is the property of BHARAT HEAVY ELECTRICALS LIMITED.
It must not be used directly or indirectly in any way detrimental to the interest of the company.

RESTRICTED USE

Nov Thu 12 13:00 2020
This Drawing is printed from Engineering Digital Archive System (EDAS).
Therefore signatures are not essentially required.

MATERIAL CODES FOR CROSS CABLE ALONG WITH ACCESSORIES AND COUPLER PLATES FOR LADDER TYPE (CHANNEL) CABLE TRAYS–TYPE1

VAR NO	DESCRIPTION	MATERIAL CODE
82	HORIZONTAL CROSS OF 450 mm BENDING RADIUS ALONG COUPLER PLATES FOR 150 mm WIDTH LADDER TYPE (CHANNEL) CABLE TRAY–TYPE1	HY7433662820
83	HORIZONTAL CROSS OF 600 mm BENDING RADIUS ALONG COUPLER PLATES FOR 150 mm WIDTH LADDER TYPE (CHANNEL) CABLE TRAY–TYPE1	HY7433662839
84	HORIZONTAL CROSS OF 600 mm BENDING RADIUS ALONG COUPLER PLATES FOR 300 mm WIDTH LADDER TYPE (CHANNEL) CABLE TRAY–TYPE1	HY7433662847
85	HORIZONTAL CROSS OF 900 mm BENDING RADIUS ALONG COUPLER PLATES FOR 300 mm WIDTH LADDER TYPE (CHANNEL) CABLE TRAY–TYPE1	HY7433662855
86	HORIZONTAL CROSS OF 600 mm BENDING RADIUS ALONG COUPLER PLATES FOR 450 mm WIDTH LADDER TYPE (CHANNEL) CABLE TRAY–TYPE1	HY7433662863
87	HORIZONTAL CROSS OF 900 mm BENDING RADIUS ALONG COUPLER PLATES FOR 450 mm WIDTH LADDER TYPE (CHANNEL) CABLE TRAY–TYPE1	HY7433662871
88	HORIZONTAL CROSS OF 900 mm BENDING RADIUS ALONG COUPLER PLATES FOR 600 mm WIDTH LADDER TYPE (CHANNEL) CABLE TRAY–TYPE1	HY7433662880
89	HORIZONTAL CROSS OF 1250 mm BENDING RADIUS ALONG COUPLER PLATES FOR 600 mm WIDTH LADDER TYPE (CHANNEL) CABLE TRAY–TYPE1	HY7433662898
90	HORIZONTAL CROSS OF 1500 mm BENDING RADIUS ALONG COUPLER PLATES FOR 600 mm WIDTH LADDER TYPE (CHANNEL) CABLE TRAY–TYPE1	HY7433662901
91	HORIZONTAL CROSS OF 900 mm BENDING RADIUS ALONG COUPLER PLATES FOR 750 mm WIDTH LADDER TYPE (CHANNEL) CABLE TRAY–TYPE1	HY7433662910
92	HORIZONTAL CROSS OF 1250 mm BENDING RADIUS ALONG COUPLER PLATES FOR 750 mm WIDTH LADDER TYPE (CHANNEL) CABLE TRAY–TYPE1	HY7433662928
93	HORIZONTAL CROSS OF 1500 mm BENDING RADIUS ALONG COUPLER PLATES FOR 750 mm WIDTH LADDER TYPE (CHANNEL) CABLE TRAY–TYPE1	HY7433662936

COPYRIGHT AND CONFIDENTIAL
The Information on this document is the property of BHARAT HEAVY ELECTRICALS LIMITED.
It must not be used directly or indirectly in any way detrimental to the interest of the company.

RESTRICTED USE

Nov Thu 12 13:00 2020
This Drawing is printed from Engineering Digital Archive System (EDAS).
Therefore signatures are not essentially required.

VOLUME - II: TECHNICAL SECTION

3 - MRPL ENGINEERING DESIGN BASIS

TABLE OF CONTENTS

3.1. Design Basis for Surface Preparation and Protective Coating

3.2 Specification for Fabrication and Erection of Piping

3.3 Standard Specification for Non Destructive Examination Requirements of Piping

3.4 Technical Notes for Pipes

3.5 Technical Notes for Valves

3.6 Technical Notes for Fittings

3.7 Technical Notes for Flanges, Spectacle Blinds and Drip Rings

3.8 Technical Notes for Fasteners

3.9 Technical Notes for Gaskets

3.10 Specification for Fabrication and Erection of Underground Piping

3.11 Standard Specification for Hot Insulation of Vessels, Piping and Equipment's

3.12 Design Basis for Safety Requirements

MRPL Engineering Design Basis For Surface Preparation and Protective Coating (NEW CONSTRUCTION)

Rev. No	Date	Purpose
0	04/06/16	Issued for Design

Abbreviations:

AS	Alloy Steel
CS	Carbon Steel
DFT	Dry Film Thickness
DM	De-mineralized
GI	Galvanized Iron
ID	Internal Diameter
IRN	Inspection Release Note
LTCS	Low Temperature Carbon Steel
MS	Mild Steel
NB	Nominal Bore
OD	Outside Diameter
RCC	Reinforced Cement Concrete
SS	Stainless Steel
TSAC	Thermally Sprayed Aluminium Coating
WFT	Wet Film Thickness

CONTENTS

DESCRIPTION PAGE NO.

1. General..... 4
2. Scope..... 4
3. Reference Codes & Standards..... 6
4. Equipment..... 7
5. Surface Preparation, Shop Primer. Coating Application & Repair and Documentation. 7
6. Paint Materials..... 16
7. Coating Systems..... 21
8. Coating System for Gratings, Rolling & Stationery Ladders, Spiral Stairways and Hand Rails in All location..... 23
9. Coating System for Offsite Area (Inland Plants)..... 24
10. Coating System for Unit Areas as well as DM, CPP, Cooling Tower of Inland Plants and for All Areas (Unit, Offsite, DM, CPP, etc.) of Coastal Plants..... 25
11. Coating System for Effluent Treatment Plant (ETP)..... 27
12. External Coating Systems for Uninsulated Carbon Steel and Low Alloy Steel Storage Tanks (For All Plant Locations, Coastal or Inland) –All Process Units & Off-Sites. 28
13. Internal Coating Systems for Carbon Steel and Low Alloy Storage Tanks – All Process Units & Off-Sites..... 30
14. Coating Systems for External Side of Underground Carbon Steel Plant Piping and Underground Vessels..... 32
15. Coating Under Insulation (Coastal or Inland Plants).All Units Areas & Off-Sites. 33
16. Coating System for Carbon Steel Components of Coolers I Condensers (Internal Protection) for Fresh Water Service..... 34
17. Coating System (Internal Protection) for Galvanized or Non Ferrous or Stainless Steel/ Duplex Stainless Steel Components of Coolers/ Condensers for Fresh Water Service..... 35
18. Storage..... 35
19. Colour Code..... 35
20. Identification of Vessels, Piping etc..... 42
21. Painting for Civil Defence Requirements..... 42
22. Quality Control, Inspection and Testing..... 42
23. Guarantee 46
24. Qualification Criteria of Painting Contractor/Sub-Contractor..... 46
25. Qualification/Acceptance Criteria for Paint Coating System..... 46
26. Method of Sampling & Dispatch for Laboratory Testing..... 48

Annexure-I Specification for TSAC 50

1.0 GENERAL

1.1 This technical specifications shall be applicable for the work covered by the contract, and without prejudice to the provisions of various international codes of practice, standard specifications etc. It is understood that contractor shall carry out the work in all respects with the best quality of materials and workmanship and in accordance with the best engineering practice and instructions of Engineer-In-Charge.

1.2 Wherever it is stated in the specification that a specific material is to be supplied or a specific work is to be done, it shall be deemed that the same shall be supplied or carried out by the contractor.

Any deviation from this standard without written deviation permit from appropriate authority will result in rejection of job.

1.3 This specification covers the requirement for protective coating for new construction.

2.0 SCOPE

2.1 Scope of work covered in the specification shall include, without being limited to the following.

2.1.1 This specification defines the requirements for surface preparation, selection and application of primers and paints on external surfaces of equipment, vessels, machinery, piping, ducts, steel structures, external & internal protection of storage tanks for all services and chimneys if any. The items listed in the heading of tables of paint systems is indicative only, however, the contractor is fully responsible for carrying out all the necessary painting, coating and lining on external and internal surfaces as per the tender requirement.

2.2 Extent of Work

2.2.1 The following surfaces and materials shall require shop, pre-erection and field painting:

- All uninsulated Carbon Steel & Alloy Steel equipments like vessels, Columns, Storage Tanks, Exchangers if any, parts of boilers etc.

- All uninsulated carbon steel and low alloy plant and related piping, fittings and valves (including painting of identification marks), furnace ducts and stacks.

- All insulated parts of vessels, boilers, chimneys, stacks, piping and steam piping and if any other insulated items present.
- All items contained in a package unit as necessary.
- All structural steel work, pipe, structural steel supports, walkways, handrails, ladders, platforms etc.

- Flare lines, external surfaces of MS chimney with or without refractory lining and internal surfaces of MS chimney without refractory lining. (If present)

- Identification of color bands on all piping as required including insulated aluminum clad, galvanized, SS and nonferrous piping.

- Identification lettering/ numbering on all painted surfaces of equipment/piping insulated aluminum clad, galvanized, SS and non-ferrous piping.

- Marking Me identification signs on painted surfaces of equipment/piping including hazardous service.

- Supply of all primers, paints and all other materials required for painting (other than Owner supplied materials)

- Over insulation surface of equipments and pipes wherever required.

- Painting under insulation for carbon steel, alloy steel and stainless steel as specified.

- Painting of pre-erection/fabrication and Shop primer.

- Repair work of damaged pre-erection/ fabrication and shop primer and weld joints in the field/site before and after erection as required.

- All CS Piping, equipments, storage tanks and internal surfaces of RCC tanks in ETP plant.

- Quality control, testing and inspection during all stages of work (surface preparation, application of coating and testing of furnished coating) **along with the Involvement of Paint Manufacturer.**

2.2.2 The following surfaces and materials shall not require painting in general. However, if there is any specific requirement by the owner, the same shall be painted as per the relevant specifications:

a. Uninsulated austenitic stainless steel.
b. Plastic and/or plastic coated materials
c. Non-ferrous materials like aluminum, Cu-Ni alloy, galvanized steel.

2.3 Documents

2.3.1 The contractor shall perform the work in accordance with the following documents issued to him for execution of work.

a. Bill of quantities for piping, equipment, machinery and structures etc
b. Piping Line List.

2.4 Unless otherwise instructed, final paint coating (i.e., application of field primer, wherever required, intermediate and top coats) on pre-erection/ shop primed equipments shall be applied at site, only after all welding, testing on systems are completed as well as after completion of steam purging wherever required.

2.5 Changes and deviations required for any specific job due to clients requirement or otherwise shall be referred to MRPL for deviation permit.

3.0 REFERENCE CODES & STANDARDS

3.1 Without prejudice to the provision of Clause 1.1 above and the detailed specifications of the contract, latest editions of the following codes and standards are applicable for the work covered by this contract.

IS-5	Color coding
RALDUTCH	International Standard for color shade (Dutch Standard)
IS-101	Methods of test for ready mixed paints and enamels
IS-2379	Indian Standard for Pipe line identification-color code
IS0-12944	Corrosion Protection of steel Structures by Protective Paint System
ASTM-Vol6.01&6.03	American standard test methods for Paints and Coatings.
ANSI A 13.l	Scheme for identification of piping systems: American National Standards Institution
SSPC	Steel Structures Painting Council

3.2 Surface Preparation Standards

The latest editions of any of the following standards shall be followed for surface preparation:

3.2.1 ISO 8501-1/SIS-0559 00: ISO standard for Preparation of steel substrates before application of paints and related products. This standard contains photographs of the various standards on four different degrees of rusted steel and as such is preferable for inspection purpose by the Engineer-In-Charge.

3.2.2 Steel Structures Painting Council, U.S.A. (Surface Preparation Specifications (SSPC-SP).

3.2.3 National Association of Corrosion Engineers, U.S.A., (NACE).

3.2.4 Various International Standards equivalent to Swedish Standard for surface preparations are given in Table-I.

3.3 The contractor shall arrange, at his own cost, to keep a set of latest edition of above standards and codes at site.

3.4 The paint manufacturer's instructions shall be followed as far as practicable at all times for best results. Particular attention shall be paid to the following:

a. Instructions for storage to avoid exposure as well as extremes of temperature.

b. Surface preparation prior to painting shall be followed as per Table 8.0 to 16.0 of this standard shall be followed.

c. Mixing and thinning.

d. Application of paints and recommended limit on time intervals in between coats.

4.0 EQUIPMENT

4.1 All tools, brushes, rollers, spray guns, blast material, hand power tools for cleaning and all equipments, scaffolding materials, shot & grit blasting equipments & air compressors etc. required to be used shall be suitable for the work and all in good order and shall be arranged by the contractor at site and in sufficient quantity. The manufacturer's test certificates I data sheets for all the above items shall be reviewed by Engineer-in-charge at site before start of work.

4.2 Mechanical mixer shall be used for paint mixing operations in case of two pack systems except that the Engineer-In-Charge may allow the hand mixing of small quantities at his discretion in case of specific requirement for touch up work only.

5.0 SURFACE PREPARATION, SHOP PRIMER COATING APPLICATION & REPAIR AND DOCUMENTATION

5.1 General

5. 1.1 In order to achieve the maximum durability, one or more of following methods of surface preparation shall be followed, depending on condition of surface to be painted and as instructed by Engineer-In-Charge. Adhesion of the paint film to surface depends largely on the degree of cleanliness of the metal surface. Proper surface preparation contributes more to the success of the paint protective system.

a. Abrasive blast cleaning

b. Mechanical or power tool cleaning

5.1.2 Mill scale, rust, rust scale and foreign matter shall be removed fully to ensure that a clean and dry surface is obtained. Unless otherwise specified, surface preparation shall be done as per provisions of relevant tables given elsewhere in this specification. The minimum acceptable standard, in case of thermally sprayed metal coatings, in case of mechanical or power tool cleaning it shall be St. 3 or equivalent. In case of blast cleaning it shall be Sa 2-1/2 as per Swedish Standard SIS-055900 (latest edition) or SSPC-SP or ISO 8501-01.Blast cleaning shall be Sa 3 as per Swedish Standard in case thermally sprayed metal coatings.

Before surface preparation by blast cleaning, the surface shall be degreased by aromatic solvent to remove all grease, oil etc.

5.1.3 Irrespective of whether external or internal surface to be coated, blast cleaning shall not be performed where dust can contaminate surfaces undergoing such cleaning or during humid weather conditions having humidity exceed 85%. In case of internal coating of storage tanks, dehumidifier shall be used, to control humidity level below 60%. Dehumidifier should depress the dew point of air in the enclosed space, sufficient enough so as to maintain it 3°C below the metal substrate temperature during centre period of blasting and coating application. During the interval time between application of primer coat and subsequent intermediate and top coats or between blast cleaning completion and start of application of primer coat, dehumidifier unit should be in continuous operation to ensure that no condensation occurs on substrate.

Dehumidifier should be able to maintain grain drop (moisture removal) at the rate of 25 grains per pound of air per hour. Dehumidifier should have capacity of at least 2 air changes per hour of the enclosed space. All necessary psychometric data should be collected by contractor for the given site conditions before starting operation of

dehumidifier to ensure that desired values of dew point, moisture content in enclosed scope is achieved.

Dehumidification to be maintained round the clock for surface preparation and painting till the total coating application is over.

Dehumidifier shall not be stopped under any condition till the entire blasted surface is primed to the satisfaction of the technical representative of the paint manufacturer interested with quality assurance for the work. In case the dehumidifier breaks down in middle of the job, the same shall be replaced at the risk and the cost of the contractor and the entire unfinished work shall be repeated.

5.1.4 The Engineer in-charge shall have the right to disallow usage of dehumidifier if the performance is not meeting the specified requirements. Under such circumstances the contractor shall remove the equipment and replace the same with another equipment to provide satisfactory results without any additional cost to the owner.

5.1.5 Irrespective of the method of surface preparation, the first coat of primer must be applied by airless spray/ air assisted conventional spray if recommended by the paint manufacturer on dry surface. This should be done immediately and in any case within 4 hours of cleaning of surface. However, at times of unfavorable weather conditions, the Engineer-In-Charge shall have the liberty to control the time period, at his sole discretion and/or to insist on re• cleaning, as may be required, before primer application is taken up. In general, during unfavorable weather conditions, blasting and painting shall be avoided as far as practicable.

5.1.6 The external surface of R.C.C. Chimney to be painted shall be dry and clean. Any loose particle of sand, cement, aggregate etc. shall be removed by scrubbing with soft wire brush. Acid etching with 10-15% HCL solution for about 15 minutes shall be carried and surface must be thoroughly washed with water to remove acid & loose particles and then dried completely before application of paint.

5.2 Procedure for Surface Preparation

5.2.1 Air Blast cleaning with abrasives

The surfaces shall be blast cleaned using one of the abrasives like angular chilled cast iron or steel grit, copper slag or Nickel slag, A1203 particles at pressure of 7kg/cm2 at an appropriate distance and angle depending of nozzle size maintaining constant velocity and pressure. Chilled cast iron or steel shall be in the form of shot or grit of size in the range of G 16 - G42 conforming to SSPC AB 1 and 8250 grade size of steel shots (maximum) to obtain a desired surface profile of 35-50 microns trough to peak. For all other abrasives, size shall be in the range of G 16 - G24. The combination

of steel grits and shots shall be normally in the ratio of 3: 1. The quality of abrasives shall be free from contaminants and impurities and shall meet the requirements of SSPC AB 1. Compressed air shall be free from moisture and oil. The blasting nozzles should be venture style with tungsten carbide or boron carbide as the materials for liners. Nozzles orifice may vary from 3/16" to: Y..." On completion of blasting operation, the blasted surface shall be clean and free from any scale or rust and must show a grey white metallic luster. Primer/first coat of paint shall be applied within 4 hours of surface preparation. Blast cleaning shall not be done outdoors in bad weather without adequate protection or when there is dew on the metal, which is to be cleaned. Surface profile shall be uniform to provide good key to the paint adhesion (i.e. 35 to SO microns). If possible vacuum collector shall be installed for collecting the abrasives and recycling.

5.2.2 Mechanical or Power Tool Cleaning

Power tool cleaning shall be done by mechanical striking tools, chipping hammers, grinding wheels or rotating steel wire- brushes. Excessive burnish of surface shall be avoided as it can reduce paint adhesion. On completion of cleaning, the detached rust mill scale etc. shall be removed by clean rags and /or washed by water or steam and thoroughly dried with compressed air jet before application of paint.

5.3 Non-Compatible Shop Coat Primer

For equipments on which application of total protective coating (Primer + Intermediate + top coat) is carried out at shop, compatibility of finish coat with primer should be checked with paint manufacturer. If the shop coat is in satisfactory condition showing no major defect upon arrival at site, the shop coat shall not be removed.

5.4 Shop coated equipments (coated with Primer & finishing coat) should not be repainted unless paint is damaged. Repair shall be carried out as per Table 7 .2 of paint systems depending upon compatibility of paint.

5.5 Shop primed equipment and surfaces will only be 'spot cleaned' in damaged areas by means of power tool brush cleaning or hand tool cleaning and then spot primed before applying one coat of field primer unless otherwise specified. If shop primer is not compatible with field primer then shop coated primer should be completely removed before application of selected paint system for particular environment.

5.6 For Package units/equipment, shop primer should be as per the paint system given in this specification. However, manufacturer's standard can be followed after review.

As mentioned in section 2.4, all coating application at field (field primer, intermediate and top coat) on equipments, structures, piping, etc, shall be carried out only after its

erection and all welding, testing, steam purging (wherever carried out) have been completed.

5.7 Coating Procedure and Application

All paint coatings shall be applied by airless spray excepting at the following special cases where application can be carried out by brush subject to suitability of the application of the paint product by brush.

- Spot repair
- Stripe coating on edges
- Small bore parts not suitable for spray application.

Irregular surfaces such as sharp edges, welds, small brackets, and interstices may stripe coated to ensure specified DFT is achieved. Paint manufacturer recommendation should be followed before deciding for brush application.

5.7.1 Surface shall not be coated in rain, wind or in environment where injurious airborne elements exists, when the steel surface temperature is less than 5°F above dew point when the relative humidity is greater than 85% or when the temperature is below 40°F and when the ambient/substrate temp is below the paint manufacturer's recommended temperature of application and curing. De-humidifier equipment shall be used to control RH and Dew point. The paint application shall not be done when the wind speed exceeds 20km per hour.

5.7.2 Blast cleaned surface shall be coated with one complete application of primer as soon as practicable but in no case later than 4 hrs the same day.

5.7.3 To the maximum extent practicable, each coat of material shall be applied as a continuous film uniform thickness free of probes. Any spots or areas missed in application shall be recoated and permitted to dry before the next coat is applied. Applied paint should have the desired wet film thickness.

5.7.4 Each coat shall be in proper state of cure or dryness before the application of succeeding coat. Material shall be considered dry for recoating when an additional coat can be applied without the development of any detrimental film irregularities, such as lifting or loss of adhesion of the under coat. Manufacturer instruction shall be followed for inter coat interval.

5.7.5 When the successive coat of the same color have been specified, alternate coat shall be tinted, when practical, sufficiently to produce enough contrast to indicate complete coverage of the surface. The tinting material shall be compatible with the material and not detrimental to its service life and shall be recommended by the original paint manufacturer.

5.7.6 Airless spray application shall be in accordance with the following procedure: as per steel structure paint Manual Vol.1 & Vol.2 by SSPC, USA, Air less spray relies on hydraulic pressure rather than air atomization to produce the desired spray. An air compressor or electric motor issued to operate a pump to produce pressures of 1000 to 6000 psi. Paint is delivered to the spray gun at this pressure through a single hose within the gun; a single paint stream is divided into separate streams, which are forced through a small orifice resulting in atomization of paint without the use of air. This results in more rapid coverage with less over spray. Airless spray usually is faster, cleaner, more economical and easier to use than conventional air spray.

Airless spray equipment is mounted on wheels, and paint is aspirated in a hose that sucks paint from any container, including drums. The unit shall have in built agitator that keep the paint uniformly mixed during the spraying. The unit shall consist of in built strainer. Usually very small quantity of thinning is required before spray. In case of high build epoxy coating (two packs). 30:1 pump ratio and 0.020-0.023" tip size will provide a good spray pattern. Ideally fluid hoses should not be less than 3/8" ID and not longer than 50 ft to obtain optimum results.

In case of gun choking, de-choking steps shall be followed immediately.

5.7.7 Brush application of paint shall be in accordance with the following:

a. Brushes shall be of a style and quality that will enable proper application of paint.

b. Round or oval brushes are most suitable for rivets, bolts, irregular surface, and rough or pitted steel. Wide flat brushes are suitable for large flat areas, but they shall not have width over five inches.

c. Paint shall be applied into all comers.
d. Any runs or sags shall be brushed out.
e. There shall be a minimum of brush marks left in the applied paint.

f. Surfaces not accessible to brushes shall be painted by spray, daubers, or sheepskin.

5.7.8 For each coat the painter should know the WFT corresponding to the specified OFT and standardize the paint application technique to achieve the desired WFT. This has to be ensured in the qualification trial.

5.8 Drying of Coated Surfaces

5.8.1 No coat shall be applied until the preceding coat has dried. The material shall be considered dry for re-coating when another coat can be applied without the development of any film irregularities such as lifting or loss of adhesion of undercoats.

Drying time of the applied coat should not exceed maximum specified for it as a first coat; if it exceeds the paint material has possibly deteriorated or maxing is faulty.

5.8.2 No paint shall be force dried under conditions which will cause chalking, wrinkling, blistering formation of pores, or detrimentally affect the conditions of the paint.

5.8.3 No drier shall be added to paint on the job unless specifically called for in the manufacturer's specification for the paint.

5.8.4 Paint shall be protected from rain, condensation, contamination, snow and freezing until dry to the fullest extent practicable.

5.9 Spot Repair of Damaged Primer

5.9.1 Where pre erection shop primer has been damaged at isolated localized spots during handling and transportation, or after erection I welding, the repair of damaged coating of pre-erection I pre-fabrication or shop primer shall be done as given below and as per the Table 7.2 of this specification.

5.9.2 Repair of damaged inorganic zinc silicate pre-erection I pre-fabrication or shop primer (F9) after erection I welding in the design temperature of -90°C to 400°C and damaged silicone aluminum (F-12) pre-erection I pre-fabrication or shop primer after erection I welding for design temperature range of 401 - 550 °C.

Surface Preparation: Quickly remove the primer from damaged area by mechanical scraping and emery paper conforming to SSPC-SP-3 to expose the white metal. Blasts clean the surface, if possible. Feather the primed surface over the intact adjacent surface surrounding the damaged area by emery paper.

Primer coating: One coat of F-9 shall be applied wherever damage was observed on pre• erection I pre fabrication or shop primer of inorganic zinc silicate coating (F-9). Similarly one coat of F-12 shall be applied wherever damage observed on pre-erection I pre• fabrication shop primer of silicone aluminum (F-12).

5.9.3 Wherever if damaged areas are found extensive and spread over large areas, then entire pre-erection I pre-fabrication or shop primer shall be removed by blasting to achieve SSPC-SP-10 then entire blasted surface shall be primed again with F-9 or F-12 as applicable for the intended design temp. (See note under table 7.2).

5.10 Paint Application

5.10.1 Shop priming/pre-erection priming with F9 or F 12 shall be done only on blasted Surface (SSPC-SP-10)

5.10.2 Shop priming I pre-erection priming with F9 or F12 shall be done only with airless spray.

5.10.3 Assessment of Painting Requirement

The paint system to be applied for a specific job shall be arrived at sequentially as given below:

- Identify the environment from area classification details and chose the appropriate table.
- Identify the design temperature from the technical documents
- Identify the specific field paint system and surface preparation requirement from the above identified table and temperature range.
- Identify the shop priming requirement from Table 7.1 based on compatibility of the above paint system.
- Identify the need of repair of shop primer and execute as per Table 7 .2.

5.11 Documentation and Records

5.11.1 A written quality plan with procedure for qualification trials and for the Actual work including test and inspection plan & procedure for approval before start of work.

5.11.2 Daily progress report with details of weather conditions, particu1ar of Applications, no of coats and type of materials applied, anomalies, progress of Work versus program.

5.11.3 Results of measurement of temperatures relative humidity, surface profile, film thickness, holiday detection, adhesion tests with signature of appropriate authority.

5.11.4 Particulars of surface preparation and paint application during trials and during the work.

5.11.5 Details of non-compliance, rejects and repairs.

5.11.6 Type of testing equipments and calibration.

5.11.7 Code and batch numbers of paint materials used.

The coating applicator must maintain a job record consisting of all the information as per 5.11.2 – 5.11.7 above as well as the approved procedure of work (5.11.1 above). The job record consisting of information as required in accordance to 5.11.2 - 5.11.7 shall be entered on daily basis and should be daily signed by Engineer-in-charge.

After completion of the job, along with the final documentation, contractor shall submit the document for the total quantum of job carried out, quantity of paint used area wise / equipment wise. Test certificates, stage wise inspection reports, manufacturer's guarantee certificate, stage wise inspection / witness certificate from paint manufacturer.

TABLE-1 (FOR CLAUSE 5.0)
SURFACE PREPARATION STANDARDS

SI. No.	DESCRIPTION	VARIO US INTERNATIONAL ST AND ARDS (EQUIV ALE NT)			REMARKS
		ISO 8501-1/ SIS-OS 59 00	SSPC-SP, USA	NACE, USA	
1.	Manual or hand tool cleaning Removal of loose rust, loose mill scale and loose paint, chipping, scrapping, standing and wire brushing. Surface should have a faint metallic sheen	ST.2	SSPC-SP-2	--	This method is applied when the surface is exposed to normal atmospheric conditions when other methods cannot be adopted and also for spot cleaning during maintenance painting
2.	Mechanical or power tool cleaning Removal of loose rust loose mill scale and loose paint to degree specified by power tool chipping, de-scaling, sanding, wire brushing and grinding, after removal of dust, surface should have a pronounced metallic sheen.	ST.3	SSPC-SP-3	--	
3.	Dry abrasive Blast cleaning There				

	are four common zrades of blast cleaning				
3.1	White metal Blast cleaning to white metal cleanliness. Removal of all visible rust. Mill scale, paint & foreign matter 100% cleanliness with desired surface profile.	SA3	SSPC-SP-5	NACE #l	Where extremely clean surface can be expected for prolong life of paint system.
3·2	Near white metal Blast cleaning to near white metal cleanliness, until at least 95% of each element of surface area is free of all visible residues with desired surface profile	SA 2\12	SSPC-SP-10	NACE #2	The minimum requirement for chemically resistant paint systems such as epoxy, vinyl, polyurethane based and inorganic zinc silicate paints, also for conventional paint systems used under fairly corrosive conditions to obtain desired life of paint system.
3.3	Commercial Blast Blast cleaning until at least two-third of each element of surface area is free of all visible residues with desired surface profile.	SA2	SSPC-SP-6	N0.3	For steel required to be painted with conventional paints for exposure to mildly corrosive atmosphere for longer life of the paint svstems.
3.4	Brush-off Blast Blast cleaning to white metal cleanliness, removal of all visible rust, mill scale, paint & foreign matter. Surface profile is not so imnortant	SA 1	SSPC-SP-7	N0.4	

6.0 PAINT MATERIALS

Paint manufacturers shall furnish the characteristics of all paints materials on original printed literature, along with the test certificate for all specified characteristics given in this specification. All the paint materials shall be of first quality and conform to the following general characteristics as per the tables 6.1, 6.2, 6.3 and 6.4.

PAINT MATERIALS
TABLE NO.6.1 PRIMERS

SI. No.	DESCRIPTION	P-2	P-4	P-6	P-7
1	Technical name	Chlorinated rubber Zinc Phosphate primer.	Etch primer/ wash primer	Epoxy zinc phosphate primer	ZINGA, LOCKTITE or ZRC cold zalvanizine
2	Type and composition	Single pack, air drying chlorinated rubber based medium plasticised with unsaponifiable plasticizer, pigmented with zinc phosphate.	Two pack polyvinyl butyral resin medium cured with phosphoric acid solution pigmented with zinc tetroxy chromate.	Two component polyamine cured epoxy resin medium, pigmented with zinc phosphate.	One pack Synthetic Resin based zinc galvanizing containing min 92% of electrolytic zinc dust of 99.95% purity.
3	Volume Solids %	40±3	10±1	50±1	37%
4	DFT (Dry Film thickness) per coat in microns	40-45	8-10	40-50	40-50µ
5	Theoritical covering capacity in M2/coat/ litre	8-10	8-10	8-10	4m2/kg
6	Weight per litre in kgs/litre	1.3±0.05	1.2±0.05	1.4±0.05	2.67 kg at 15°C
7	Touch dry at 30°C (minimum)	30 minutes	2 hrs.	After 30 min.	10 minutes
8	Hard dry at 30°C (maximum.)	8 hrs.	24 hrs.	8 hrs	24 hrs.
9	Overcoating interval	Min.: 8 hrs	Min: 4-6 hrs.	Min.:8hrs.	Min.:4 hrs
10	Pot life at 30°C for two component paints	Not Annlicable	Not applicable	6 - 8 hrs.	Unlimited

11	Temperature (Resistance (minimum)	60°C Drv service	NA Drv service	80°C Drv service	50°C Drv service

PAINT MATERIALS
TABLE No. 6.2 FINISH PAINTS

Sl. No.	DESCRIPTION	F-2	F-3	F-6A/B	F-6C	F-7
1	Technical Name	Acrylic Polyurethane Finish paint	Chlorinated rubber based finish paint	Epoxy - High Build coating	Solvent less epoxy coating	High build coal tar epoxy coating
2	Type and composition	Two-pack aliphatic isocynate cured acrylic finish paint	Single pack plasticized chlorinated rubber based medium with chemical and weather resistant pigments.	F-6A Two-pack Aromatic amine cured epoxy resin medium suitably pigmented. F-6B : polyamide cured epoxy resin medium suitably pigmented	Two pack, cured with Amine Adduct; catalyzed epoxy resin suitably pigmented	Two pack polyamide cured epoxy resin blended with coaltar medium, suitably pigmented
3	Volume Solids%	40±3	38±2	60±3	99±1	65±3
4	DFT (Dry Film thickness) per coat in microns	30-40µ	30-40	100-125µ	200-500	100-125µ
5	Theoritical covering capacity in M2/coat/litre	11-15	11-15	5-6	2-3	5.2-6.5
6	Weight per liter in kags/litre	1.15±0.03	1.15±0.03	1.42±0.03	1.40±0.03	1.40±0.03
7	Touch drv at 30°C	30 minutes	30 minutes.	3 hrs.	3 hrs.	4 hrs.
8	Hard dry at 30°C Full cure at 30°C (for immersion/ high	8 hrs	8 hrs	16 Hrs 5 days	16 hrs	48 hrs 5 days
9	Over-coating interval at 30ºC	30 minutes	30 minutes	3 hrs.	3 hrs.	4 hrs.
10	Pot life (approx.) at 30ºC for two component paints	6-8 hrs.	Not applicable	4-6 hrs	30 minutes	4-6 hrs.
11	Temperature Resistance (minimum)	80ºC Dry service min	60ºC Immersion service	80ºC Dry service	120ºC (Dry service), 50ºC (Immersio n service)	125ºC Immersion service

PAINT MATERIALS
TABLE No.6.3 FINISH PAINTS

Sl. No.	DESCRIPTION	F-8	F-9	F-11	F-12
1	Technical name	Self priming type surface tolerant high build epoxy coating (complete rust control coating)	Inorganic zinc silicate coating	Heat resistant synthetic medium based two pack Aluminium paint suitable upto 250ºC dry temp	Heat resistant silicone Aluminium paint suitable upto 500ºC dry temp
2	Type & composition	Two pack epoxy resin based suitable pigmented and capable of adhering to manually prepared surface and old coating	A two pack air drying self curing solvent based inorganic zinc silicate coating with minimum 80% zine content on dry film. The final cure of the dry film shall pass the MEK rub test	Heat resistant synthetic medium based two pack Aluminium paint suitable upto 250ºC	Single pack silicone resin based medium with Aluminium flakes
3	Volume Solids	78+3	60+3	38+0.03	20+2
4	DFT (Dry Film thickness) per coat in microns	100-125	65-75	15-20	15-20
5	Theoretical covering capacity in M^2/coat/litre	6.0-7.2	8-9	10-12	8-10
6	Weight per liter in kgs/litre	1.41+0.03	2.3+0.03	0.95+0.03	1.00+0.03
7	Touch dry at 30ºC (maximum)	3 hrs.	30 minutes	3 hrs.	30 minutes
8	Hard dry at 30ºC (maximum) Full cure 30ºC (for immersion/high temperature service)	24 hrs 5 days	12 NA	12 NA	24 hrs NA

9	Over-coating interval	Min. : 10 hrs	Min. : 12 hrs. at 20ºC & 50% RH	Min. 24 hrs	Min.:24 hrs
10	Pot life at 30ºC for two component paints	90 minutes	4-6 hrs.	Not applicable	Not applicable
11	Temperature Resistance (minimum)	80ºC Dry service	400ºC Dry service	250ºC Dry service	500ºC Dry service

PAINT MATERIALS
TABLE No.6.4 FINISH PAINTS

Sl. No.	DESCRIPTION	F-14	F-15	F-16	F-17
1	Technical name	Polyamine cured coal tar epoxy	Two-component Epoxy phenolic coating cured with Polyamine adduct hardner system (primer + intermediate coat + finish paint)	Ambient temperature curing Poly Siloxane coating/High build cold applied inorganic copolymer based aluminium coating suitable for under insulation coating of CS and SS piping for high temperature service	Two component solvent free type high build epoxy phenolic/novalac epoxy phenolic coating cured with Polyamine adduct hardner system
2	Type & composition	Specially formulated polyamine cured coal tar epoxy suitable for application under insulation	Two pack ambient temperature curing epoxy phenolic coating system suitable for application under insulation of CS/SS piping	Amercoat 738 from PPG Protective & Marine Coatings or Intertherm 751 CSA of International (Akzo Nobel). Note : 6	Two component solvent free type high build epoxy phenolic/novalac epoxy phenolic coating cured with Polyamine adduct hardner system
3	Volume Solids %	70+3	70+3	60+2	98-100
4	DFT (Dry Film thickness) per coat in microns	100-125	75-100	75-100	125-150

5	Theoretical covering capacity in M^2/coat/litre	5-8	4-5	7.0-9.0	6.5-8
6	Weight per liter in kgs/litre (mix paint)	1.45+0.03	1.65+0.03	1.3	1.7
7	Touch dry at 30ºC (maximum)	4 hrs.	3 hrs	1 hr	2 hrs
8	Hard dry at 30ºC (maximum) Full cure 30ºC (for immersion/high temperature service)	24 hrs 168 hrs (7 days)	24 hrs 168 hrs (7 days)	16 hrs	24 hrs 168 hrs (7 days)
9	Over-coating interval	Min. : 6 hrs Max. 5 days	Min. : 36 hrs. Max. 21 days	Min. 16 hrs Max. Not applicable	Min.: 16 hrs Max. : 21 days
10	Pot life at 30ºC for two component paints	4 hrs	4-6 hrs.	1 hr	1 hr
11	Temperature Resistance	-45ºC to 125ºC under insulation and immersion	-45ºC to 150ºC under insulation & immersion (Note : 5)	a) upto 400ºC for C. Steel & S. Steel for Intertherm 751 CSA b) upto 480ºC for C. Steel & upto 600ºC for S. Steel for Amercoat 738	-45ºC to 150ºC for immersion service

NOTES (for tables 6.1 to 6.4):

1. Covering capacity and DFT depends on method of application. Covering capacity specified above is theoretical. Allowing the losses during application, min specified OFT should be maintained.

2. All primers and finish coats should be cold cured and air drying unless otherwise specified.

3. All paints shall be applied in accordance with manufacturer's instructions for surface preparation, intervals, curing and application. The surface preparation, quality and workmanship should be ensured. In case of conflict between this specification and manufacturer's recommendation, the same shall be clarified through EIL SMMS department.

4. Technical data sheets for all paints shall be supplied at the time of submission of quotations.

5. F-15: Two-component Epoxy phenolic coating cured with Polyamine adduct hardener system (primer + intermediate coat + finish paint) suitable up to 225°C (Intertherm 228 from M/s Akzo Nobel Coatings India Pvt Ltd. Bangalore). For all other companies, the temperature resistance shall be a maximum of l 50°C.

6. F- 16: Ambient temperature curing epoxy poly siloxane Coating or high build cold applied inorganic co-polymer based aluminum coating.

   Amercoat 738 from PPG Protective & Marine coatings. Mumbai, is suitable up to 480°C for CS surfaces and 600°C for SS surfaces.

   Intertherm 751 from Akzo Nobel Coatings India Pvt Ltd. Bangalore, Inorganic co-polymer cold applied Aluminum spray coating is suitable up to 400°C of CS & SS surfaces

7.0 COATING SYSTEMS

The coating system should be selected based on the Plant location as given below:

Classification based on Plant Location:

a. **Plant located in Inland area (more than 50 km from coast);**
   Environment Classification - Industrial

   - For offsite areas: Table 9.0 to be followed
   - For all unit areas including DM.CPP and Cooling Tower: Table 10.0 to be followed

b. **Plant located on sea coast or within 50 km from sea coast;**
   Environment classification- Industrial marine

   - For offsite area, as well as all unit area including DM, CPP, Cooling Tower: Table 10.0 to be followed

c. **For external surface of above ground tanks, table 12.0 to be followed for all locations (Inland or coastal)**

<u>NOTES:</u>

1. Coating systems (Primers, Finish Paints etc.) based on

Area classification/environments/Applications are tabulated in Table 8.0 to Table 17.0

2. Primers & Finish paints covered in Tables 8.0 to 17.0 are listed in Table 7.1.

3. Repair of Pre-Erection/Pre-Fabrication & Shop priming after erection/ welding shall be done as per Table 7.2.

TABLE 7.1 : LIST OF PRIMERS & FINISH COATS COVERED IN TABLE NOS. 8 TO 18.0

PRIMERS	
P-2	Chlorinated rubber zinc Phosphate Primer
P-4	Etch Primer/Wash Primer
P-6	Two component Epoxy Zinc Phosphate Primer cured with polyamine hardner
P-7	Single pack, cold galvanizing compounds containing minimum 92% electrolytie zinc in dry film. Make ZINGA, LOCKTITE (of HENKEL) or ZRC
FINISH COATS / PAINTS	
F-2	Two component Acrylic – Polyurethane finish paint
F-3	Chlorinated Rubber finish paint
F-6A	High Build Epoxy finish coating cured with polyamine hardener
F-6B	High Build Epoxy finish coating cured with polyamine hardener
F-6C	Solvent less Epoxy Coating cured with poly amine hardener
F-7	High build Coal Tar epoxy coating cured with polyamine hardener
F-8	Self priming surface Tolerant High Build epoxy coating, cured with polyamine hardener
F-9	Two component Inorganic Zinc Silicate coating
F-11	Heat resistant synthetic medium based Aluminium paint
F-12	Two component Heat resistant Silicone Aluminium paint
F-14	Specially formulated coal tar epoxy coating, cured with polyamine hardener
F-15	Two component Epoxy phenolic coating cured with Polyamine adduct hardener system

F-16	Engineered Epoxy poly Siloxane Coating or high build cold applied inorganic co-polymer based aluminium coating
F-17	Two component solvent free type high build epoxy phenolic/novalac epoxy phenolic coating cured with Polyamine adduct hardener system

TABLE 7.2 REPAIR OF PRE-ERECTON/PRE-FABRICATION OR SHOP PRIMER AFTER ERECTION/WELDING

For all un-insulated CS, LTCS & low allow steel items in all Environments

Sl. No.	Design Temp. in °C	Surface Preparation	Coating System	Total DFT in Microns (min.)	Remarks
7.2.1	-90 to 400	SSPC-Sp-3	1 coat of F-9	65-75	See note below and clause 5.9.3

NOTES:

1. The application and repair of pre-erection/pre-fabrication or Shop Primer given in above tables shall be done for all the items to be painted. In case the damages of primer are severe and spread over large area. entire primer shall be removed by blasting to achieve SSPC-SP-10 and surfaces to be primed again with F-9 or F-12 as applicable.

TABLE 8.0 COATING SYSTEMS FOR GRATINGS, ROLLING & STATIONERY LADDERS, SPIRAL STAIRWAYS AND HAND RAILS IN ALL LOCATION

Sl. No.	Design Temp. in °C	Coating System	Total DFT in Microns (min.)
8.1	Up to 60	Hot Dip Galvanizing to 80-85 microns (600-610 gm/m2) as per IS 4759, 2629, 4736, 2633 + 1 coat of P-6 @ 40 DFT/coat + 1 coat of F-2 @ 40 microns DFT/coat	80 microns of finish coat (excluding the thickness of galvanizing)

NOTES:

1. No galvanized specimen shall have thickness less than 80 microns.
2. Repair of the damaged area of galvanized coatings due to welding during erection shall be carried out as per recommended practice IS 11759 using cold galvanizing spray process. Organic Paint systems are not acceptable for repair.
3. After repair of damaged galvanized coating by Cold Galvanized, the repaired area shall be top coated with paint system as given in Table 8.0 above (i.e., 1 coat of P-6 @ 40µ DFT/coat + 1 coat of F-2 @40µ OFT/coat).
4. Approved Cold Galvanizing manufacturers are ZINGA, LOCKTITE or Z.R.C.

TABLE 9.0 COATING SYSTEMS FOR OFFSITE AREA (INLAND PLANTS)

For external surfaces of Un-insulated & above ground (atmospheric exposure) Structures, Piping, Vessels, Equipments, Pumps, etc. (Note-1); (For Carbon Steel, LTCS & Low Alloy Steel). See Note Below*

Sl. No.	Design Temp in °C	Surface Preparation & Pre-erection/Shop Primer	Coating System (Post-erection/Field)		Total Final DFT in Microns (min.)	Remarks
			Primer	Finish Coat		
9.1	-90 to -15	SSPC-Sp-10; 1 coat of F-9 @ 65-75 DFT/coat	None	None	65-75	No over-coating to be done on F-9 as it will lead to mud cracking.
9.2	-14 to 60	SSPC-SP-10; 1 coat of F-9 @ 65-75 DFT/coat	None	1coat of F-2 @ 40 DFT/coat	105.115	
9.3	61 to 80	SSPC-SP-10; 1 coat of F-9 @ 65-75 DFT/coat	None	1 coat of F-2 @ 40 DFT/coat	105-115	
9.4	81 to 250	SSPC-SP-10; 1 coat of F-9 @ 65-75 DFT/coat	None	2 coats of F-11 @ 20 DFT/coat; (2x20=40)	105	
9.5	251-400	SSPC-SP-10; 1 coat of F-9 @ 65-75 DFT/coat	None	2 coats of F-12 @ 20 DFT/coat (2x20=40)	105.115	
9.6	401 to 550	SSPC-SP-10: 1 coat of F-12 @ 20 DFT/coat	None	2 coats of F-12 @ 20 DFT/coat (2x20=40)	60	F-12 shall be ambient temperature curing type.

* Flare line within unit or offsite areas shall be coated as per Clause 10.3 of Table 10.0, but having finish coat of 2 coats of F-12.

NOTES:

1. The list of items given in the heading of the above table is not exhaustive. There may be more items for a particular contract where these specifications are used. The Contractor is fully responsible for completing painting including prefabrication primer for all the items supplied and fabricated through his scope of work as per tender document.

2. If the Pre-erection/Pre-fabrication & Shop Primer has already been completed, the same shall not be repeated again in the field. In case the damages of primer are severe and spread over large areas, the engineer-in-charge may decide & advise re-blasting and priming again. Repair of pre• fabrication/pre-erection primer, if required, shall be done as per Table 7.2.

3. In case of Paint systems as per SL Nos. 9.5 and 9.6, the color bands shall be applied over the Aluminum paint as per the Color coding requirement for specific service of piping given in Clause 19.0.

4. All coating system including surface preparation, primer, and finish coat for piping hall is done at field only.

TABLE 10.0 COATING SYSTEM FOR UNIT AREAS AS WELL AS DM, CPP, COOLING TOWER OF INLAND PLANTS AND FOR ALL AREAS (UNIT, OFFSITE, DM, CPP, ete.) OF COASTAL PLANTS

Sl. No.	Design Temp in °C	Surface Preparation & Pre-erection/Shop Primer	Coating System (Post-erection/Field)		Total Final DFT in Microns (min.)	Remarks
			Primer	Finish Coat		
10.1	-90 to -15	SSPC-SP-10; 1 coat of F-9 @ 65-75 DFT/coat	None	None	65-75	a) No over-coating to be done on F-9 as it will lead to mud cracking. b) F-12 shall be ambient temperature curing type c) Finish coat including primer compatible with finish coat (i.e. field primer) shall be applied at site only. Finish coating is not permitted at equipment manufacture shop.
10.2	-14 to 80	SSPC-SP-10; 1 coat of F-9 @ 65-75 DFT/coat	1 coat of P-6 @ 4 DFT/coat	2 coats of F-6A @ 100 DFT/coat + 1 coat of F-2 @ 40 DFT/coat; (2x100+40=240)	345-355	
10.3	81 to 400	SSPC-SP-10; 1 coat of F-9 @ 65-75 DFT/coat	None	2 coats of F-12 @ 20 DFT/coat 2x20=40	105-115	
10.4	401 to 550	SSPC-SP-10; 1 coat of F-12 @ 20 DFT/coat	None	2 coats of F-12 @ 20 DFT/coat (2x20=40)	60	

NOTES:

1. The list of items given in the heading of the above table is not exhaustive. There may be more items for a particular contract where these specifications are used. The Contractor is fully responsible for completing painting including prefabrication primer for all the items supplied and fabricated through his scope of work as per tender document.

2. If the Pre-erection/Pre-fabrication& Shop Primer has already been completed, the same shall not be repeated again in the field. In case the damages of primer are severe and spread over large areas, the engineer-in-charge may decide & advise re-blasting and priming again. Repair of pre- fabrication/pre-erection primer, if required, shall be done as per Table 7 .2.

3. For external surface of MS chimney with or without refractory lining and for internal surface without refractory lining, paint system as per 10.3 above shall be followed.

4. For external surface of RCC Chimney, 2 coats of F-6 @ 100µ DFT/coat to obtain total DFT of 200 µ shall be applied after proper surface preparation as per guidelines in 5.1.6.

5. In case of paint systems as per SL Nos. 10.3 and 10.4, the color bands shall be applied over the Aluminum paint as per the Color coding requirement for specific service of piping given in Clause 19.0.

6. All coating system including surface preparation, primer, and finish coat for piping shall be done at site/field only.

TABLE 11.0 COATING SYSTEMS FOR EFFLUENT TREATMENT PLANT (ETP)

Sl. No.	Design Temp. in °C	Surface Preparation	Coating System		Total DFT in Microns (min.)	Remarks
			Primer	Finish Coat		
11.1	For Internal Surfaces of CS/MS Items: Bio-sludge sump, Filter feed sump, Process sump, Sanitary sump, Transfer sump, Sludge, Slop oil tank, scrapping mechanism in Clarifier					
	-14 to 80	SSPS-SP-10	1 coat of F-9 @ 65-75 DFT/coat	2 coats of F-6A @ 100 DFT/coat of F-2 @ 40 DFT/coat; (2x100+40+240)	305-315	
11.2	For Internal Surfaces of CS/MS Items: Bio-sludge sump, Filter feed sump, Process sump, Sanitary sump, Transfer sump, Sludge, Slop oil tank, scrapping mechanism in Clarifier					
	-14 to 80	SSPS-SP-10	1 coat of F-9 @ 65-75 DFT/coat	3 coats of F-6A @ 100 DFT/coat (3x100+300)	365-375	Note:1
11.3	All R.C.C./concrete surfaces exposed to effluent water / liquid such as tanks, structures, drains etc. in Process sump, TPI separator (Process and Oil), Aeration Tank and Transfer sump etc.					
	-14 to 80	Blast cleaning to SSPC-SP guide lines and Acid etching with 10-15% HCI acid followed by thorough water washing	Epoxy Screed lining		3mm	Epoxy screed lining shall be applied as per specific manufacturer and Engineer-in-Charge instructions
11.4	C.S/M.S Dual media filters (Internal), Chemical dosing tanks (internal) such as Di-Ammonium Phosphate (DAP) and Urea					
	Up to 60	SSPC-SP-10	Natural Rubber Lining (As per IS 4682, Part 1)		4.5mm	Natural Rubber lining shall be applied as per specific

					manufacturer and Engineer-in-Charge instructions

NOTES :

1. The paint /coating manufacturers shall provide their Quality control test certificate of coating materials (F-6A) for immersion service of the exposed effluent given in 11.2.

TABLE 12.0 EXTERNAL COATING SYSTEMS FOR UNINSULATED CARBON STEEL AND LOW ALLOY STEEL STORAGE TANKS (For all plant locations, coastal or inland)

All Process Units & Off-sites

Sl. No.	Design Temp. in °C	Surface Preparation (Field)	Coating System		Total DFT in Microns (min.)	Remarks
			Primer	Finish Coat		
12.1	All external surfaces of shell, wind girders, appurtenances, roof tops of all above ground tank including top side of external and internal floating roof and associated external structural works					
12.1.1	-14 to 80	SSPS-SP-10	1 coat of F-9 @ 65-75 DFT/coat + 1 coat of P-6 @ 40 DFT/coat;	2 coats of F-6A @ 100 DFT/coat + 1 coat of F-2 @ 40 DFT/coat;	345-355	F-6 should be suitable for occasional water immersion
12.1.2	81 to 150	SSPS-SP-10	1 coat of F-15 primer @ 80 DFT/coat + 1 coat of F-15 intermediate coat @ 80 DFT/coat;	1 coat of F-15 finish coat @ 80 DFT/coat + 1 coat of F-2 @ 40 DFT/coat;	280	-
12.1.3	151 to 500	SSPC-SP-10	1 coat of F-9 @ 65-75 DFT/coat	2 coats of F-12 @ 20 DFT/coat Or 1 coat of F-16 @ 50 DFT/coat	105 or 115	-
12.2	External surfaces of bottom plate (soil side) for all storage tanks					
12.2.1	-14 to 80	SSPC-SP-10	1 coat of F-9 @ 65-75 DFT/coat	3 coats of F-7 @ 100 DFT/coat (3x100=300)	365-375	F-7 should be suitable for immersion service of the products given
12.2.2	81 to 150	SSPC-SP-10	1 coat of F-15 primer @ 80 DFT/coat + 1 coat of F-15 intermediate coat @ 80 DFT/coat ; (80+80=160)	1 coat of F-15 finish coat @ 80 DFT/coat	240	-
12.2.3	151 to 550	SSPC-SP-10	1 coat of F-16 @ 125 DFT/coat	1 coat of F-16 @ 125 DFT/coat	250	-
12.3	For underside of the bottom plate (in case tank is not lifted during PWHT) (see Note 2c)					
12.3.1	-180 to 650	For CS SSPC SP-6 Commercial Blast	1 coat of inert polymeric matrix	2 coats of inert polymeric matrix	350-400	Products form JOTUN or HI-TEMP coating or SK

		For SS SSPC SP-1 with non-chloride solvent	coating @ 125	coating @ 125		FORMULATIONS are recommended

NOTES:

1. All paint coating application including primer for tankage shall be carried out at field after erection and completion of all welding.

2. For underside of bottom plate:

a) Painting shall be carried out before laying of bottom plate for tanks with Non-Post Weld Heat Treatment (PWHT).
b) For tanks with PWHT, painting shall be carried out after PWHT.
c) In case tank is not lifted during PWHT then painting shall be applied before laying of bottom plate, clause no. 12.3.1 shall be followed.

Caution: PWHT temperature shall not exceed 650°C.

TABLE 13.0 INTERNAL COATING SYSTEMS FOR CARBON STEEL AND LOW ALLOY STORAGE TANKS

All Process Units & Off-sites

Sl. No.	Design Temp. in °C	Surface Preparation (Field)	Coating System		Total DFT in Microns (min.)	Remarks
			Primer	Finish Coat		
13.1	CRUDE OIL, ATF, TURPENTINE OIL, LUBRICATING OIL AND VEGETABLE OIL					
13.1.1	-14 to 90	SSPC-SP-10	1 coat of F-15 primer @ 80 DFT/coat	1 coat of F-15 intermediate coat @ 80 DFT/coat + 1 coat of F-15 finish coat @ 80 DFT/coat;	240-300	-
13.2	PETROLEUM PRODUCTS & INTERMEDIATES like LDO, HSD, GAS OIL, FEEDS of FCC-PC, FCC-LCO, VGO-HDT, ISOM, DHDT, REFORMATE, DCU, NHT & GASOLINE, NAPHTHA, ISOMERATE AND KEROSENE. Underside of Floating roofs, internal surface of cone roof, inside of bottom plate, internal surfaces of Bare shell for full height, underside of floating roof, oil side surfaces of pontoons, support structures and ladders etc.					
13.2.1	-14 to 45	SSPC-SP-10	1 coat of F-9 @ 75 DFT/coat	-	75	Note-2
13.2.2	46 to 90	SSPC-SP-10	1 coat of F-15 primer @ 80 DFT/coat	1 coat of F-15 intermediate coat @ 80 DFT/coat + 1	240-300	-

				coat of F-15 finish coat @ 80 DFT/coat;		
13.3	POTABLE AND FIRE WATER All internal surfaces, accessories and roof structures of Cone and Dome roof tanks					
13.3.1	-14 to 45	SSPC-SP-10	1 coat of P-6 @ 100 DFT/coat	2 coats of F-6A @ 100 DFT/Coat; (2x100=200)	300-350	Note-4
13.4	DE-MINERALIZED (DM) WATER All internal surfaces, accessories and roof structures of Cone and Dome roof tanks					
13.4.1	-14 to 60	SSPC-SP-10	1 coat of P-6 @ 100 DFT/coat	2 coats of F-6C @ 200 DFT/coat; (2x200=400)	400-450	-
13.4.2	61 to 150	SSPC-SP-10	1 coat of F-15 primer @ 80 DFT/coat	1 coat of F-15 intermediate coat @ 80 DFT/coat + 1 coat of F-15 finish coat @ 80 DFT/coat; (80+80=160)	240-300	-
13.5	HYDROCHLORIC ACID (HCI) 10% All internal surfaces, accessories and roof structures of Cone and Dome roof tanks					
13.5.1	-14 to 60	SSPC-SP-10	None	Natural Rubber Lining	4.5 mm	-
13.6	AGGRESSIVE SOLVENTS LIKE HEXANE, HEXENE, BENZENE, XYLENE AND TOLUENE All internal surfaces, accessories and roof structures of Cone and Dome roof tanks					
13.6.1	-14 to 65	SSPC-SP-10	1 coat of F-9 @ 75 DFT/coat	-	75	-
13.7	ETHYLENE CLYCOL (EG) TANKS Internal shell-full height, bottom plate, underside of roof and all accessories					
13.7.1	All	SSPC-SP-10	None	3 coats of vinyl chloride co-polymer AMERCOAT 23 @ 75/coat; (3x75+225)	225	-
13.8						
13.8.1	-14 to 90	SSPC-SP-10	1 coat of F-15 primer @ 80 DFT/coat	1 coat of F-15 intermediate coat @ 80 DFT/coat + 1 coat of F-15 finish coat @ 80 DFT/coat; (80+80=160)	240	-

13.10	VACUUM RESIDUE, FUEL OIL, DRY SLOP, BITUMEN AND OTHER HIGH TEMPERATURE HYDROCARBON LIQUIDS Underside of floating roof, internal surface of cone roof, bottom plate, inside of bare shell – including wetted and non wetted surfaces, oil side surfaces of deck plates, oil side surfaces of pontoons, roof structure, structural steel and ladders					
13.10.1	Up to 150ºC	SSPC-SP-10	1 coat of F-17 primer @ 125 DFT/coat	1 coat of F-17 intermediate coat @ 125 DFT/coat + 1 coat of F-17 finish coat @ 125 DFT/coat; (125+125=250)	375	Note:3
13.11	ALKALIS UP TO 505 CONCENTRATION All internal surfaces, accessories and roof structures of Cone and Dome roof tanks					
13.11.1	Up to 60 ºC	SSPC-SP-10	1 coat of F-15 primer @ 80 DFT/coat	2 Coats of F-6 A @ 100 DFT/coat; (2x100=200)	280-100	-

NOTES:

1. All paint coating application including primer shall be carried out after erection and completion of all welding work at site.

2. F-6A should be suitable and resistant for immersion service for the respective Hydrocarbons.

3. This system can be used where maximum operating temperature is below 150°C and design temperature is up to 200°C. Cases of operating temperature > 150°C are not covered in this spec; such cases shall be covered in the job specifications.

4. F-6 A shall be suitable for drinking water service and should have competent authority certification.

TABLE 14.0 COATING SYSTEMS FOR EXTERNAL SIDE OF UNDERGROUND CARBON STEEL PLANT PIPING AND UNDERGROUND VESSELS.

Sl. No.	Design Temp. in ºC	Surface Preparation (Field)	Coating System		Total DFT in Microns (min.)	Remarks
			Primer	Finish Coat		
14.1	**Underground carbon steel plant piping**					
14.1.1	25 to 35	-	SSPC-SP-10; 1 coat of	1 layer of coaltar tape coating @	4 mm	The primer DFT is not measurable Reconciliation

			synthetic fast drying primer 25 @ DFT/coat	2mm + 1 coat of synthetic fast drying primer 25 @ DFT/coat + 1 layer of coal tar tape coating @ 2mm/layer as per EIL Standard Specification No.6-79-0011		primer shall be done by coverage of maximum to sq.m/litre
14.2.1	66 to 150	-	SSPC-SP-10; 1 coat of F-17 primer @ 125 DFT/coat	1 coat of F-17 intermediate coat @ 125 DFT/coat + 1 coat of F-17 finish coat @ 125 DFT/coat	375	-
14.2.2	151 to 400	-	SSPC-SP-10; 1 coat of F-16 primer @ 125 DFT/coat	1 coat of F-16 finish coat @ 125 DFT/coat	250	-
14.3	**External side of un-insulated underground storage vessels**					
14.3.1	-40 to 80	SSPC-SP-10; 1 coat of F-9 @ 65-75 DFT/coat	-	3 coats of F-7 @ 100 DFT/coat	365-375	-
14.3.2	81-150	SSPC-SP-10; 1 coat of F-17 primer @ 125 DFT/coat	-	1 coat of F-17 intermediate coat @ 125 DFT/coat + 1 coat of F-17 finish coat @ 125 DFT/coat	375	-
14.3.3	151-400	SSPC-SP-10; 1 coat of F-16 primer @ 125 DFT/coat	-	1 coat of F-16 finish coat @ 125 DFT/coat	250	-

TABLE 15.0 COATING UNDER INSULATION (COASTAL OR INLAND PLANTS). ALL UNITS AREAS & OFF-SITES
For insulated Piping, Equipments, Storage vessels, tanks, Columns etc of Carbon Steel, LTCS, Low Alloy Steel & Stainless Steels.

Sl. No.	Design Temp. in °C	Surface Preparation (Field)	Coating System		Total DFT in Microns (min.)	Remarks
			Primer	Finish Coat		
15.1	**Carbon steel, LTCS and low Alloy steel Piping**					
15.1.1	-45 to 120	SSPC-SP-10; 1 coat of F-15 @ 75 DFT/coat	1 coat of F-15 @ 75 DFT/coat	2 coats of F-15 @ 75 DFT/coat; (2x75=150)	225-250	-
15.1.2	121-540	SSPC-SP-10; 1 coat of F-12 @ 20 DFT/coat	None	2 coat of F-12 @ 20 DFT/coat; (2x2=40)	60	-
15.2	**Carbon steel, LTCS and low Alloy steel – Storage vessels, Reactors, Columns & Equipments**					
15.2.1	-45 to 120	SSPC-SP-10; 1 coat of F-15 @ 75 DFT/coat	1 coat of F-15 @ 75 DFT/coat	2 coats of F-15 @ 75 DFT/coat (2x75+150)	225-250	-
15.2.2	121 to 540	Temporary oil based varnish coatings to be provided for transport and storage	Thermally Sprayed Aluminium coating (TSAC) Refer ANNEXURE-I		-	-
15.3	**Stainless Steel (SS) including Alloy-20 piping (Note:2)**					
15.3.1	-180 to Zero	For CS SSPC SP-6 Commercial Blast	1 coat of inert polymeric matrix coating @ 125	2 coats of inert polymeric matrix coating @ 125	350-400	Products from JOTUN or HI-TEMP coatings or SK FORUMATIONS are recommended
15.3.2	0 to 125	SSPC-SP-10 (15-25 surface profile) 1 coat of F-15 @ 80 DFT/coat	1 coat of F-15 intermediate coat @ 80 DFT/coat	1 coat of F-15 finish coat@80 DFT/coat;	240	If the piping & equipments are already erected then surface shall be prepared by cleaning with emery paper and wash/flush with chloride free DM water followed by wiping with

						organic solvent
15.3.3	126 to 400	SSPC-SP-10 1 coat of F-16 @ 125 DFT/coat	None	1 coat of F-16 @ 125 DFT/coat	250	Not recommended for operating temperature
15.3.4	401 to 600	SSPC-SP-10; 1 coat of Amercoat 738@ 125 DFT/coat	None	1 coat of Amercoat 738@125 DFT/coat	250	Between 60-120ºC
15.4	**Coating system for Cyclic Service of Carbon Steel, LTCS, Low Alloy Steel & Stainless Steel**					
15.4.1	-40 to 150	SSPC-SP-10 (15-25 surface profile) 1 coat of F-15 @ 80 DFT/coat	1 coat of F-15 intermediate coat @ 80 DFT/coat	1 coat of F-15 finish coat @ 80 DFT/coat;	240	Apcothern EPN 200 of M/s Asian Paints Ltd OR Equivalent
15.4.2	- 180 to 650	For CS SSPC SP-6 Commercial Blast For SS SSPC-SP-1 with non-chloride solvent	1 coat of inert polymeric matrix coating @ 125	2 coats of inert polymeric matrix coating @ 125	350-400	Products from JOTUN or HI-TEMP coatings or SK FORMULATIONS are recommended
15.5	**No painting is required for insulated Monel, Incoloy and Nickel Lines**					

NOTES:

1. "Cyclic Service" is characterized by rapid temperature fluctuation.
2. The blast cleaning abrasives for SS and Alloy steel surfaces shall be Aluminum oxide grits/shots or garnet.
3. In case of overlapping of temperature ranges as mentioned in 15.4.l and 15.4.2, clause 15.4.1 shall be followed.

TABLE 16.0 COATING SYSTEM FOR CARBON STEEL COMPONENTS OF COOLERS I CONDENSERS (INTERNAL PROTECTION) FOR FRESH WATER SERVICE

Fresh Water boxes, channels, partition plates, end covers and tube sheets etc.

Sl. No.	Design Temp. in ºC	Surface Preparation & Pre-erection/Shop Primer	Coating System (Post-erection / Field)		Total DFT in Microns (min.)	Remarks
			Primer	Finish Coat		

16.1	Up to 80 °C	SSPC-SP-10	1 coat of F-15 @ 80 microns	2 coats of F-15 @ 80 DFT/coat;	240	-
16.2	80 to 140	SSPC-SP-10	-	1 coat of Glass Fibre Reinforced Novolac epoxy of 1.5 mm DFT	1500	-

TABLE 17.0 COATING SYSTEM (INTERNAL PROTECTION) FOR GALVANIZED OR NON FERROUS OR STAINLESS STEEL/DUPLEX STAINLESS STEEL COMPONENTS OF COOLERS/ CONDENSERS FOR FRESH WATER SERVICE

Sl. No.	Design Temp. in °C	Surface Preparation & Pre-erection/Shop Primer	Coating System (Post-erection / Field)		Total DFT in Microns (min.)	Remarks
			Primer	Finish Coat		
17.1	Up to 80	Sweep Blasting	1 coat of F-15 @ 80 DFT/coat;	1 coat of F-15 @ 80 DFT/coat;	160	-
17.2	80 to 140	Sweep Blasting	-	1 coat of Glass Fibre Reinforced Novolac epoxy of 1.5 mm DFT	1500	-

18.0 STORAGE

18.1 All paints and painting materials shall be stored only in rooms to be arranged by contractor and approved by Engineer-in-charge for the purpose. All necessary precautions shall be taken to prevent fire. The storage building shall preferably be separate from adjacent building. A signboard bearing the word "PAINT STORAGE - NO NAKED LIGHT - HIGHLY INFLAMABLE" shall be clearly displayed outside. Manufacturer's recommendation shall be followed for storage of paint materials.

19.0 COLOUR CODE

The following color coding system shall be followed. However alternate color coding may also be followed as per Owner's color coding practice/scheme.

19.1 IDENTIFICATION

The system of color coding consists of a ground color and secondary color bands superimposed over the ground color. The ground color identifies the basic nature of the service and secondary color band over the ground color distinguishes the particular service. The ground color shall be applied over the entire length of the un-insulated pipes. For insulated lines ground color shall be provided as per specified length and interval to identify the basic nature of service and secondary color bands to be painted on these specified length to identify the particular service. Above color code is applicable for both unit and offsite pipelines.

COLOUR CODING

SR. No.	SERVICE	RECOMMENDED COLOUR FOR PAINT SYSTEM	RAL COLOUR COADE	
			BASE COLOUR	BAND COLOUR
HYDROCARBON LINES (UNINSULATED)				
1	CRUDE SOUR	Dark Admiralty grey with 1 orange band	7012	2011
2	CRUDE SWEET	Dark Admiralty grey with 1 red band	7012	3001
3	LUBE OILS	Dark Admiralty grey with 1 green band	7012	6010
4	FLARE LINES	Heat Resistant Aluminium	9006	
5	LPG	Orange with 1 oxide red band	2011	3009
6	PROPYLENE	Orange with 2 blue bands	2011	5013
7	NAPTHA	Orange with 1 green band	2011	6010
8	M.S.	Orange with 1 dark admiralty grey band	2011	7012
9	A.V. GASOLINE (96 RON)	Orange with 1 band each of green, white and red bands	2011 6010	9010 3001
10	GASOLINE (regular, leaded)	Orange with 1 black band	2011	9005
11	GASOLINE (premium, leaded)	Orange with 1 blue band	2011	5013
12	GASOLINE (white)	Orange with 1 white band	2011	9010
13	GASOLINE (Aviation 100/130)	Orange with 1 red band	2011	3001
14	GASOLINE (Aviation 115/145)	Orange with 1 purple band	2011	4006
15	N-PENTANE	Orange with 2 blue bands	2011	5013
16	DIESEL OIL (White)	Oxide red with 1 white band	3009	9010
17	DIESEL OIL (Black)	Oxide red with 1 yellow band	3009	1023
18	KEROSENE	Oxide red with 1 green band	3009	6010
19	HY. KEROSENE	Oxide red with 2 green bands	3009	6010
20	DISUFIDE OIL (EX-MEROX)	Oxide red with 1 black band	3009	9005

21	M.T.O.	Oxide red with 3 green bands	3009	6010
22	DHPPA	Oxide red with 2 white bands	3009	9010
23	FLUSHING OIL	Oxide red with 2 black bands	3009	9005
24	LAB FS	Oxide red with 2 dark admiralty grey bands	3009	7012
25	LAB RS	Oxide red with 3 dark admiralty grey bands	3009	7012
26	LAB (Off. Spec)	Oxide red with 1 light grey band	3009	7035
27	N-PARAFFIN	Oxide red with 1 blue band	3009	5013
28	HEAVY ALKYLATE	Oxide red with red band	3009	3001
29	BELOW DOWN. VAPOR LINE	Off white / Aluminum with 1-Brown band	9006	8004
30	BLOWDOWN	Off white /Aluminum with 2 brown bands	9006	8004
31	A.T.F.	Leaf brown with 1 white band	8003	9010
32	TOULENE	Leaf brown with 1 yellow band	8003	1023
33	BENZENE	Leaf brown with 1 green band	8003	6010
34	LAB PRODUCT	Leaf brown with 1 blue band	8003	5013
35	FUEL OIL	Black with 1 yellow band	9005	1023
36	FUEL OIL (Aromatic rich)	Black with 2 yellow bands	9005	1023
37	ASPHALT	Black with 1 white band	9005	9010
38	SLOP AND WASTE OILS	Black with 1 orange band	9005	2011
39	SLOP AROMATICS	Black with 2 orange bands	9005	2011
CHEMICAL LINES				
40	TRI-SODIUM PHOSPHATE	Canary yellow with 1 violet band	1012	5000
41	CAUSTIC SODA	Canary yellow with 1 black band	1012	9005
42	SODIUM CHLORIDE	Canary yellow with 1 white band	1012	9010
43	AMMONIA	Canary yellow with 1 blue band	1012	5013
44	CORROSION INHIBITOR	Canary yellow with 1 Aluminum band	1012	9006
45	HEMAMETA PHOSPHATE	Canary yellow with 2 black bands	1012	9005
46	ACID LINES	Golden Yellow with 1 red band	1012	3001
47	RICH AMINE	Canary yellow with 2 blue bands	1012	5013
48	LEAN AMINE	Canary yellow with 3 blue bands	1012	5013
49	SOLVENT	Canary yellow with 1 green band	1012	6010
50	LCS	Canary yellow with 1 smoke grey	1012	7031
WATER LINES				
51	RAW WATER	Sky blue with 1 black band	5015	9005
52	INDUSTRIAL	Sky blue with 2 signal red band	5015	3001

	WATER			
53	TREATED WATER	Sky blue with 1 oxide red band	5015	3009
54	DRINKING WATER	Sky blue with 1 green band	5015	6010
55	COOLING WATER	Sky blue with 1 light brown band	5015	1011
56	SERVICE WATER	Sky blue with 1 signal red brown	5015	3001
57	TEMPERED WATER	Sky blue with 2 green bands	5015	6010
58	DM WATER	Sky blue with 1 aluminum band	5015	9006
59	DM WATER ABOVE 150° F	Sky blue with 2 black bands	5015	9005
60	SOUR WATER	Sky blue with 2 yellow bands	5015	1013
61	STRIPPED WATER	Sky blue with 2 blue bands	5015	5013
62	ETP TREATED WATER	Sky blue with 2 oxide red bands	5015	3009
FIRE PROTECTION SYSTEM (ABOVE GROUND)				
63	FIRE WATER FOAM & EXTINGUISHERS	Post office red	3002	
AIR & OTHER GAS LINES (UNINSULATED)				
64	SERVICE AIR	Sea green with 1 signal red band	6018	3001
65	INSTRUMENT AIR	Sea green with 1 black band	6018	9005
66	NITROGEN	Sea green with 1 orange band	6018	2011
67	FREON	Sea green with 1 yellow band	6018	1023
68	CHLORINE	Canary yellow with 1 oxide band	1012	3009
69	SO_2	Canary yellow with 2 white bands	1012	9010
70	H_2S	Orange with 2 red oxide bands	2011	3009
71	GAS (Fuel)	Orange with 1 aluminum band	2011	9006
72	GAS (Sour)	Orange with 2 aluminum bands	2011	9006
73	GAS (Sweet)	Orange with 2 signal red band	2011	3001
74	HYDROGEN	Orange with 1 light green band	2011	6021
STEAM AND CONDENSATE LINES (UNINSULATED)				
75	HP STEAM	Off white / Aluminum with 1 yellow band	9006	1023
76	MP STEAM	Off white / Aluminum with 1 red band	9006	3001
77	MLP STEAM	Off white / Aluminum with 1 orange band	9006	2011
78	LP STEAM	Off white / Aluminum with 1 light green band	9006	6021
79	CONDENSATE	Sky blue with 1 white band	5015	9010
80	CONDENSATE ABOVE 150° F	Sky blue with 3 oxide red band	5015	3009
81	BFW	Sky blue with 2 red bands	5015	3001
Note : For all insulated steam lines, the colour coding shall be follow as given for un-insulated lines with the specified length of color bands.				

INSULATED HYDROCARBON PIPING				
82	IFO SUPPLY	1 Black ground colour with 1 yellow band in centre	9005	1023
83	IFO RETURN	Black ground colour with 1 green band in centre	9005	6010
84	HPS	Black ground colour with 1 red band in centre	9005	3001
85	BITUMEN	Black ground colour with 2 red bands in centre	9005	3001
86	CLO	Black ground colour with 1 brown band in centre	9005	8004
87	VB TAR	Black ground colour with 1 blue band in centre	9005	8004
88	VR AM (BITUMEN / VBU FEED)	1 Black ground colour with 2 blue bands in centre	9005	5013
89	VR BH	1 Black ground colour with 2 blue bands in centre	9005	5013
90	VAC. SLOP	1 Black ground colour with 1 white band in centre	9005	9010
91	SLOP	1 Black ground colour with 1 orange band in centre	9005	2011
92	CRUDE SWEET	1 Dark admiralty grey ground colour with 1 red band in centre	7012	3001
93	CRUDE OUR	1 Dark admiralty grey ground colour with 1 orange band in centre	7012	2011
94	VGO/ HCU	1 Oxide red ground colour with 2 steel grey bands in centre	3009	7011
95	OHCU BOTOM / FCCU FEED	1 Oxide red ground colour with 2 steel grey bands in centre	3009	7011
UNINSULATED EQUIPMENTS, TANKS AND STRUCTURES				
96	HEATER STRUCTURE	Steel grey	7011	
97	HEATER CASING	Heat resistant aluminium	9006	
98	VESSELS & COLUMNS	Aluminium	9006	
99	HYDROGEN BULLETS	Pink	3014	
100	LPG VESSELS	Oxide red	3009	
101	SO2 VESSEL	Canary yellow	1012	
102	HEAT EXCHANGER	Heat resistant aluminium	9006	
103	FO TANK AND HOT TANKS	Black	9005	
104	ALL OTHER TANKS	Aluminum / Off white	9006	
		Golden yellow	1004	
106	SOUR WATER	Sky Blue	5015	

107	OUTER SURFACE IN BOILER HOUSE	Heat resistant aluminum	9006	
108	COMPRESSORS AND BLOWERS	Dark admiralty grey	7012	
109	PUMPS	Navy blue	5014	
110	MOTORS & SWITCH GEAR	Bluish green	5024	
111	HAND RAILING	Signal red	3001	
112	STAIRCASE, LADDER AND WALKWAYS	Black	9005	
113	LOAD LIFTING EQUIPMENT AND MONORAILS ETC	Leaf brown	8003	
114	GENERAL STRUCTURE	Black	9005	
PIPES AND FITTINGS OF ALLOY STEEL AND SS MATERIAL IN STORE				
115	IBR	Signal red	3001	
116	9Cr-1Mo	Verdigris green	6021	
117	5Cr-0.5Mo	Satin blue	5012	
118	2 ¼ Cr-1Mo	Aircraft yellow	1026	
119	1 ¼ Cr-Mo	Traffic Yellow	1023	
120	SS-304	Dark blue grey	5008	
121	SS-316	Dark violet	4005	
122	SS321	Navy blue	5014	
SAFETY COLOUR SCHEMES				
123	DANGEROUS OBSTRUCTION	Black and alert orange band	9005	2008
124	DANGEROUS OR EXPOSED PARTS OF MACHINERY	Alert orange	2008	

Note: All LPG service PSVs shall be painted Deep Blue.

All drains & Vents shall be painted in Main line color.
The color code scheme is for identification of piping service group, It consists of a ground color and 1 / 2 color bands.

19.2 Ground Color

On uninsulated pipes, the entire pipe has to be painted in ground color., and on metal cladded insulated lines, minimum 2M long portion should be painted.

19.3 Color Bands

Location of color bands:

- At Battery Limits
- Intersection points & change of direction points in piping
- Midway of piping section, near valves, across culverts
- At 50 M interval on long stretch pipes
- At starting and termination points.

Minimum width:

NB	Width

3" and below	75mm
Above 3" to 6"	NB X 25MM
Above 6" to 12"	NBX 18MM
Above 12"	NBX 15 MM

!!! Note: For insulated pipes, NB indicatesOD of the insulation.

Sequence:
Color bands shall be arranged in sequence showing Table above and the sequence follows the direction of flow. The width of the 1•1 Band to 2nd band is 4:1,

!!! Note:
Wherever deemed required by Process Department or Safety, pipes handling hazardous substances will be given hazard marking of 30 mm wide diagonal stripes of Black and Golden Yell ow as per IS : 2379.

19.4 Special Camouflage Painting for Uninsulated Crude and Product Storage Tanks.

Paint specification shall be as per standards.

Camouflage painting scheme for Defense requirement in irregular patches will be applied with 3 colors

Dark Green	Light green	Medium Brown
5	3	2

The patches shall be irregular and asymmetrical and inclined at 30 to 60 Degrees.

Patches should be continuous at surface meeting lines *I* points.

Slits / holes shall be painted in dark green shade.

Width of patches shall be 1 to 2 meters.

19.5 Identification Markings on Equipment / Piping

Equipment tag Numbers shall be Stenciled *I* neatly painted using normal 'Arial' Lettering Style on all equipment and piping (Both insulated & uninsulated) after completion of all paint works. Lettering colour shall be either BLACK or WHITE, depending upon the background, so as to obtain good contrast.

Operations Group shall specify location

Sizes shall be:

Columns, Vessels, Heaters:	150mm
Pumps and other M/c	50 mm
Piping	OD I 2 with Maximum l 00 MM
Storage Tanks	(As per Drawings)

19.6 Color Coding for Control Valve

a) Carbon Steel Body - Light grey

Alloy Steel Body - Canary yellow

Stainless Steel Body - Natural

b) The actuator of the Control valve shall be painted as :

Direct action (open on air failure) valves - Green

Reverse acting (close on air failure) valves - Red

The painting Status shall be comprehensively updated every 6 months for compliance.

19.7 Colour Coding for Structural & Others

Sl. No	Item	Color	Indicative
1	Pipe rack structurals	Dark Admiraltry Grey	
2	Chequered Plate (Both faces)	Black	
3	Grating	Black	
4	Ladder Rungs & Railing Vertical Posts	Black	
5	Hand Rail, Middle rail, Toe Plate	Signal Red	
6	Ladder Vertical Posts	Signal Red	
7	Building Structurals, Steel Columns, brackets, beams, bracings, roof trusses, purlings, side girts, louvers, stringers	Dark Admiratry Grey	
8	OverHead Monorail	Signal Red	
9	Gantry Girder & Monorail	Dark Green	
10	Monorail Stopper Plates	Signal Red	
11	Coke Cutting System	Signal Red	
12	EOT/HOT Cranes	Canary Yellow	
13	Transformers & Battery room structurals	Dark Admiraltry Grey	
14	Electrical Motors	Dark Blue	

20.0 IDENTIFICATION OF VESSELS, PIPING ETC

20.1 Equipment number shall be stencilled in black or white on each vessel, column, equipment & machinery (insulated or uninsulated) after painting. Line number in black or white shall be stencilled on all the pipe lines of more than one location as directed by Engineer-In-Charge; Size of letter printed shall be as below:

Column & Vessels	150mm (high)
Pump, compressor & other machinery	50mm (high)
Piping	40-150 mm

20.2 Identification of Storage Tanks

The storage tanks shall be marked as detailed in the drawing.

22.0 QUALITY CONTROL, INSPECTION AND TESTING

22.1 All painting materials including primers and thinners brought to site by contractor for application shall be procured directly from manufactures as per specifications and shall be accompanied by manufacturer's test certificates. Paint formulations without certificates are not acceptable (see section 24.0).

22.2 The contractor must produce Test Certificate from Pre Qualified Paint Manufacturer for various tests as detailed out in section 25.1 of this document, for each batch & for each category of product. The Engineer-in-Charge shall have the right to test wet samples of paint from each batch at random for verifying quality of paint supplied. Contractor shall arrange to have such tests, when called for by Engineer-in-Charge, performed at his cost any one of the independent laboratories listed in the 25.1 of this document.

Samples for the test will be drawn at random in presence Engineer-in-Charge or his representations. Following tests to be carried out if called for by Engineer-in-Charge:

Specific Gravity
% solids by weight (% zinc content in case of inorganic or organic zinc primer)
Drying time (touch dry & full curing)
Adhesion
Flexibility
Hardness
Storage stability (pot life)

Test methods for above tests shall be as per relevant ASTM or ISO Standard.

22.3 The painting work shall be subject to inspection by Engineer-In-Charge at all times. In particular, following stage-wise inspection will be performed and contractor shall offer the work for inspection and approval of every stage before proceeding with the next stage. The record of inspection shall be maintained in the registers. Stages of inspection are as follows:

(a) Surface preparation
(b) Primer application
c) Each coat of paint

During surface preparation, following tests are to be carried out:

- Test for absence oil & grease after degreasing before blasting as per procedure given in sec 6.7 of Annexure-I of this specification (specification for thermally sprayed Alwninium Coating).
- Tests for surface finish of blasted surface shall be done by visual inspection using SSPC- VIS 1. Clear cellophane tape test as per ISO 8502-3 shall be used to confirm absence of dust on blasted surface. Checks shall be done on each component at least once per 200 m2 of blasted surface and minimum of 3 checks per shift.
- Test for presence of soluble salt as per method ISO 8502-9. Maximum allowable salt content shall be considered 20 mg/m2 (2 mg/cm"), Checks shall be done on each component at least once per 200 m2 of blasted surface and minimum of 3 checks per shift. In case salt exceeds specified limit, the contaminated surface shall be cleaned by method as per Annexure-C of IS 12944-4 (water cleaning). After cleaning surface shall be retested for salt after drying.
- Blast profile measurement +This shall be done as described in sec 6.2 of Annexure-I of this specification (Specification for thermally sprayed Aluminum).
- Test for blasting Media and Blasting air- this shall be done as described in sec 6.6 of Annexure-I of this specification (Specification for thermally sprayed Aluminum).

In addition to above, record should include type of shop primer already applied on equipment e.g., zinc silicate, or zinc rich epoxy, or zinc phosphate.

Any defect noticed during the various stages of inspection shall be rectified by the contractor to the entire satisfaction of Engineer-In-Charge before proceeding further. Irrespective of the inspection, repair and approval at intermediate stages of work, contractor shall be responsible for making good any defects found during final inspection/guarantee period/defect liability period as defined in general condition of contract. Dry film thickness (OFT) shall be checked and recorded after application of each coat and extra coat of paint should be applied to make- up the OFT specified without any extra cost to owner, the extra coat should have prior approval of Engineer-in-charge.

22.4 Primer Application

After surface preparation, the primer should be applied to cover the crevices, corners, sharp edges etc. in the presence of inspector nominated by Engineer-In-Charge.

22.5 The shades of successive coats should be slightly different in color in order to ensure application of individual coats, the thickness of each coat and complete coverage should be checked as per provision of this specification. This should be approved by Engineer-In• Charge before application of successive coats.

22.6 The contractor shall provide standard thickness measurement instrument with appropriate range(s) for measuring.

Dry film thickness of each coat, surface profile gauge for checking of surface profile in case of sand blasting. Holiday detectors and pinhole detector and protector whenever required for checking in case of immersion conditions.

22.7 Prior to application of paints on surfaces of chimneys, the thickness of the individual coat shall be checked by application of each coat of same paint on M.S.test panel. The thickness of paint on test panels shall be determined by using gauge such as 'Elkometer'. The thickness of each coat shall be checked as per provision of this specification. This shall be approved by Engineer-In-Charge before application of paints on surface of chimney.

22.8 At the discretion of Engineer-In-Charge, the paint manufacturer must provide the expert technical service at site as and when required. This service should be free of cost and without any obligation to the owner, as it would be in the interest of the manufacturer to ensure that both surface preparation and application are carried out as per their recommendations. The contractor is responsible to arrange the same.

22.9 Final inspection of finished coating shall consist of measurement of:

1) Paint dry film thickness (DFT),
2) Adhesion, and,
3) Holiday detection check as well as for finish and workmanship.

1) Coating DFT measurement shall be as per ISO 2808. Type II electromagnetic gauges should be used for ferrous substrates. OFT gauge calibration, number of measurement shall be as per SSPC-DA 2. Measured OFT shall be within + 10% of the dry film thickness, specified in the specifications.

2) Adhesion of the primer to the steel substrate and intercoat adhesion of the subsequent coat(s) after curing for at least a week after application of the topcoat shall be examined by a knife test in accordance with ASTM D 6677. For the knife test, if the rating is better than 8, the adhesion is considered acceptable. The adhesion is destructive and tested areas shall be repaired afterward using the spot repair procedure. Alternatively, the applicator may perform the adhesion test on a steel coupon coated using the same surface preparation and coating application

procedure as the work piece. Adhesion testing shall be carried out for each component at least once per 200 m2 (2000 ft2) of coated surface.

3) Holiday testing shall be conducted in accordance with NACE SP 0188. For immersion services, 100% of coated area shall be inspected for holidays. For atmospheric exposure,10% of coated area which must include weld seams, comers and edges to be holiday tested. Voltage at which test is to be carried out will depend upon OFT of coating being tested and shall be as per NACE SP 0188. Any holiday is unacceptable and should be marked and repaired immediately.

22.10 The contractor shall arrange for spot checking of paint materials for Specific gravity, glow time (ford cup) and spreading rate.

22.11 Final Inspection of coating system

A final inspection shall be conducted prior to the acceptance of the work. The coating contractor and the facility owner shall both be present and they shall sign an agreed inspection report. Such reports shall include:

General
- Names of the coating contractor and the responsible personnel
- Dates when work was performed

Coating Materials
- Information on coating materials being applied
- Condition of coating materials received

Environmental Conditions
- Weather and ambient conditions
- Coating periods

Surface Preparation
- Condition of surface before preparation
- Tools and methods used to prepare surface
- Condition of surface after preparation

Coating Application
- Equipment used
- Mixing procedure prior to application
- Coating application techniques use

Testing
- Type and calibration of inspection instruments used
- Type of quality control tests performed, and results.

23.0 GUARANTEE

23.1 The contractor shall guarantee that the chemical and physical properties of paint materials used are in accordance with the specifications contained herein/to be provided during execution of work.

24.0 QUAIFICATION CRITERIA OF PAINTING CONTRACTOR / SUB CONTRACTOR

Painting contractor who is awarded any job for MRPL, Projects under this standard must have necessary equipments, machinery, tools and tackles for surface preparation, paint application and inspection. The contractor mush have qualified, trained and experienced surface preparator, paint applicator, inspector and supervisors. The contractor supervisor, inspector, surface preparator and paint applicator must be conversant with the standards referred in this specification.

25.0 QUALIFICATION/ACCEPTANCE CRITERIA FOR PAINT COATING SYSTEM

25.1 Pre-Qualification of Paint Coating Manufacturer and his Products

Paint Coating manufacture meeting the following requirements shall be considered for supply of their products. Contractor is advised to select coating manufacturer. Only after obtaining prequalification from MRPL for the manufacturer based on following requirements. Even those manufacturers, whose names are appearing elsewhere in the tender document, under the list of MRPL Recommended or Approved Vendors", will also be required to meet the following prequalification requirements.

- Manufacturer should have been in continuous business of paint coating formulation and manufacturer for at least past 5 years.

- Manufacturer should posses past experience of supplying his products to hydrocarbon processing industry or offshore platforms in the past 5 years.

- Coating manufacturer should have supplied at least 10000 liter of an individual product to hydrocarbon processing industry or offshore platform.

- The manufacturer's manufacturing procedure & QA/QC system shall meet ISO 9001 requirements and preferably should posses ISO 14000 certificate.

- The Quality control set up should be manned by qualified paint technologists whose bio data should be sent along with quality control organization chart.

- Pre-Qualification Testing:
- Manufacturer should have got his products tested at least one time in last 3 years at a reputed independent laboratory for the following test items. Test certificates which are more than 3 years old will not be considered.

Test	Test Method
Specific gravity	ASTM D 1475
Dipping properties	ASTM D 823
Film characteristics	-
Solids content by weight	ASTM D 2369
Drying time	ASTM D 1640
Flexibility	ASTM D 1737/ D 522
Hardness	ASTM D 3363
Adhesion	ASTM D 2197
Abrasion resistance	ASTM D 968/ D 1044
DFT/coat	As per SSPC guidelines
Storage Stability	ASTM D 1849
Resistance to moisture vapour permeability for 2000 hrs	ASTM D 2247
Cyclic Test for the duration of 4200 h (25 cycles a 168 hours)	ISO 7253, ASTM G53
% Zn in Dry film for Inorganic Zinc Silicate primer	-
Chemical Resistance test - 10% & 40% NaOH (applicable only for F-6 & F-15) - 10% H_2SO_4 (applicable only for F-6 & F-15) - 10% Nitric Acid test (applicable only for F-6 & F-15) - Benzene / Toluene (applicable only for F-6 & F-15) - Kerosene (applicable only for F-6 & F-15) - Sea water (applicable only for F-6 & F-15) - MIBK test (applicable only for F-6 & F-15)	ASTM D 543
Resistance to water using water immersion (applicable only for F-6, F-7,F-8, F-14 & F-15)	ASTM D 870
Dry Heat Resistance test (applicable only for F-9, F-6A/B, F-2, F-15, F-16, polysiloxane, heat resistance Al silicone)	
Thermal shock resistance test (only for F-9, F-6, polysiloxane)	ASTM D2485 - 91

Each coating product to be qualified shall be identified by the following

1. An infrared scan (fingerprint), for Part A and B, each component as per ASTM D262
2. Specific gravity of Base and curing agent (Ref. ISO 2811)
3. Ash content (ASTM D1650), volatile and non-volatile matters (ISO 3251) of Each component

The identification shall be carried out on the batch, which is used for the Pre• qualification testing. Pre-qualification of the products shall be carried out at an independent laboratory.

Test shall be carried out at any one of the following laboratories and tests to be witnessed & certified by third party inspection agency (TUV, BY, DNV).

IICT, Hyderabad
HBTI, Kanpur
DMSRDE, Kanpur
BIS Laboratories
UICT, Matunga, Mumbai
RITES, Kolkata
PDIL, Sindri
NTH, Kolkata

Contractor shall furnish to MRPL for approval/ acceptance of all necessary documents/information including test certificates to prove that the paint manufacturers, from whom he intends to procure paint products, meet the various requirements for fulfilling the pre-qualification criteria as given under section 25.l above. The paint manufacturer shall be qualified and approved for supply after review/assessment of the submission made by the contractor.

25.2 Information to be furnished during delivery of coating system:

Contractor along with delivery of paint material has to furnish following information from paint manufacturer to MRPL for acceptance/approval of products.

a) Batch test certificates (Batch Testing)

Along with delivery to site of the paint products from pre-qualified coating manufacturer. Contractor has to produce test certificate from paint manufacturer for each batch and for each category of product for the following test items. Test to be witnessed & certified by third party inspection agency. All test results must mention clearly the batch no. and category of product tested. Tests to be conducted for following properties:

- Infrared scan for Part A and B, each component

- Specific Gravity
- % solids by weight (% zinc content in case of inorganic or organic zinc primer)

b) Product information sheet/ technical data sheet for each category of product.

26.0 METHOD OF SAMPLING & DISPATCH FOR LABORATORY TESTING
(Pre-Qualification tests (sec. 25.1), Batch testing (sec. 25.2) and Inspection testing (sec. 22.0))

26.1 Samples of coating materials should be submitted to the Govt. laboratory in sealed containers with batch no. and test certificate on regular format of manufacturer's testing laboratory. The sampling shall be certified and sealed by a certifying agency.

26.2 All test panels should be prepared by Govt. testing agency colored photographs of test panels should be taken before and after the test and should be enclosed along with test report.

Sample batch no. and manufacturer's test certificate should be enclosed along with the report. Test report must contain details of observation and rusting if any, as per the testing code.

26.3 Manufacturers should intimate the company, details of sample submitted for testing, name of Govt. testing agency, date, contact personnel of the govt. testing agency. At the end of the test the manufacturer should submit the test reports to the company for approval.

26.4 Coating systems for panel test shall be decided after discussion with MRPL.

ANNEXURE-I

SPECIFICATION FOR THERMALLY SPRAYED ALUMINIUM (TSA) COATING

1.0 SCOPE

The following sections outlines the requirement of supply, application and testing of thermally sprayed aluminum coatings (TSAC) for corrosion protection of insulated carbon steel piping and equipments with design temperature not exceeding 540 ° C.

2.0 ITEMS TO BE THERMALLY SPRAYED

Steel Structures/equipments to be protected by TSAC shall be as per Tables 15.0 of this standard specification. Structures, components thermally sprayed shall not have any uncoated area or shall not be in mechanically connected by flanges etc to any uncoated bare steel work. Such adjacent areas to TSA coated areas, if not coated by TSA shall have suitable paint coating system as per the standard specification.

3.0 TSAC REQUIREMENTS

3.1 Surface Preparation

All the parts to be sprayed shall be degreased according to SSPC-SP 1. The absence of oil and grease after degreasing shall be tested by method given elsewhere in the specification (Refer Sec. 6.7). Thereafter the surface to be abrasive blasted to white metal finish as per NACE l/SSPC-SP 5 for marine and immersion service. Using SSPC VIS I, it is to be visually assessed that the blast cleaned surface meets requirement of SSPC-SP 5. Thereafter clear cellophane tape test as per ISO 8502-3 shall be used to confirm absence of dust on the blasted surface. Finally blasted surface shall be tested for presence of soluble salts as per method ISO 8502-9. Maximum allowable salt content shall be considered 50mg/m2. (5 micrograms/cm2). In case salt content exceeds specified limit. The contaminated surface shall be cleaned by method as per Annex C of IS 12944-4 (Water Cleaning). After cleaning the surface shall be retested for salt content after drying. Testing shall be carried out at least on each component, once per 200 m2 and a min of 3 times per shift during progress of work.

The blasting media shall be either chilled iron or angular steel grit as per SSPC-AB-3 of mesh size G-16 to G-40. Copper, Nickel slag, Garnet or Aluminum Oxide as abrasives will also be suitable having mesh size in the range of Gl6 to G24 (10-30 mesh), conforming to SSPC-AB-1. Mesh size shall be required as appropriate to the anchor tooth depth profile requirement and blasting equipment used. The blasted surface should be having angular profile depth not less than 65 microns with sharp angular shape but shall not exceed 85 microns. The profile depth shall be measured

according to NACE standard RP 0287 (Replica Tape) or ASTM D 4417 method B (Profile depth gauge).

For manual blasting one profile depth measurement shall be taken every 10-20 m2 of blasted surface.

Surface preparation shall be completed in one abrasive blast cleaning operation wherever possible.

If rust bloom (visual appearance of rust) appears on the blast cleaned surface before thermal spraying, the affected area shall be reblasted to achieve specified degree of cleanliness after which only thermal spraying shall commence.

Air blasting pressure at nozzle shall be normally maintained at 100 psi. Air pressure and media size should be reduced and adjusted to preclude damage/distortion to thin gauge materials. Blasting time on work piece should be adjusted to only clean the surface and cut required anchor tooth with minimum loss of metal. Blast angle should be as close to perpendicular as possible but in no case greater than ± 30 ° from perpendicular to work surface. Blasting media must be free of debris, excessive fines, and contaminants such as NaCl and sulfur salts (Ref. SEC 6.0 of this Spec). Blast cleaning shall not be performed when the surfaces to be blasted are wet or less than 5°C above dew point temperature or when the relative humidity in the vicinity of the work is greater than 90%.

3.1. l Blasting Equipment

The TSAC applicator shall use mechanical (centrifugal wheel) or pressure pot blast cleaning equipment and procedures. Suction blasting equipment shall not be used. Sec 6.6.2 shall be used to validate clean and dry air.

3.1.2 Feed Stock

The feed stock shall be in the form of wire. The feed stock shall be 99.5% aluminum of commercial purity grade, its composition shall be in accordance with requirement of BS 1475 or ASTM B833 or ISO 209-1 type Al (wrought aluminum and aluminum alloys, wire). Wire shall be supplied in protective wrapping indicating batch number and other details.

3.1.3 Thickness Requirement

The nominal thickness of finished TSAC shall be 250 microns having minimum value-of225 microns at low thickness areas (valleys) and not more than 275 microns at peak areas.

The finished thickness shall be measured using SSPC-PA 2 type 2 fixed probe gauge (Magnetic Gauge).

3.1.4 Coating Bond Strength Requirement

The TSAC coating shall have a minimum individual tensile-bond strength value of 1000 psi for flame sprayed and 1500 psi for arc sprayed coating with an average of 2000 psi for arc sprayed coatings. Minimum tensile bond strength should be achieved by proper anchor tooth profile of blasted surface, laying down the TSA thickness in multiple passes and carrying out TSA application under controlled environment

3.1.5 Porosity

All thermally sprayed metallic coatings will have porosity. For thermally sprayed aluminum coatings porosity shall not exceed 15% of total surface area for flame sprayed coating and 8% for arc spray coating.

4.0 THERMAL SPRAYAPPLICATIONPROCEDURE

Items in the atmospheric zone to be coated by TSA shall be applied by either Flame spray or Arc spray method only. For coating under insulation, application shall be by arc wire method.

4.1 Equipment Set Up

4.1.1 Thermal spray equipment shall be set up calibrated, operated (1) according to manufacturer instructions/technical manuals and also TSAC applicators refinement thereto and (2) as validated by Procedure Qualification (Sec 7 .0 of this specification).

4.1.2 Spray Parameters

Spray parameters (see 4. I .3 below) and thickness of each crossing pass shall be set and shall be validated with bend test (See 6.5 of this Spec).

4.1.3 Spray Parameters

Spray Parameters	Method of Application	
Arc voltage	Arc wire Spray	Flame Wire Spray
	27 V	-
Air pressure	80 psi	80 psi
Steel surface cleanliness	NACE-1 white metal	NACE-1 white metal / or Near white metal
Steel surface profile	75 microns (minimum)	75 microns (min.)
Arc current	250-280A	-
Coating thickness	225 microns (nominal)	225 microns (Nominal)

Coating adhesion	>1500 psi (Total coating), see 3.1.4	>1000 psi
Coating porosity	Less than 80%	Less than 15%
Spray distance (spray Gun work piece)	6-8”	5-7”
Spray Pass width	40 mm	20 mm

The above parameters to be validated with a bend test by the contractor before start of work (for details of bend test see Sec 6.5 of this Spec).

4.2 Post Blasting Substrate Condition and Thermal Spraying Period.

4.2.1 The steel surface temperature shall be at least 5°C above dew point of ambient air temperature.

Steel substrate surface temperature shall be recorded by with a contact pyrometer. Thermal spraying should commence within 15 minutes from the time of completion of blasting

4.2.2 Holding Period

Time between the completion of final anchor tooth blasting and completion of thermal spraying of blasted surface should be no more than four hours. If within this period rust bloom appears Sec 4.4. l of this specification will apply.

4.3 Pre-Heating

For flame spraying, the initial starting area of 1-2 square feet to be preheated to approx.120°C to prevent condensation of moisture in the flame on the substrate. For arc spraying the preheating is not required.

4.4 Thermal Spraying

Spraying should commence only after validation of equipment set up by procedure qualification test and spray parameter validation tests described in Sec 7.0 and 6.5 respectively. Thermal spraying must commence within 15 minutes from the time of completion of blast cleaning

The specified coating thickness shall be applied in several crossing passes. The coating bond strength is greater when the spray passes are kept thin. Laying down an excessively thick spray pass increases the internal stresses in TSAC and decreases the bond strength of total TSAC. The suitable thickness for crossing passes shall be determined by procedure qualification test described in Sec 7.0 of this specification.

For manual spraying, spraying to be done in perpendicular crossing passes to minimize thin spots in coating. Approx. 75-100 microns of TSAC shall be laid down in each pass.

The surface geometry of the item or area to be sprayed should be inspected before application. The spraying pass and sequence shall be planned according to following.

- Maintain Gun as close to perpendicular as possible and within ± 30° from perpendicular to the substrate.
- Maintain nominal standoff distance and spray pass width as given below:

Spray method	Standoff (Inches)	Spray pass width
Arc Wire	6-8	1 ½ (40mm)
Flame Wire	5-7	¾ (20mm)

4.4.1 Rust Bloom (Visual appearance of rust or Discoloration)

If Rust bloom appears on the blasted surface before thermal spraying, the affected area shall be reblasted to achieve the specified level of cleanliness.

If Rust bloom in form of discoloration, or any blistering or a degraded coating appears at any time during application of TSAC, then spraying shall be stopped and acceptable sprayed area shall be marked off. The unsatisfactory areas shall be repaired to the required degree of surface cleanliness and profile.

Blast the edges of the TSAC to provide for 2-3" feathered area overlap of the new work into existing TSAC.

Then apply TSAC to the newly prepared surfaces and overlap the existing TSAC to the extent of feathered edge so that overlap is a consistent thickness.

4.4.2 Masking

Masking all those parts and surfaces which are not required to be thermally sprayed as instructed by purchaser should be inspected by applicator to ensure that they are properly marked and covered by purchaser.

Complex geometries (flanges, valve manifolds, intersections) shall be masked by applicator to minimize overspray i.e. TSAC applied outside spray parameters (primarily gun to substrate distance and spray angle).

4.4.3TSAC Finish

The deposited TSAC shall be uniform without blisters, cracks, loose particles, or exposed steel as examined with 10 X magnification.

5.0 SEALER

Sealant shall be applied after satisfactory application of TSAC and completion of all testing and measurements of the finished TSAC as per Sec 6.0 of this specification.

For shop work Sealer shall be applied immediately after thermal spraying and for field work sealer shall be applied within 8 hours. The sealcoat shall be thin enough to penetrate into the body of TSAC.

The sealant shall be Silicone Alkyd Aluminum paint having OFT not more than *3540* micron. Typically seal coat shall be applied at a spreading rate resulting in theoretical 38 microns OFT. The seal coat shall be applied in accordance with SSPC-PA 1 and the paint manufacturer instruction for sealing.

6.0 TESTING AND MEASUREMENT SCHEDULE

6.1 Surface Finish

That the blasted cleaned surface meets the required criteria (NACE 1/SSPC-SP 5) shall be visually inspected using SSPC-VIS 1. The clear cellophane-tape test as per ISO 8502-3 shall be used to confirm absence of dust or foreign debris on the cleaned surface. Checks shall be done on each component at least once per 200 m2 of blasted surface and minimum of 3 checks per shift.

6.2 **Blast Profile Measurement**: (In-Process testing during actual production before application of TSA coating)

The angular profile depth measurement shall be done by profile tape as per method NACE Standard RP 0287 or ASTM 0 4417 method B (Profile depth gauge micrometer). Spot measurement shall be carried out every 15m2 of blasted surface. At each spot three measurements shall be taken over an area of 10 cm2 and average of measurements to be recorded and reported.
If profile is <65 microns blasting shall continue till greater than 65 microns depth profile is achieved.

6.3 TSAC Thickness (In-Process Testing For finished coating during regular production)

6.3.1 TSAC finished thickness shall be measured using SSPC-PA 2 type 2 fixed probe gauge.

6.3.2 For flat surfaces, measurements shall be taken along a straight measurement line, one measurement line for every 15 m2 of applied TSAC shall be selected along which 5 measurements to be taken at 25 mm internal and average to be reported.

6.3.3 For curved surface or complex geometry, 5 measurements shall be taken at a spot measuring 10 cm2 in area. One spot to be taken for every 15 m2 of applied TSAC area.

6.3.4 The TSAC thickness in surface changes or contour changes, welds and attachments shall be also measured and reported.

6.3.5 If TSAC is less than specified minimum thickness, apply additional TSAC until specified thickness range is achieved.

6.3.6 All locations and values of TSAC thickness measurements shall be recorded in Job Record (JR).

6.4 Tensile Bond Testing (In-Process testing for finished coating during regular production)

- Tensile Bond strength of the TSAC finish coat shall be determined according to ASTM D 4541 using a self-aligning adhesion tester.

- One measurement shall be made every 50 m2• If tensile bond at any individual spot is less than 1 000 psi for flame sprayed coating and 1500 psi for arc sprayed coating the degraded TSAC shall completely removed and reapplied.

- The tensile bond portable test instrument to be calibrated according to ASTM C 633

6.5 Bend Tests

Bend test shall be carried out at beginning of each work shift. Bend tests shall also be conducted on sample coupons before start of thermal spraying work to qualify the following as mentioned earlier in this specification.

- To qualify spray parameters and thickness of each crossing pass.

6.5.1 Test Procedure

a) Five corrosion control steel coupons each of dimension 50 mm x 150 mm x 1.3 mm thk. to be prepared.

b) Surface shall be prepared by dry abrasive blast cleaning as per this specification.

c) TSAC shall be applied as per specified thickness range. TSAC should be sprayed in crossing passes lying down approx. 75-100 microns in each pass.

d) TSAC applied coupons shall be bent 180 ° around a 13 mm diameter mandrel.

e) Bend test shall be considered passed if on bend radius there is

- No cracking or spalling or lifting by a knife blade from the substrate
- Only minor cracking that cannot be lifted from substrate with a knife blade.

f) Bend test fails if coating cracks with lifting from substrate.

6.6 Tests for blasting media, blasting air

6.6.1 Blasting Media (For every fresh batch of media and one random test during blasting)

Blasting Media shall be visually inspected for absence of contamination and debris using 10 X magnification.

a. Inspection for the absence of oil contamination shall be conducted using following procedure:

- Fill a small clean 200 ml bottle half full of abrasive.
- Fill the bottle with potable water, cap and shake the bottle.
- Inspect water for oil film/slick. If present, the blasting media is not to be used.

b. Soluble salt contamination if suspected shall be verified by method ASTM D 4940. If present, media to be replaced.

c. Clean blasting equipment, especially pot and hoses, and then replace blasting media and retest.

6.6.2 Test for Blasting Air (Once Daily before start of blasting and once at random during blasting)

The air for blasting shall be free from moisture and oil. The compressor air shall be checked for oil and water contamination per ASTM D 4285.

6.7 Test for presence of oil/grease and contamination

The steel substrate after degreasing as per SSPC-SP I shall be tested as per following procedure to validate absence of oil and grease contamination.

a) Visual inspection - Continue degreasing until all visible signs of contamination are removed.
b) Conduct a solvent evaporation test by applying several drops or a small splash of residue-free trichloromethane on the suspect area especially pitting,

crevice corrosion areas or depressed areas. An evaporation ring formation is indicative of oil and grease contamination.
Continue degreasing and inspection till test is passed.

7.0 TSAC APPLICATOR QUALIFICATION

Following tests to be carried out as part of procedure qualification test for the applicator.

- Thickness measurement
- Coating bond strength
- Porosity test
- Bend strength

TSAC applicator's surface finishing and application process and equipment set up, calibration and operation shall be qualified by application of TSA on a reference sample which shall be used as a comparator to evaluate the suitability of application process. Only that applicator will be permitted to carry out the work when test specimens coated by the applicator meets the desired requirements as cited below.

The sample shall be made of a steel plate measuring approx. 18"x 18" x *W'* thick. If the actual work is less than *W'* thick then the sample to be made from material of representative thickness.

The surface preparation, TSAC application shall be made with actual field equipments and process/spray parameters and procedures as per the specification. The depth profile of blasted surface, TSAC coating thickness for each cross pass and total thickness range shall be as per specification.

The surface preparation and thermal spraying shall be carried out in representative environmental conditions spraying with makeshift enclosure.

7.1 After application of coating, thickness and tensile bond measurements shall be made in following manner.

- Divide the sample piece into four quadrants.

- Measure thickness along the diagonal line of each quadrant.

- Four each quadrant five in-line thickness measurements at I" interval shall be done using SSPC-J>A 2 type 2 fixed probe gauge. Thus a total of four...five in line" thickness measurements to be done for the whole sample.

- One tensile bond measurement using ASTM D 4541 type III or IV portable self aligning test instrument to be done at centre of each quadrant. Total of 4 measurements for the sample.

- One porosity evaluation test by Metallographic examination shall be conducted to demonstrate the achievement of porosity within the limits specified. Sample shall be prepared for Metallographic examination as per ASTM E- 3.

- The procedure shall be considered qualified if thickness and tensile-bond strength and porosity values meet the specification requirement.

7.2 Bend test: Bend test shall be carried out as detailed at sec. 6.5 of this specification.

Applicators thermal spray equipment set-up, operation and procedure of application including in-process QC checkpoints adopted during procedure qualification as described above should be always subsequently followed during entire duration of work.

8.0 DOCUMENTATION

The following information shall be provided by TSAC applicator before award of work.

- TSAC application process consisting of equipment capabilities and their technical parameters, feed stock material and source of procurement.

- Detailed application procedure and in-process quality control check points for (a) surface preparation (b) thermal spraying (c) seal coats.

- Type and specification of instruments to be deployed for measurement of blast profile depth, TSAC thickness and tensile bond.

- Paint manufacturer data sheet for the selected sealing coat to be applied.

9.0 RECORDS

The TSAC applicator shall maintain job record to record production and QC information. All the results of the tests and quality control checks shall be entered in the record for each component/part thermally sprayed. All the result of tests (thickness, tensile bond, bend tests) and other validation tests (e.g. Procedure qualification test, test for surface cleanliness after abrasive blasting, test for cleanliness of abrasives and air) shall also be recorded and duly signed by owner.

All the information mentioned in Sec 8.0 above should also form part of the Job record.

Any modification affected after procedure qualification in the procedure, QC, spray parameter, equipment spec to the original information (submitted before award of the work) must also form part of Job record.

10.0 WARRANTY

The TSAC applicator shall warrant the quality of material used by providing the purchaser with a certificate of materials used to include

a. Spray feed stock: Alloy type/designation, Lot Number, wire diameter, chemical analysis, name of supplier, manufacturer.

b. Sealant: Name of manufacturer, application data sheet.

11.0 SAFETY

The TSAC applicator shall follow all safety procedures required by the purchaser/owner. Owner shall also give compliance requirement to be followed by applicator. The applicator shall follow all appropriate regulatory requirements.

12.0 CODES AND STANDARDS

This specification shall apply in case of conflict between specification and following applicable standards:

AWS C.2.17	Recommended Practice for Electric are Sprayu
ASTM C 633	Test Method for Adhesive/Cohesive Strength of Flame Sprayed Coatings
ASTM D 4285	Method for indicating Oil or Water in Compressed Air
ASTM D 4417	Test Method for Field Measurement of Surface Profile of Blasted Steel
BS 2569	Specification of Sprayed Metal Coating
NACE Standard RP 0287	Field Measurement of Surface Profile of Abrasive Blast Cleaned Steel Surfaces Using a Replica Tape
ASTM D 4541	Test method for Pull-Off Strength of Coating Using Portable Adhesion Testers
ANSI/A WS C2.18	Guide for the Protection of Steel with Thermal Spray Coatings of Aluminum, Zinc and their Alloys and Composites.
NACE No. 12/AWS C2.23M/SSPC-CS 23.00	Specification for the application of thermal spray coatings (Metallizing) of aluminum, zinc and their alloys and composites for the corrosion protection of steel.
SSPC Publication	The inspection of coatings and linings : A Handbook of Basic practice for Inspectors, Owners, and Specifiers
SSPC-AB 1	Mineral and Slag Abrasives
SSPC-AB 3	Ferrus Metallic Abrasives
SSPC-PA 1	Shop, Field and Maintenance Painting of Steel
SSPC-PA 2	Measurement of Dry Coating Thickness with Magnetic Gages
NACE No. 1/SSPC-SP 5	White Metal Blast Cleaning
NACE No. 2/SSPC-SP 10	Near – White Metal Blast Cleaning

SSPC-VIS 1	Guide and Reference Photographs for Steel Surfaces prepared by Dry Abrasive Blast Cleaning

SPECIFICATION
FOR
FABRICATION AND ERECTION
OF PIPING

3	26.11.19	Revision due to change of organization name and issued for implementation.	RL	PP	RK
Rev.	**Date**	**Description**	**Prpd.**	**Chkd.**	**Appd.**

CONTENTS

1.0	SCOPE	4
2.0	SCOPE OF WORK OF CONTRACTOR	4
3.0	BASIS OF WORK	6
4.0	FABRICATION	7
5.0	ERECTION	11
6.0	HEALTH,SAFETY & ENVIRONMENT CONSIDERATIONS	15

1.0 SCOPE

This specification covers general requirement of fabrication and erection of above ground and trench piping system at site. The specification covers the scope of work of contractor, basis of work to be carried out by contractor and standards, specifications and normal practice to be followed during fabrication and erection by the contractor.

2.0 SCOPE OF WORK OF CONTRACTOR

Generally the scope of work of contractor shall include the following :

2.1 Transportation of required piping materials (as described in Cl. 2.1.1), pipe support material (as described in Cl. 2.3) and all other necessary piping materials from owner's storage point or contractor's storage point (in case of contractor's scope of supply) to work site / shop including raising store requisitions for issue of materials in the prescribed format and maintaining an account of the materials received from owner's stores.

2.1.1 Piping materials include the following but not necessarily limited to the same.

a. Pipes (All sizes and schedules)
b. Flanges (All sizes, types and pressure ratings)
c. Fittings (All sizes, types and schedules)
d. Valves (All sizes, types and Ratings)
e. Gaskets (All sizes, types and Ratings)
f. Bolts, Nuts or M/C Bolts.
g. Expansion Joint / Bellows
h. Speciality items like online filters, ejectors, sample cooler, steam traps, etc.
i. On line instruments like control valve, orifice flange, rotameter, safety valves etc.

2.2 Shop and field fabrication and erection of piping in accordance with documents listed under Clause 3.0 i.e. „BASIS OF WORK" including erection of all piping materials enumerated above.

2.3 Fabrication and erection of pipe supports like shoe, saddle, guide, stops, anchors, clips, cradles, hangers, turn buckles, supporting fixtures, brackets, cantilevers, struts, tee posts including erection of spring supports and sway braces.

2.4 a. Fabrication of piping specials likes special radius bends, reducers, mitres etc.

b. Fabrication of plain and threaded nipples from pipes as required during erection.

c. Fabrication of swage nipples as and when required.

d. Fabrication of odd angle elbow like 60 deg., 30 deg., or any angle from 90/45 deg. Elbows as and when required.

e. Fabrication of flange, reducing flange, blind flange, spectacle binds as and when required.

f. Fabrication of stub-in connection with or without reinforcement.

g. Grinding of edges of pipes, fittings, flanges etc. to match mating edges of uneven / different thickness, wherever required.

2.5 Modifications like providing additional cleats, extension of stem of valve, locking arrangement of valves etc. as and when required.

2.6 Preparation of Isometrics, bill of materials, supporting detail of all lines within the unit battery limit and get subsequent approval from Engineer-in-Charge as and when called for.

2.7 Obtaining approval for drawings prepared by contractor from statutory authority, if required.

2.8 Spun concrete lining of the inside pipes 3"NB and above including fittings and flanges as required, in accordance with specification.

2.9 Rubber lining inside pipes, fittings, flanges as and when required, in accordance with specification.

2.10 Radiography, stress relieving, dye penetration, magnetic particle test etc. as required in specification.

2.11 Casting of concrete pedestals and fabrication and erection of small structures for pipe supports including supply of necessary materials.

2.12 Providing insert plates from concrete structures and repair of platform gratings around pipe openings.

2.13 Making material reconciliation statement and return of owner's supply left over materials to owner's storage.

2.14 Flushing and testing of all piping systems as per standard specification for inspection, flushing and testing of piping systems (specification no. 03-TS-023).

2.15 Pickling (as and when applicable) as per relevant standards for chemical cleaning of C.S. suction piping of compressors.

2.16 Submission of job execution procedure for review and approval of Engineer-in-Charge covering all above activities.

2.17 Performing PMI using alloy analyzer as per standard specification for PMI at construction site.

3.0 BASIS OF WORK

3.1 The complete piping work shall be carried out in accordance with the following :-

a. "Approved for Construction" drawings, and sketches issued by the consultant to the contractor – Plans and / or Isometrics.

b. Drawings, sketches and documents prepared by contractor duly approved by consultant / Engineer-in-Charge (such as isometrics of small bore piping and offsites piping etc.)

c. Approved construction job procedures prepared by contractor as stipulated in 2.16.

d. Consultants specifications / documents as below :

i) Process and Instrument diagram.

ii) Piping Material Specification (03-TS-001)

iii) Piping support standards (03-TS-002)

iv) Line list

v) Piping support indices (only in offsites), if supports are not shown in PLAN.

vi) Specification for Examination of Piping Welding (03-TS-021)

vii) Specification for Welding of Piping-General (03-TS-018)

viii) Specification for welding of carbon steel piping (03-TS-019)

ix) Specification for welding of stainless steel piping (03-TS-020)

x) Any other specifications attached with Piping Material Specification or special condition of contract (such as standard for cement lining of pipe, standard of jacketed piping, standard for steam tracing, Dimensional Tolerances etc.)

xi) Procedure of storage, prevention & positive identification of material at contractor works / site.

e. Following codes, standards and regulations :

a. ASME B 31.3	:	Process Piping
b. ASME B 31.8	:	Codes for Gas Transmission and Distribution Piping Systems
c. ASME SEC. VIII	:	Code for unfired pressure vessel.

d. IBR, 1950 : The Indian Boiler Regulations, 1950

e. IS : 823 : Code for procedure for Manual Metal arc welding of Mild Steel (for structural steel).

f. NACE STD. MR-01-75 : Code for Sour Services material requirement.

Note : All codes referred shall be latest edition, at the time of award of contract.

3.2 Deviations

Where a deviation from the "Basis of Work" and approved job procedure described above is required or where the basis of work does not cover a particular situation, the matter shall be brought to the notice of Engineer-in-Charge and the work carried out only after obtaining written approval from him in each case.

4.0 FABRICATION

4.1 Piping Material

Pipes, pipe fittings, flanges, valves, gaskets, studs, bolts etc. used in a given piping system shall be strictly as per the "Piping Material Specification" for the "Pipe Class" specified for that system. To ensure the above requirement, all piping material supplied by the owner / contractor shall have proper identification marks as per relevant standards & TES specifications. Contractor shall provide identification marks on left over pipe lengths wherever marked up pipe lengths have been fabricated / erected. Material traceability is to be maintained for AS, SS, NACE, LTCS, material for hydrogen service and other exotic material by way of transferring heat number etc. (hard punching) as per approved procedure. This shall be in addition to color coding for all piping material to avoid mix up

For the purpose of common understanding, the construction job procedure, to be submitted by the contractor, shall include proposal for

- Maximizing prefabrication, inspection and testing at fabrication shop with minimum field joints.
- Positive material identification, handling, storage and preservation.

4.2 Dimensional Tolerances

Dimensional tolerances for Fabricated Piping shall be as per standard 03-CS-002. The contractor shall be responsible for working to the dimensions shown on the drawings. However, the contractor shall bear in that there may be variations between the dimensions shown in the drawing and those actually existing at site due to minor variations in the location of equipments, inserts structures etc. To take care of these variations "Field Welds" shall be provided during piping fabrication. An extra pipe length of 100 mm over and above the dimensions indicated in the drawing may be left on one side of the pipe at each of the field

welds. During erection, the pipe end with extra length at each field weld, shall be cut to obtain the actual dimension occurring at site. Isometrics, if supplied may have the field welds marked on them. However, it is the responsibility of the contractor to provide adequate number of field welds. In any case, no extra claims will be entertained from the contractor on this account. Wherever error / omissions occur in the drawings and Bills of Materials it shall be the contractor's responsibility to notify the Engineer-in-Charge prior to fabrication or erection.

4.3 IBR Piping

4.3.1 Contractor shall be supplied generally with all drawings for steam piping falling under the purview of Indian Boiler Regulations. The contractor shall carry out the fabrications, erection and testing of this piping as per requirements of Indian Boiler Regulations and to the entire satisfaction of the local Boiler Inspectorate/Directorate. The contractor shall also obtain the approval of commanded CIB for all fabrication and testing done by him at his own cost. All certificates of approval shall be in proper IBR forms.

4.3.2 Approval of CIB on the drawings prepared by the contractor shall be obtained by the contractor at his own cost.

4.4 Pipe Joints

4.4.1 The piping class of each line specifies the type of 2" and above in process and utility piping shall be accomplished by butt welds. Joining of lines 1 – ½" welding / threaded joints as specified in "Piping Material Specifications". However, in piping 1 – ½" and below where socket welding / threaded joints are specified butt-welds may be used with the approval of Engineer-in-Charge for pipe to pipe joining in long runs of piping. This is only applicable for non-galvanized piping without lining.

4.5 Butt Welded and Socket Welded Piping

End preparation, alignment and fit-up of pipe pieces to be welded, welding, pre-heating, post heating and heat treatment shall be as described in the Specification for Welding of Piping – General (03-TS-018) and Specification for examination of piping welding (03-TS-021)

4.6 Screwed Piping

In general galvanized piping shall have threads as per IS 554 or ASME B2.1 NPT as required to match threads on fittings, valves etc. All other piping shall have threads as per ASME B2.1, tapered unless specified otherwise.

Threads shall be clean cut, without any burrs or stripping and the ends shall be reamed. Threading of pipes shall be done preferably after bending, forging or heat treating operations. If this is not possible, threads shall be gauge checked and chased after welding heat treatment etc.

During assembly of threaded joints, all threads of pipes and fittings shall be thoroughly cleaned of cuttings, dirt, oil or any other foreign matter. The male thread shall be coated with sealant and the joint tightened sufficiently for the threads to seize and give a leak proof joint.

Threaded joints to be seal-welded shall be cleaned of all foreign matter, including sealant and made up to full thread engagement before seal welding.

4.7 Flange Connections

All flange facings shall be true and perpendicular to the axis of pipe to which they are attached. Flanged bolt holes shall straddle the normal centerlines unless different orientation is shown in the drawing.
Wherever a spectacle blind is to be provided, drilling and tapping for the jackscrews in the flange, shall be done before welding it to the pipe.

4.8 Branch Connections

Branch connections shall be as indicated in the piping material specifications. For end preparation, alignment, spacing, fit-up and welding of branch connections refer welding specifications. Templates shall be used wherever required to ensure accurate cutting and proper fit-up.

For all branch connections accomplished either by pipe to pipe connections or by using forged tees the rates quoted for piping shall be inclusive of this work.

Reinforcement pads shall be provided wherever indicated in drawings / specifications etc.

4.9 Bending

Bending shall be as per ASME B31.3 except that corrugated or creased bends shall not be used.

Cold bends for lines 1. ½" and below, with a bend radius of 5 times the nominal diameter shall be used as required in place of elbows wherever allowed by piping specifications. Bending of pipe 2" and above may be required in some cases like that for headers around heaters, reactors etc.

The completed bend shall have a smooth surface, free from cracks, buckles, wrinkles, bulges, flat spots and other serious defects. They shall be true to dimensions. The flattening of a bend, as measured by the difference between the maximum and minimum diameters at any cross-section, shall not exceed 8% and 3% of the nominal outside diameter, for internal and external pressure respectively.

4.10 Mitre Bends and Fabricated Reducers

The specific application of welded mitre bends and fabricated reducers shall be governed by the piping material specifications. Generally all 90 deg. Mitres shall be 4 piece 3-weld type and 45 deg. Mitres shall be 3-piece 2-weld type as per TES standard unless otherwise specified. Reducers shall be fabricated as per directions of Engineer-in-Charge. The

radiographic requirements shall be as per Material Specifications for process and utility systems and NDT Specification. For steam piping under IBR, radiographic requirements of IBR shall be complied with.

4.11 Cutting and Trimming of Standard Fittings and Pipes

Components like pipes, elbows, couplings, and half couplings etc. shall be cut/trimmed/edge prepared wherever required to meet fabrication and erection requirements, as per drawings and instructions of Engineer-in-Charge. Nipples as required shall be prepared from straight length pipe.

4.12 Galvanized Piping

Galvanized carbon steel piping shall be completely cold worked, so as not to damage galvanized surfaced. This piping involves only threaded joints and additional external threading on pipes may be required to be done as per requirement.

4.13 Jacketed Piping

The Jacketing shall be done in accordance with TES specification and as suggested in material specification or special condition of contract.

Pre-assembly of jacketed elements to the maximum extent possible shall be accomplished at shop by Contractor. Position of jump over and nozzles on the jacket pipes, fittings etc. shall be marked according to pipe disposition to those shall be prefabricated to avoid damaging of inner pipe and obstruction of jacket space. However, valves, flow glasses, in line instruments or even fittings shall be supplied as jacketed.

4.14 Shop Fabrication / Pre-Fabrication

The purpose of shop fabrication or pre-fabrication is to minimize work during erection to the extend possible. Piping spool, after fabrication, shall be stacked with proper identification marks, so as to facilitate their withdrawal at any time during erection. During this period all flange (gasket contact faces) and threads shall be adequately protected by coating with are movable rust preventive. Care shall also be taken to avoid any physical damage to flange faces and threads.

4.15 Miscellaneous

4.15.1 Contractor shall fabricate miscellaneous elements like flash pot, seal pot, sample cooler, supporting elements like turn buckles, extension of spindles and interlocking arrangement of valves, operating platforms as required by Engineer-in-Charge.

4.15.2 Spun concrete Lining

The work of inside spun concrete lining of pipes and specials of diameter 3” and above shall be done as per material specifications and special condition of contract. Pipes shall be fabricated at site as and when required as per the relevant specifications and the actual piping material specification.

5.0 ERECTION

5.1 Cleaning of piping before Erection

Before erection all pre-fabricated spool places, pipes, fittings etc. shall be cleaned inside and outside by suitable means. The cleaning process shall include removal of all foreign matter such as scale, sand, weld, spatter chips etc. by wire brushes, cleaning tools, etc. and blowing with compressed air or flushing out with water. Special cleaning requirements for some services, if any shall be as specified in the piping material specification or isometric or line list. SS. jacketed piping requiring pickling shall be pickled to remove oxidation and discoloring due to welding.

5.2 Piping Routing

No deviations from the piping route indicated in drawings shall be permitted without the consent of Engineer-in-Charge.

Pipe to pipe, pipe to structure / equipments distances / clearances as shown in the drawings shall be strictly followed as these clearances may be required for the free expansion of piping / equipment. No deviations from these clearances shall be permissible without the approval of Engineer-in-Charge.

In case of fouling of a line with other piping, structure, equipment etc. the matter shall be brought to the notice of Engineer-in-Charge and corrective action shall be taken as per his instructions.

5.3 Slopes

Slopes specified for various lines in the drawings / P & ID shall be maintained by the Contractor. Corrective action shall be taken by the Contractor in consultation with Engineer-in-Charge wherever the Contractor is not able to maintain the specified slope.

5.4 Expansion Joints / Bellows

Installation of Expansion Joints / Bellows shall be as follows :

5.4.1 All expansion joints / bellows shall be installed in accordance with the specification and installation drawings, supplied to the Contractor.

5.5.2 a) Upon receipt, the Contractor shall remove the Expansion Joints / Bellows from the case(s) and check for any damage occurred during transit.

b) The contractor shall bring to the notice of the Engineer-in-Charge any damage done to the bellows / corrugations, hinges, tie-rods, flanges / welds ends etc.

c) Each expansion Joint / Below shall be blown free of dust / foreign matter with compressed air or shall be cleaned with a piece of cloth.

5.5.3 a) For handling and installation of Expansion Joints, great care shall be taken while aligning. An Expansion Joint shall never be aligned from bellows corrugations / external shrouds, tie rods, angles.

b) An expansion joint / bellow shall preferably be aligned from the end pipes / flanges or on the middle pipe.

5.5.4 a). All expansion joints shall be delivered to the contractor at 'Installation length' maintained by means of shipping rods, angles welded to the flanges or weld ends or by wooden or metallic stops.

b) Expansion Joints stop blocks shall be carefully removed after hydrostatic testing. Angles welded to the flanges or welds ends shall be trimmed by saw as per manufacturer's instructions and the flanges or weld end shall be ground smooth.

5.5.5 a) The pipe ends in which the Expansion Joint is to be installed shall be perfectly aligned or shall have specified lateral deflection as noted on the relevant drawings.

b) The pipe ends / flanges shall be spaced at a distance specified in the drawings.

5.5.6 The expansion joint shall be placed between the mating pipe ends / flanges and shall be tack welded / bolted. The mating pipes shall again be checked for correct alignment.

5.5.7 Butt-welding shall be carried out at each end of the expansion joint. For flanged Expansion Joint, the mating flanges shall be bolted.

5.5.8 After the expansion joint is installed the Contractor shall ensure that the mating pipes and Expansion Joints are in correct alignment and that the pipes are supported and guided.

5.5.9 The joint shall not have any lateral deflection. The contractor shall maintain parallelism of restraining rings or bellows convolutions.

5.5.10 Precautions

a) For carrying out welding, earthing lead shall not be attached with the Expansion Joint.

b) The expansion bellow shall be protected from arc weld spot and welding spatter.

c) Hydrostatic Testing of the system having Expansion Joint shall be performed with the shipping lugs in position. These lugs shall be removed after testing and certification is over.

5.6 Flange Connections

While fitting up mating flanges, care shall be exercised for trueness, so that faces of the flanges can be pulled together, without inducing any stresses in the pipes and the equipment nozzles. Extra care shall be taken for flange connections to pumps, turbines, compressors, cold boxes, air coolers etc. The flange connections to these equipments shall be checked for misalignment,

excessive gap etc. after the final alignment of the equipment is over. The joint shall be made up after obtaining approval of the Engineer-in-Charge.

Temporary protective covers shall be retained on all flange connections of pumps, turbines, compressors, and other similar equipments, until the piping is finally connected, so as to avoid any foreign material from entering these equipments.

The assembly of a flange joint shall be done is such a way that the gasket between these flange faces is uniformly compressed. To achieve this the bolts shall be tightened in a proper sequence. All bolts shall extend completely through their nuts but not more than ¼".

Steel to C.I. flange joints shall be made up with extreme care, tightening the bolts uniformly after bringing flange flush with gaskets with accurate pattern and lateral alignment.

5.7 Vents and Drains

High point vents and low point drain shall be provided as per the instructions of Engineer-in-Charge, even if these are not shown in the drawings.

The size and rating of vent and drain connections shall be as per piping material specification. Size of vent and drain valve shall be chosen in accordance with the characteristics of the liquid. In any case, these will not be less than :

5.8 Valves

Valves shall be installed with spindle / actuator orientation / position as shown in the layout drawings. In case of any difficulty in doing this or if the spindle orientation / position is not shown in the drawings, the Engineer-in-charge shall be consulted and work done as per his instructions. Care shall be exercised to ensure that globe valves, check valves and other unidirectional valves are installed with the Flow Direction arrow" on the valve body pointing in the correct direction. If the direction of the arrow is not marked on such valves, this shall be done in the presence of Engineer-in-Charge before installation.

Fabrication of stem extensions, locking arrangements and interlocking arrangements of valves (if called for), shall be carried out as per drawings / instructions of Engineer-in-Charge.

5.9 Instruments

Installation of in-line instruments such as restriction orifices, control valves, safety valves, relief valves, rotameters, orifice flange assembly, venturimeters, flowmeters etc. shall form part of piping erection work.

Fabrication and erection of piping upto first block valve / nozzle / flange for installation of offline Instruments for measurement of level, pressure, temperature, flow etc. shall also form part of piping construction work. The limits of piping and instrumentations work will be shown in drawings / standards / specifications. Orientations / locations of take-offs for temperature, pressure, flow, level connections etc. shows in drawings shall be maintained.

Flushing and testing of piping systems which include instruments mentioned above and the precautions to be taken are covered in inspection, flushing & testing piping spec. no. 03-B-023. Care shall be exercised and adequate precautions taken to avoid damage and entry of foreign matter into instruments during transportation, installation and testing, etc.

5.10 Line Mounted Equipment / Items

Installation of line mounted items like filters, strainers, steam traps, air trap, desuperheaters, ejectors, samples coolers, mixers, flame arrestors, sight glasses, etc. including their supporting arrangements shall form part of piping erection work.

5.11 Bolts and Nuts

The contractor shall apply molycoat grease mixed with graphite powder (unless otherwise specified in piping classes) on all bolts and nuts during storage, after erection and wherever flange connections are broken and made-up for any purpose whatsoever. The grease and graphite powder shall be supplied by the Contractor within the rates for piping work.

5.12 Pipe Supports

Pipe supports are designed and located to effectively sustain the weight and thermal effects of the piping system and to prevent its vibration / dislocation. Contractor shall locate and design pipe supports in line with TES standards and obtain approval of TES / Engineer-in-Charge on drawings prepared by Contractor, before erection. However, any extra supports desired by Engineer-in-Charge shall also be installed.

No pipe shoe / cradle shall be offset unless specifically shown in the drawings.

Hanger rods shall be installed inclined in a direction opposite to the direction in which the pipe move during expansion.

Present pins of all spring supports shall be removed only after hydrostatic testing and insulation is over. Springs shall be checked for the range of movement and adjusted if necessary to obtain the correct positioning in cold condition. These shall be subsequently adjusted to hot setting in operating condition. The following points shall be checked after installation with the Engineer-in-Charge and necessary confirmation in writing obtained certifying that :

- All restraints have been installed correctly.
- Clearances have been maintained as per support drawings.
- Insulation does not restrict thermal expansion.
- All temporary tack welds provided during erection have been fully removed.
- All welded supports have been fully welded;

6.0 HEALTH, SAFETY & ENVIRONMENT CONSIDERATIONS

6.1 First-Aid Method

6.1.1 Proper arrangement for first-aid shall be provided to attend accidental injuries at the work site. The extent of the arrangement shall be in compliance with the rules framed under the "Building and other Construction Workers (Regulation of Employment and Conditions of Service) Act 1996 which are applicable to the construction site.

6.1.2 However, minimum following first-aid items shall be available at the construction site all the time during currency of the work. First-aid trained personnel will be available to administer the first-aid to the injured till regular medical facility is provided.

First-aid Items

1	Eye Wash Bottles	7	Aspirin on any other analgesic
2	Eye drops	8	Roller & Triangular bandages
3	Sterilized dressings	9	Tourniquet
4	Antiseptic Solution	10	Safety Pins
5	Adhesive plasters	11	Kidney Tray
6	Sterilized eye pads	12	Snake bite lancet

6.2 Personal Protection

6.7.5 Head Protection

i. All personnel shall be issued with safety helmets. Safety helmets should be worn at all times when the personnel are at construction site.

ii. Safety helmets should be checked periodically by the user and if found damaged or with sign of wear they should be replaced.

6.2.2 Hand Protection

i. Appropriate gloves should be worned for the hazard present by personnel involved in works where hands are exposed to harmful substances, cuts, burns etc.

6.2.3 Foot Protection

i. All personnel shall be issued with suitable hard toe footwear which should be worn by all personnel considering the nature of works and danger of foot injuries due to falling objects, rolling objects, object piercing the sole or electrical hazards.

6.2.4 Ear Protection

i. Ear protection appliances such as earplug or earmuff should be worn by personnel involved in works in areas of high noise levels, or when working with equipment that generate high noise levels. Selection of the correct type shall mainly depend upon the nature and source of the noise, level of noise and pitch of noise.

6.7.5 Eye Protection

i. Safety glasses with rigid side shields should be worn at all times when in construction environment and in areas where eye hazards exist due to flying particles, dust ingress, chemical splash, and radiation glare, harmful vapors etc. Face shields must be worn in conjunction with safety glasses when grinding, chipping etc.

ii. The correct selection of eye protection shall depend on the assessment of the risk, or combination of risks based on the site situation.

iii. Stonebreakers shall be provided with protective goggles.

6.7.5 Respiratory Protection

i. When it is not possible or feasible to render an environment free from any form of air contaminants like dusts, fumes, etc. and/or with proper oxygen level (20%), it shall be essential to protect the individual worker with the proper type of respiratory protection equipment such as dust mask, canister/cartridge type masks, air-line respirator or self-contained breathing apparatus.

ii. Self-contained breathing apparatus (SCBA) shall be used in emergency situations, while scheduled works shall utilize different type of breathing apparatus.

iii. Respiratory protective devices are of various types and work on different principles. It is therefore essential that the same should be selected after careful consideration of the hazards involved so that it will give the desired protection.

6.3 Fall Protection

6.3.1 While working at an unprotected elevation (not protected by approved handrails, guardrails, etc.) of more than 3 meters, use of suitable safety belt by the worker should be mandatory.

6.7.5 Where use of safety belt is not practicable, safety net should be provided below the working area to arrest the worker falling accidentally.

7.3.3 Worker should be well trained on usage of safety belt including its proper usage at the time of ascending / descending.

6.3.4 As far as practicable, guardrails and toe-boards should be provided to protect workers from falling from elevated workplaces.

6.3.5 All openings through which workers are liable to fall should be kept effectively covered orfenced and displayed prominently.

6.3.6 Elevated workplaces including roofs should be provided with safe means of access and egress such as stairs, ramps or ladders. If the job is on fragile/sloping roof, roof walk ladders should be used.

6.4 Fall of Object

6.4.1 Precautions should be taken to protect any person against injury by the fall of materials, or tools or equipment being raised or lowered.

6.4.2 The areas where hazard of falling objects exist should be barricaded against entry of unauthorized persons and proper safety signboards should be displayed.

6.4.3 All tools should be carried in proper tool kits to avoid their falling.

6.5 Scaffolding & Staging

6.5.1 Where work cannot be safely at any elevated location, a well-designed scaffold should be provided with safe means of access, such as stairs, ladders or ramps.

6.5.2 Every scaffold should be constructed, erected and maintained so as to prevent collapse or accidental displacement when in use.

6.5.3 Appropriate hand railings should be provided on the top of all working platforms. Entry to scaffolding should be restricted.

6.5.4 Scaffolding shall be properly designed and erected, with its intended use in mind, where additional, anticipated loads are to be applied, the structure shall be redesigned and modified accordingly.

6.5.5 Bamboo and wooden scaffolding is prohibited. Only pipe scaffolding in good condition should be permitted.

6.5.6 Erection, alteration and removal of scaffolding should be done under supervision of experienced personnel.

6.7.5 For carrying out work at heights exceeding 2m or more and near opening in floors, roofs etc., the following precautions shall be observed.

i. All workers engaged in above work shall be experienced in carrying out such work. Workers involved in erection of scaffold, staging etc. must use safety belt with double lanyard.

ii. Staging shall be provided with steel scaffolding pipes throughout its length at waist height and on each open side.

iii. Staging supports shall be of steel pipes safely secured and supported on firm level footings or slung from overhead beams. The supports shall be located at a distance of not more than 8ft. apart and the staging shall be secured to each support properly.

iv. Even after completion of concrete work, concrete formwork shall be frequently inspected to prevent collapsing before due date.

v. Whenever it is not possible to put up a staging and/or use a safety belt, safety nets shall be slung beneath the place of work.

vi. The engineer shall have the right to reject any staging or scaffolding considered by him as unsafe and requires the Contractor to effect necessary improvement before using such staging or scaffolding.

6.6 Ladders

6.6.1 Ladders should be erected in the "four up-one out position" and should be securely lashed with the structure and non-slip devices should be used.

6.6.2 Using, such as, rubber shoes or pointed steel ferules at the ladder foot, rubber wheels at ladder top, fixing wooden battens, cleats etc.

6.6.3 When ladder is used for climbing over a platform, the ladder must be of sufficient length, to extend at least one meter above the platform.

6.6.4 Portable ladders should be used for heights not more than 4m above 4m flights, fixed ladders should be provided with at least 600 mm landings at every 6mt or less.

6.6.5 The width of ladder should not be less than 300mm and rungs should be spaced not more than 300mm.

6.7 Working Platform

6.7.1 All works to be carried out over water or at a height greater than 2m above the ground level, must be performed from a properly constructed and maintained working platform. Safe access to all points of work should be provided in the form of suitable ladders/stairways located at appropriate interval, which should not be more than 15m. Each supporting member of platform should be securely fastened and braced

6.7.2 All working platforms shall be kept clean and free from grease, oil rubble, debris or rubbish to ensure safe movement for personnel performing the works.

7.7.3 The height of the mobile platform shall not be greater than (3 times) the shorter base dimension. Mobile tower scaffolding shall be fitted with lockable wheels.

6.7.4 Use of barrels, boxes, loose bricks etc., for supporting platform should not be permitted.

6.7.5 Where planks are butt-joined, two parallel putlogs should be used, not more than 100mm apart, to give support to each plank.

6.7.6 Platform plank should not project beyond its end support to a distance exceeding 4 times the thickness of plank, unless it is effectively secured to prevent tipping. Cantilever planks should be avoided.

6.7.7 The platform edges should be provided with 150mm high toe board to eliminate hazards of tools or other objects falling from platform.

6.8 Lighting

6.8.1 Where natural lighting is not adequate, working light fittings or portable hand-lamps should be provided at workplace on the construction site where a worker will do a job.

6.8.2 Emergency lighting should be provided for personnel safety during nighttime to facilitate standby lighting source, if normal system fails.

6.8.3 The cables of portable electrical lighting equipment should be of adequate size & having characteristics for the power requirements and of adequate mechanical strength to withstand severe conditions in construction operations.

6..9 Hand Tool

6.9.1 Heads of hammers and other shock tools should be dressed of ground to a suitable radius on the edge as soon as they begin to mushroom or crack.

6.9.2 Sharp tools should be kept in sheaths, shields, chests or other suitable containers when not in u use and while they are carried or transported.

6.9.3 Non-sparking tools should be used near or in the presence of flammable or explosive dusts or vapours.

6.10 Pneumatic Tools

6.10.1 Pneumatic shock tools should be equipped with safety clips or retainers to prevent dies and tools from being accidentally expelled from the barrel.

6.11 Electrically Operated Hand Tools

6.11.1 All electrically operated hand tools will be periodically inspected and properly earthed. Following precautions shall be taken while using these tools:

a. Use of lighting circuits for portable tools shall not be permitted.
b. Portables tools shall not be used near flammable vapor or gases.
c. All equipment shall be suitably earthed.
d. All tools shall be checked to ensure the supplied voltage is comparable to the machine"s design.
e. Electrical leads and connections shall be inspected for signs of damage or wear, and repaired or replaced accordingly.
f. At no time shall two or more power tools be connected to a single power plug.

6.11.2 Before any electrical equipment to any power source belonging to the owner is taken, the supervisor must:

i. Satisfy the company's engineer that the equipment is in good conditions

ii. Inform the company's engineer in writing of the maximum current required and the voltage and phase of the equipment

iii. Obtain the written permission of the engineer detailing the power sourced, to which the equipment may be connected

iv. Satisfy the engineer that the cabling to all equipment are adequate sizes of the power required, have earth conductors in addition to metallic armoring overalls and fitted with suitable connections satisfy the engineer that any electrical distribution system, which is proposed to be installed, and any electrical equipment, which is proposed to be used will not endanger either person or property.

6.12 Cutting and Welding

Common hazards involved in welding/cutting are sparks, molten metal, flying particles, harmful light rays, electric shocks etc. Following precautions should be taken: -

i. A dry chemical type fire extinguisher should be made available in the work area.

ii. Adequate ventilation should be ensured by opening manholes and fixing a shield or forced circulation of air etc, while doing a job in confined space.

iii. Approved and well-maintained apparatus, such as torches, manifolds, regulators or pressure reducing valves, and acetylene generators should be used.

iv. The work piece should be connected directly to Power supply, and not indirectly through pipelines/structures/equipments etc.

v. Acetylene cylinder should be turned and kept in such a way that the valve outlet points away from oxygen cylinder.

vi. Acetylene cylinder key for opening valve should be kept on valve stem, while cylinder is in use, so that the acetylene cylinder could be quickly turned off in case of emergency. All types of cylinders, whether full or empty, should be stored at cool, dry place under shed.

vii. Cylinders that are heavy or difficult to carry by hand should be rolled on their bottom edge but they should never be dragged.

viii. Before changing torches, shut off the gas at the pressure reducing regulators.

ix. Hoses are free from burns, cuts and cracks and properly clamped should be ensured.

x. Welding sets should be certified by the company's electrical engineer before start of work and should get renewed periodically, if required.

xi. The length of supply cable to welding set should not exceed 5 meters and the body of the welding set shall be properly earthed.

xii. A naked flame should not be applied to any part of the cylinder or hose arrangement to detect leaks.

xiii All gas and oxygen regulators should be fitted with flashback arresters

6.13 Environment Protection

6.13.1 Waste Disposal

a. Metals, plastics, masonry, etc. are the major wastes of the construction site. They should be handled in such a way so that pollution and hazards are minimized. Wastes are:

i. Handled and disposed off without causing danger to safety of a person

ii. Not allowed to accumulate to constitute a hazard

iii. To be kept sufficiently moist (if they are debris) to avoid dust dispersion in the environment

iv. Not thrown inside or outside from any height

b. Materials like plastics, metals (containers, pipe pieces, sheets, etc.), lubricating oil, fuel oil, etc. can be recycled whereas masonry wastes can be reused to fill the ground where needed.

6.13.2 Noise Protection

i. Appropriate PPE such as earplug, earmuff etc. should be provided to the persons who work or are stationed near the area where noise is produced at excessive decibel level.

ii. Where possible, silencer should be used in the vents creating excessive noise e.g. earth moving equipment.

STANDARD SPECIFICATION FOR NON DESTRUCTIVE EXAMINATION REQUIREMENTS OF PIPING

PROJECT : MRPL BS VI PROJECT

CLIENT : MRPL

LOCATION : MANGALORE

JOB NO. : B038

Abbreviations:

DP/LP	**:**	**Dye / Liquid Penetrant**
MP	**:**	**Magnetic Particle**
CS	**:**	**Carbon Steel**
AS	**:**	**Alloy Steel**
SS	**:**	**Stainless Steel**
ASTM	**:**	**American Society for testing & Materials**
ASME	**:**	**American Society of Mechanical Engineers**
IBR	**:**	**Indian Boiler Regulations**
PMS	**:**	**Piping Material Specification**

CONTENTS

1.0 GENERAL ……4

2.0 VISUAL EXAMINATION……..4

3.0 NON DESTRUCTIVE EXAMINATION ……..6

4.0 TABLE – 1 (with applicable Notes to Table-1……..7

1.0 GENERAL

1.1 Scope

This specification covers the general requirements for non destructive examination of shop & field fabricated piping.

1.2 Related Codes & Engineering Standards

Referred codes / standards are as follows. Latest editions of the Codes/Standards referred to shall be followed.

a) ASME Boiler & Pressure Vessel Codes, Section V & VIII (Div.1) including addenda.

b) ASME B31.3

c) ASME B16.5

d) ASME B16.34

e) Job Standard Piping Material Specification, B038-6-44-0005

f) Welding Specification Charts for Piping Classes, B038-000-79-41-WSC-01

g) Standard Specification for Fabrication & Erection of Piping 6-44-0012

h) ASTM E10

i) Welding Specification for Fabrication of Piping, 6-77-0001

j) Design Guide for Radiography Requirements, 8-77-0010

k) indian Boiler Regulations (IBR)

2.0 VISUAL EXAMINATION

2.1 Weld shall be visually inspected wherever accessible in accordance with the following requirements:

a)	Internal misalignment	1.5 mm or less
b)	Cracks or lack of fusion	not permitted
c)	Incomplete penetration	Depth shall not exceed the lesser of 0.8mm or 0.2 times thickness of thinner component joined by butt-weld. The total length of such imperfections shall not exceed 38 mm in any 150 mm of weld length.
d)	Surface porosity exposed slag inclusions (For nom. wall thickness 4.7 mm and less)	not permitted
e)	Concave root surface (Suck up)	For single sided welded joints, concavity of the root surface shall not reduce the total thickness of joint, including reinforcement, to less than the thickness of the thinner of the components being joined.
f)	Weld ripples irregularities	2.5 mm or less
g)	Lack of uniformity in bead width	2.5 mm or less.
h)	Lack of uniformity of leg length	2.5 mm or less.
i)	Unevenness of bead	2.0 mm or less
j)	Weld undercutting	0.8 mm or 1/4 thickness of thinner components joined by butt weld, whichever is less. (shall be smooth finished)

k)	Overlap	1.5 mm or less
l)	l) Bead deflection	2.5 mm or less
m)	External weld reinforcement and internal weld protrusion (when backing rings are not used) shall be fused with and shall merge smoothly into the component surfaces. The height of the lesser projection of external weld reinforcement or internal weld protrusion from the adjacent base material surface shall not exceed the following limits:	
	Wall thickness of thinner component joined by butt weld (mm)	Weld reinforcement or internal weld protrusion (mm) max 3.2
	6.4 and under Over 6.4 -12.7 Over 12.7 -25.4 Over 25.4	1.6 3.2 4.0 4.8

n) Throat thickness of fillet welds:

Nominal thickness of the thinner component x 0.7 or more.

o) 'Flattening

Flattening of a bend, as measured by difference between the nominal outside diameter and minimum or maximum diameter at any cross section shall not exceed 5 % of the nominal outside diameter of pipe.

p) Reduction of wall thickness

Reduction of wall thickness of a bend, as measured by difference between the nominal thickness and minimum thickness shall not exceed 10 % of the nominal wall thickness of pipe.

2.2 Welds having any of imperfections which exceed the limitations specified in various clauses of 2.1 shall be repaired by welding, grinding or overlaying etc. Number of times of repair welding for the same weld, however shall conform to applicable notes to Table 1- Note 6(b)b.5.

3.0 NON DESTRUCTIVE EXAMINATION

3.1 The type and extent of weld examination shall be in accordance with Table-1. All visual and supplementary methods of girth weld examination shall be in accordance with ASME B31.3 & the requirements of this standard specification.

3.2 Welds between dissimilar materials shall be examined by method & to the extent required for the material having the more stringent examination.

4. TABLE-1 (with applicable notes)

TABLE 1: CLASS, TYPE & EXTENT OF WELD EXAMINATION

INSPECTION CLASS: I

INSPN. CLASS	SERVICE	MATERIAL (NOTE 3)	P.NO.	TEMP. DEG.C	PRESS. CLASS B16.5/ B16.34	APPLICABLE PIPING CLASS	TYPE OF EXAMINATION	TYPE OF WELD EXAMINED				
								GIRTH BUTT WELD	SOCKET WELD (NOTE 2)	ATTACH-MENT WELD	FAB. BRANCH WELD (NOTE 1)	FAB. WELDS OF MITRES / REDUC.
1	2	3	4	5	6	7	8	9	10	11	12	13
I	CATEGORY 'D' FLUID SERVICE	CARBON STEEL	1	0 TO 186	150# UPTO 10.55 KG/CM²	A3A, A3Y, J2A, J3A, A4Y, A5Y,A93A	a) VISUAL	100%	100%	100%	100%	100%
		AUSTENIC S.S.	8	- 29 TO 186		A3K						
		HDPE	---	- 20 TO 50		A1Z, A4Z, A5Z.	b) LP (NOTE 4, 6,9,)	---	---	---	5%	10%
		CURPO NICKEL	34	- 29 TO 60								

REMARKS FOR ABOVE TABLE:

1. LP TEST NOT APPLICABLE TO NON-METALLIC CLASSES.
2. MITRES & FABRICATED REDUCERS ARE PERMITTED ONLY IF SPECIFIED IN PMS.

TABLE 1: CLASS, TYPE & EXTENT OF WELD EXAMINATION (CONTD.)

INSPECTION CLASS: III

INSPN. CLASS	SERVICE	MATERIAL (NOTE 3)	P. NO.	TEMP. DEG.C	PRESS. CLASS B16.5/ B16.34	APPLICABLE PIPING CLASS	TYPE OF EXAMINATION	TYPE OF WELD EXAMINED				
								GIRTH BUTT WELD	SOCKET WELD (NOTE 2)	ATTACH -MENT WELD	FAB. BRANCH WELDS (NOTE 1)	FAB. WELDS OF MITRES / REDUC.)
1	2	3	4	5	6	7	8	9	10	11	12	13
III	FIRE WATER AND IBR SERVICES.	CARBON STEEL (FIRE WATER)	1	- 29 TO 427	150# TO 600#	A33A, A33Y, A94A	a) VISUAL	100%	100%	100%	100%	100%
		CARBON STEEL (IBR)				A2A, B2A, D2A.	b) RADIOGRAPHY (NOTE 5,6)	10%	---	---	---	50%
							c) LP / MP (NOTE 4,6,11)	---	10%	---	10%	---
							d) HARDNESS	NOTE 7	NOTE 7	NOTE 7	NOTE 7	NOTE 7

REMARKS FOR ABOVE TABLE :

1. FOR IBR SERVICE A2A, B2A & D2A NOTE- 8 IS ALSO APPLICABLE.
2. MITRES & FABRICATED REDUCERS ARE PERMITTED ONLY IF SPECIFIED IN PMS.
3. FOR A33A , A33Y & A94A FIRE WATER SERVICE, NOTE-12 IS ALSO APPLICABLE.

TABLE 1: CLASS, TYPE & EXTENT OF WELD EXAMINATION (CONTD.)

INSPECTION CLASS: III

INSPN. CLASS	SERVICE	MATERIAL (NOTE 3)	P. NO.	TEMP. DEG. C	PRESS. CLASS B16.5/ B16.34	APPLICABLE PIPING CLASS	TYPE OF EXAMINATION	TYPE OF WELD EXAMINED				
								GIRTH BUTT WELD	SOCKET WELD (NOTE 2)	ATTACH -MENT WELD	FAB. BRANCH WELD (NOTE 1)	FAB. WELDS OF MITRES/ REDUC.
1	2	3	4	5	6	7	8	9	10	11	12	13
III (CONT D)	a) ALL SERVICES OTHER THAN THOSE COVERED UNDER INSPECTION CLASS-I BUT NON-TOXIC, NOT SUBJECTED TO SEVERE CYCLIC CONDITIONS.	CARBON STEEL	1	- 29 TO 427	300# TO 600#	B32A, B1A, D1A, B6A, B9A, D9A, B13A	a) VISUAL	100%	100%	100%	100%	100%
	b) TOXIC, NON-LETHAL & FLAMMABLE.						b) RADIOGRAPHY (NOTE 5,6)	20%	---	---	---	100%
	c) FLAMMABLE / NON FLAMMABLE & TOXIC / NON-TOXIC; NOT SUBJECT TO SEVERE CYCLIC CONDITIONS						c) MP / LP (NOTE 4,6,10,11)	---	20%	---	20%	
		LTCS		-45 TO 204		B4A, D4A	d) HARDNESS	NOTE 7	NOTE 7	NOTE-7	NOTE-7	NOTE-7
		AUSTENITIC STAINLESS STEEL	8	-29 TO 500		B21N,B23K, D23K, B1K,D1K, B6K, B1M,B3M, B1N, B6N, B23N, D23N						

REMARKS FOR ABOVE TABLE :

1. MITRES & FABRICATED REDUCERS ARE PERMITTED ONLY IF SPECIFIED IN PMS.
2. NOTE- 7 FOR HARDNESS IS NOT VALID FOR P. NO. 8.

TABLE 1: CLASS, TYPE & EXTENT OF WELD EXAMINATION (CONTD.)

INSPECTION CLASS: III (CONTD.)

INSPN. CLASS	SERVICE	MATERIAL (NOTE 3)	P. NO.	TEMP. DEG.C	PRESS. CLASS B16.5/ B16.34	APPLICABLE PIPING CLASS	TYPE OF EXAMINATION	TYPE OF WELD EXAMINED				
								GIRTH BUTT WELD	SOCKET WELD (NOTE 2)	ATTACH -MENT WELD	FAB. BRANCH WELDS (NOTE 1)	FAB. WELDS OF MITRES / REDUC.)
1	2	3	4	5	6	7	8	9	10	11	12	13
III (CONTD)	ALL GENERAL SERVICES EXCEPT THOSE SUBJECT TO SEVERE CYCLIC CONDITIONS.	C - 0.5 Mo STEEL.	3	ABOVE -29	150# TO 600#		a) VISUAL	100%	100%	100%	100%	100%
		0.5 Cr - 0.5 Mo STEEL										
		1 TO 3 Cr Mo. STEEL.	4.5A			A1D, B1D, D1D B1E, B24D	b) RADIOGRAPHY (NOTE 5,6)	20%	---	---	---	50%
		C - 0.5 Mo STEEL (IBR).	3				c) LP / MP (NOTE 4,6,11)	---	20%	---	20%	---
		1 - 3 Cr Mo STEEL (IBR)	4.5A			D2D, B2E	d) HARDNESS	NOTE 7	NOTE 7	NOTE 7	NOTE 7	NOTE 7

REMARKS FOR ABOVE TABLE:

1. FOR IBR SERVICE D2D, B2E NOTE- 8 IS ALSO APPLICABLE.
2. MITRES & FABRICATED REDUCERS ARE PERMITTED ONLY IF SPECIFIED IN PMS.

TABLE 1: CLASS, TYPE & EXTENT OF WELD EXAMINATION (CONTD.)

INSPECTION CLASS: III (CONTD.)

INSPN. CLASS	SERVICE	MATERIAL (NOTE 3)	P. NO.	TEMP. DEG.C	PRESS. CLASS B16.5/ B16.34	APPLICABLE PIPING CLASS	TYPE OF EXAMINATION	TYPE OF WELD EXAMINED				
								GIRTH BUTT WELD	SOCKET WELD (NOTE 2)	ATTACH -MENT WELD	FAB. BRANCH WELDS (NOTE 1)	FAB. WELDS OF MITRES / REDUC.)
1	2	3	4	5	6	7	8	9	10	11	12	13
III (CONTD)	ALL GENERAL SERVICES EXCEPT THOSE SUBJECT TO SEVERE CYCLIC CONDITIONS.	3.5 Ni STEEL	9B	-80 TO 120	150# TO 600#		a) VISUAL	100%	100%	100%	100%	100%
							b) RADIOGRAPHY (NOTE 5,6)	10%	---	---	---	50%
							c) LP / MP (NOTE 4,6,10,11)	---	10%	---	10%	---
							d) HARDNESS	NOTE 7	NOTE 7	NOTE 7	NOTE 7	NOTE 7

REMARKS FOR ABOVE TABLE:

1. NOTE- 7 FOR HARDNESS IS NOT VALID FOR P. NO. 9B.
2. MITRES & FABRICATED REDUCERS ARE PERMITTED ONLY IF SPECIFIED IN PMS.

TABLE 1: CLASS, TYPE & EXTENT OF WELD EXAMINATION (CONTD.)

INSPECTION CLASS: III (CONTD.)

INSPN. CLASS	SERVICE	MATERIAL (NOTE 3)	P. NO.	TEMP. DEG.C	PRESS. CLASS B16.5/ B16.34	APPLICABLE PIPING CLASS	TYPE OF EXAMINATION	TYPE OF WELD EXAMINED				
								GIRTH BUTT WELD	SOCKET WELD (NOTE 2)	ATTACH -MENT WELD	FAB. BRANCH WELDS (NOTE 1)	FAB. WELDS OF MITRES / REDUC.)
1	2	3	4	5	6	7	8	9	10	11	12	13
III (CONTD)	ALL GENERAL SERVICES EXCEPT THOSE SUBJECT TO SEVERE CYCLIC CONDITIONS.	ALUMINIUM & ALUMINIUM BASE ALLOY	21 TO 25	ALL	150#		a) VISUAL	100%	100%	100%	100%	100%
		COPPER & COPPER BASE ALLOY	31				b) RADIOGRAPHY (NOTE 5,6)	20%	---	---	---	50%
		ALUMINIUM BRONZE	35				c) LP / MP (NOTE 4,6,10,11)	---	20%	---	20%	---
		OTHER NON FERROUS ALLOYS	---									

TABLE 1: CLASS, TYPE & EXTENT OF WELD EXAMINATION (CONTD.)

INSPECTION CLASS: IV

INSPN. CLASS	SERVICE	MATERIAL (NOTE 3)	P. NO.	TEMP. DEG.C	PRESS. CLASS B16.5/ B16.34	APPLICABLE PIPING CLASS	TYPE OF EXAMINATION	TYPE OF WELD EXAMINED				
								GIRTH BUTT WELD	SOCKET WELD (NOTE 2)	ATTACH -MENT WELD	FAB. BRANCH WELDS (NOTE 1)	FAB. WELDS OF MITRES / REDUC.)
1	2	3	4	5	6	7	8	9	10	11	12	13
IV	ALL SERVICES OTHER THAN SPECIAL SERVICES (O,H)	CARBON STEEL	1	ALL	ABOVE 600#	E1A, F1A, E9A, F9A, E19A, F19A	a) VISUAL	100%	100%	100%	100%	100%
		CARBON STEEL (IBR)				E2A, F2A.	b) RADIOGRAPHY (NOTE 5,6)	100%	---	---	---	100%
							c) LP / MP (NOTE 4,6,10,11)	---	100%	10%	100%	---
							d) HARDNESS	NOTE 7	NOTE 7	NOTE 7	NOTE 7	NOTE 7

REMARKS FOR ABOVE TABLE:

1. FOR IBR SERVICE E2A & F2A NOTE- 8 IS ALSO APPLICABLE.
2. EXTENT OF HARDNESS TEST FOR CLASSES E19A, F19A IS 100% .
3. MITRES & FABRICATED REDUCERS ARE PERMITTED ONLY IF SPECIFIED IN PMS.

TABLE I: CLASS, TYPE & EXTENT OF WELD EXAMINATION (CONTD.)

INSPECTION CLASS: IV (CONTD.)

INSPN. CLASS	SERVICE	MATERIAL (NOTE 3)	P. NO.	TEMP. DEG.C	PRESS. CLASS B16.5/ B16.34	APPLICABLE PIPING CLASS	TYPE OF EXAMINATION	TYPE OF WELD EXAMINED				
								GIRTH BUTT WELD	SOCKET WELD (NOTE 2)	ATTACH -MENT WELD	FAB. BRANCH WELDS (NOTE 1)	FAB. WELDS OF MITRES / REDUC.)
1	2	3	4	5	6	7	8	9	10	11	12	13
IV (CONTD)	ALL GENERAL SERVICES.	C - 0.5 Mo STEEL	3	ALL	ABOVE 600#	--	a) VISUAL	100%	100%	100%	100%	100%
		5 Cr - 9 Cr Mo STEEL	5B		150# TO 600#	A4F, A4G, B3F, B4F, B4G.	b) RADIOGRAPHY (NOTE 5,6)	100%	---	---	---	100%
		13 Cr (TYPE-410 SS)	6		ALL	--						
		KILLED CARBON STEEL	1	UPTO - 45	ABOVE 600#	--	c) LP / MP (NOTE 4,6,10,11)	---	100%	10%	100%	---
		1 TO 3 Cr STEEL (IBR)	4,5A	ALL		F2D, E2E, G2E	d) HARDNESS	NOTE 7	NOTE 7	NOTE 7	NOTE 7	NOTE 7

REMARKS FOR ABOVE TABLE:

1. FOR IBR SERVICE F2D, E2E, G2E NOTE- 8 IS ALSO APPLICABLE.
2. MITRES & FABRICATED REDUCERS ARE PERMITTED ONLY IF SPECIFIED IN PMS.

TABLE 1: CLASS, TYPE & EXTENT OF WELD EXAMINATION (CONTD.)

INSPECTION CLASS: IV (CONTD.)

INSPN. CLASS	SERVICE	MATERIAL (NOTE 3)	P. NO.	TEMP. DEG.C	PRESS. CLASS B16.5/ B16.34	APPLICABLE PIPING CLASS	TYPE OF EXAMINATION	TYPE OF WELD EXAMINED				
								GIRTH BUTT WELD	SOCKET WELD (NOTE 2)	ATTACH -MENT WELD	FAB. BRANCH WELDS (NOTE 1)	FAB. WELDS OF MITRES / REDUC.)
1	2	3	4	5	6	7	8	9	10	11	12	13
IV (CONTD)	SPECIAL SERVICES (O, H)	CARBON STEEL	1	ALL	ALL	A5A,B5A,D5A, E5A, F5A	a) VISUAL	100%	100%	100%	100%	100%
	SPECIAL SERVICES (NACE & CAUSTIC), AXEN-1, AXEN-2, AXEN-3, AXEN-4					A16A,B16A, D16A,A19A, B19A,D19A, A28A , B28A, A27A, B27A, D27A,E27A A36A, B36A, D36A, A46A, B46A, D46A, A47A, B47A, D47A, E47A, B55A, A51A, B51A						
	SERVICES SUBJECT TO SEVERE CYCLIC CONDITIONS	0.5 TO 9 CR Mo STEEL	3, 4, 5A, 5B			--	b) RADIOGRAPHY (NOTE 5,6)	100%	---	---	---	100%
	SPECIAL SERVICES (NACE, O, H, CAUSTIC)					B5D, D5D, D5E, E5E, D52D, E52D						
	SERVICES SUBJECT TO SEVERE CYCLIC CONDITIONS	13 CR STEEL (TYPE 410SS)	6			--	c) LP / MP (NOTE 4,6,10,11,13)	---	100%	10%	100%	---
	SERVICES SUBJECT TO SEVERE CYCLIC CONDITIONS.	3.5 NI STEEL	9B			--	d) HARDNESS	NOTE 7	NOTE 7	NOTE 7	NOTE 7	NOTE 7
	SPECIAL SERVICES (NACE, O, H, CAUSTIC)					--						
	SPECIAL SERVICES (NACE, O, H, CAUSTIC)	NI ALLOYS	41, 42, 43			--						
	ALL SERVICES		45			A54Q, D54Q						

REMARKS FOR ABOVE TABLE:

1. NOTE-7 FOR HARDNESS IS NOT VALID FOR P.NO.9B.

2. EXTENT OF HARDNESS TEST FOR CLASSES A5A,B5A,D5A, E5A AND F5A IS 10% & FOR CLASSES A16A,B16A,D16A,A19A,B19A,D19A,A28A, B28A,A27A, B27A, D27A, E27A, A36A, B36A, D36A, A46A, B46A, D46A, A47A, B47A, D47A, E47A, A51A, B51A AND B55A IT IS 100%.

3. [illegible] FABRICATED REDUCERS [illegible] ONLY IF SPECIFIED IN PM

TABLE 1: CLASS, TYPE & EXTENT OF WELD EXAMINATION (CONTD.)

INSPECTION CLASS: IV (CONTD.)

INSPN. CLASS	SERVICE	MATERIAL (NOTE 3)	P. NO.	TEMP. DEG.C	PRESS. CLASS B16.5/ B16.34	APPLICABLE PIPING CLASS	TYPE OF EXAMINATION	TYPE OF WELD EXAMINED				
								GIRTH BUTT WELD	SOCKET WELD (NOTE 2)	ATTACH -MENT WELD	FAB. BRANCH WELDS (NOTE 1)	FAB. WELDS OF MITRES / REDUC.)
1	2	3	4	5	6	7	8	9	10	11	12	13
IV (CONTD)	SERVICES SUBJECT TO SEVERE CYCLIC CONDITIONS.	AUSTENITIC STAINLESS STEEL	8	ALL	ALL	–	a) VISUAL	100%	100%	100%	100%	100%
	LOW TEMP. SERVICE			BELOW - 45	150/ 300/ & 600#	A2K, B2K, D2K	b) RADIOGRAPHY (NOTE 5,6)	100%	--	--	--	100%
	GENERAL SERVICES			ALL	ABOVE 600#	E3M						
	HIGH TEMP. SERVICES			> 500	ALL	B4K, B5K	c) LP / MP (NOTE 4,6,10,11)	–	100%	10%	100%	–
	SPECIAL SERVICES (O,H)			ALL	ALL	B5M	d) HARDNESS	-	-	-	-	-

REMARKS FOR ABOVE TABLE :

1. MITRES & FABRICATED REDUCERS ARE PERMITTED ONLY IF SPECIFIED IN PMS.

Applicable Notes to Table-1

1. Branch welds shall consist of the welds between the pipe & reinforcing clement (if any), nozzles & reinforcing element and the pipe & nozzle under the reinforcing element. Reinforcing element to be interpreted as pads, saddles, weldolets, sockolets etc.

2. Seal welds of threaded joints shall be given the same examination as socket welds. 3.

3. Unless specifically stated, all materials shall be for "Non-IBR" service.

4. Magnetic Particle & the Liquid Penetrant method of examination shall be in accordance with Section V of the ASME Boiler and Pressure Vessel Code, Article VII and VI respectively. The entire area of the accessible finished weld surface shall be examined. Selected root runs, subject to a maximum of 10%, before finished weld, may also be examined, at the discretion of the engineer-in-charge.

   a) Wherever MP / LP testing is specified, either MP or LP test may be used. But wherever only MP test is specified, LP method of examination may be used only if MP examination is impracticable in the field as concurred by EIL site-in charge.

   b) "Random 5%" of Liquid Penetrant / Magnetic Particle test shall mean testing, by applicable test, one weld for each twenty welds or less made by the same welding procedure. "Random 10%" shall mean testing, by applicable test, one weld for each ten welds or less made by the same welding procedure. Similarly "Random 20%" shall mean testing, by applicable test, one weld for each five welds or less made by the same welding procedure.

   c) When Liquid Penetrant examination is specified, the surface shall be free of peened discontinuities.

   d) Inspection shall be performed in the welds excluding those for which radiography has been done.

   e) Girth weld, branch weld, attachment weld & socket weld of 3-1/2% Ni steel shall be Liquid Penetrant tested only when welded with austenitic material where MP test has been specified.

5. Radiography:

   a) "Random 5%, 10% or 20% radiography" shall mean examining not less than one from cach 20 welds or less in case of "Random 5% radiography", 10 welds or less in case of "Random 10% radiography", one from each five welds or less in case of "Random 20%

radiography" made by the same welding procedure. Irrespective of percentage, no. of welds to be radiographed shall be minimum |. However first two welds made by each welder shall also be radiographed in case of "Random radiography". Welds selected for examination shall not include flange welds and shall be radiographed for their entire length. However, where it is impossible or impracticable to examine the entire weld length of field welds for cither random or 100% radiography, and if the same impossibility is agreeable to EIL site-in- charge, then a single 120 deg. exposure of the weld length may be given a Magnetic Particle test or Liquid Penetrant test. However in such cases for ferro-magnetic materials, only MP test shall be acceptable for classes higher than 600#.

b) In-process examination shall not be substituted for any required radiographic examination.

c) Number of radiographs per one circumferential weld shall be as per ASME Sec.V Articles 2 and 22.

6. When radiography or other non destructive inspection is specified, acceptance criteria for repairs or defects shall be as follows:

a) In case of 100% examination, any unacceptable weld shall be repaired and reinspected.

b) If required random examination reveals a defect requiring repair, then:

b.1 Two additional examinations of same type shall be made of the same kind of item (if welded joint, then by the same welding procedure or operator or both).

b.2 If the group of items examined as required by b.1 above is acceptable, the items requiring repair shall be repaired or replaced and reexamined as required and all items represented by this additional examination shall be accepted.

b.3 If any of the items examined as required by b.1 above reveals a defect requiring repair, two further comparable items shall be examined for each defective item found by examination.

b.4 If all the items examined as required by b.3. are acceptable, the items requiring repair shall be repaired or replaced and reexamined as required, and all items represented by this further examination shall be accepted.

b.5 Number of times repair welding could be done for the same weld before acceptance shall be as follows:

Material	No. of times repair welding is allowed
C.S. upto 300 #	3 or less
C.S. above 300 #	2 or less
Killed steel	2 or less
Low alloy stcel	2 o¢ less
Austenitic S.S.	2 or less
3.5 Ni steel	2 or less
Al & Al base alloy	2 or less
Cu & Cu base alloy	2 or less
Others	2 or less

b.6 Welds not found acceptable for allowed number of times of repair as per b.5 above shall be replaced and reexamined.

b.7 If any of the items examined as required by b.4 above reveals a defect requiring repair, all items represented by these examinations shall be either :

- repaired or replaced and reexamined as required.
- fully examined and repaired or replaced as necessary, and reexamined as necessary.

7. Hardness test

a) Hardness test shall be in accordance with ASTM specification E10. Hardness tests of the heat affected zone shall be made at a point as near as practicable to the edge of the weld. One test per weld shall be performed.

b) Hardness test where specifically called out in Table-1 of this specification or in PMS, shall be carried out irrespective of thickness and to the extent (%age) as mentioned therein.

c) All welds which are given heat treatment shall be hardness tested. Hardness test shall be performed after final heat treatment.

d) A minimum of 10% of welds, hot bends, and hot formed components in each furnace heat treated batch and 100% of those which are locally heat treated shall be hardness tested.

e) Hardness test requirement not covered in this specification shall be as per ASME B31.3.

f) The hardness limit applies to the weld and heat affected zone. Following hardness values shall be maintained:

Base Metal Group	Maximum Hardness (BHN/RC)
CS	238BHN/RC22
CS (NACE) , Caustic,	
Amine, H2	200BHN
Cr Upto 2%	225BHN
Cr 2.25%-10%	241BHN
18/8 SS (NACE)	RC22

g) In case hardness values are mentioned in both Welding Specification

Charts for Piping Classes, (6-77-0005) & table given in Note-7(f), the lower of the two values shall be applicable.

8. For IBR service lines, following [BR requirements shall apply in addition to the notes 4, 5, 6, 7, 12 and Table 1. In case of conflict between above notes and these requirements, the more stringent ones shall apply. IBR piping shall be erected of IBR inspector approved material and construction procedure. Erected piping shall be hydrotested, inspected and approved by IBR inspector.

   a) Piping over 102 mm (4") bore:

      10% of welds made by each welder on a pipeline with a minimum of two welds per welder, selected at random, shall be subjected to radiography.

   b) Piping 102 mm (4") bore and under, but not less than 38 mm (1-1/2") bore:

      'Two percent of welds made by each welder on a pipeline with a minimum of one weld per welder, selected at random, shall be subjected to radiography or may be cut for visual examination and tests.

c) Piping less than 38 mm (1.5") bore:

Special tests are not normally required but 2% of welds by each welder on a pipe line may be cut out from the pipeline for the visual examination and bend tests.

d) Retests:

If any test specimen is unsatisfactory, two further weld specimens for retests shall be selected from the production welds and subjected to tests. In the event of failure of any retest specimens, the production welds carried out by this welder subsequent to the previous test shall be given special consideration.

9. For fabricated fittings LP test shall be done on the final pass of welding only, in addition to visual examination.

10. For mitres and fabricated reducers, LP / MP test shall be done on root pass in addition to radiography applicable to circumferential joint of respective piping class.

11. For branch connections, LP/MP test shall be done on root pass and final pass.

12. 10% of the butt weld joints shall be radiographed, however, 50% of these butt weld joints shall be field weid joints.

13. All joints inciuding butt weld joints for AI6A, BI6A, DI6A, A27A, B27A, D27A, E27A, A36A, B36A, D36A, A46A, B46A, D46A, A47A, B47A, D47A and E47A classes shall be wet fluorescent magnetic particle tested. Percentage of wet fluorescent magnetic particle testing of butt weld joints shali be 100% and this testing shall be in addition to radiography.

14. For lined specs, testing (MP/LP/Radiography etc.) shall be performed before lining.

TECHNICAL NOTES

FOR PIPES

4	26.11.19	Periodic Review/Updating and Issued for Implementation	RL	PP	RK
Rev.	**Date**	**Description**	**Prpd.**	**Chkd.**	**Appd.**

CONTENTS

1.0	GENERAL	4
2.0	CODES AND STANDARDS	4
3.0	TESTING	4
4.0	TECHNICAL REQUIREMENTS	5
5.0	IBR REQUIREMENTS	6
6.0	HYDROSTATIC TEST	7
7.0	MARKING AND DISPATCH	9
8.0	ABBREVATIONS	9

1.0 GENERAL

1.1 All pipes and their dimensions, tolerances, chemical composition, physical properties, heat treatment, hydro test and other testing and marking requirements shall conform to the latest codes and standards specified in the material requisition (MR). Deviation (s), if any shall be highlighted on a separate sheet by the supplier in the quotation itself.

2.0 CODES AND STANDARDS

2.1 Following codes and standards shall be followed for design, fabrication and testing.

ASME B31.3	:	Process piping
ASME BPVC SEC. IX	:	Welding, Brazing and Fusing Qualifications.
ASME BPVC SEC. II Part D	:	Materials
NACE MR-0175	:	Petroleum and Natural Gas Industries- Materials for Use in H2S-Containing Environments in Oil and Gas Production.
API SPEC 5L	:	Specification for Line Pipe
ASME B36.10M	:	Welded and Seamless Wrought Steel Pipe
ASME B36.19M	:	Stainless Steel Pipes

2.2 Editions and addenda (if any) of referred Codes and standards shall be the latest version valid on the date of award of contract.

2.3 For the sake of simplicity, the initials of the American Society to which the codes are referred to may be omitted in the specification. For example; B16.5 is a code referring to ASME; A106 is a standard referring to ASTM.

3.0 TESTING

3.1 Test reports shall be supplied for all mandatory tests as per the applicable material specifications. Test reports shall also be furnished for any supplementary tests as specified in the MR and Clauses 4.10 and 4.11.
Material test certificates (physical property, chemical composition and heat treatment report) shall also be furnished for the pipes supplied.

3.2 Positive material identification (PMI) shall be performed as per the scope and procedure as defined in the specification for positive material identification (PMI) at suppliers work (03-TS-039).

4.0 **TECHNICAL REQUIREMENTS**

4.1 Steel made by acid bessemer process shall not be acceptable.

4.2 All longitudinally welded pipes other than IS 3589 shall be automatic welded.

4.3 Pipe shall be supplied in single or double random length of 5 to 7 and 10 to 14 meters respectively.

4.4 Seamless and E.R.W. pipes shall not have any circumferential seam joint in a random length. However, in-case of E.FS.W. pipe in one random length one welded circumferential seam of same quality as longitudinal weld is permitted. This weld shall be at least 2.5 M from either end. The longitudinal seams of the two portions shall be staggered by 90 deg. Single random length in such cases shall be 5 to 7 m.

4.5 Pipes with screwed ends shall have NPT external taper pipe threads conforming to ASME B 1.20.1 (up to 1.5" NB) and IS 554 (From 2" to 6" NB) for IS Pipes.

4.6 Pipe with bevel ends shall be in accordance with ASME B-16.25. Weld contours shall be as follows:

MATERIAL	WALL THICKNESS	WELD CONTOUR
Carbon steel (Except low temp. carbon steel)	up to 22 mm.	Figure 2 type A
	> 22 mm.	Figure 3 type A
Alloy steel, Stainless steel and Low temp. Carbon steel	up to 10 mm	Figure 4
	> 10 mm up to 25 mm	Figure 5 type A
	> 25 mm.	Figure 6 type A

4.7 For Galvanization, pipes shall be coated with zinc by hot dip process or electro zinc plating conforming to IS 4736/ ASTM A153 or ASTM B633 respectively.

4.8 Requirement of PWHT shall be as per ASME B 31.3.

4.9 All austenitic stainless steel pipes shall be supplied in solution annealed condition.

4.10 I.G.C Test Stainless Steels:

4.10.1 For all austenitic stainless steel pipes intergrannular corrosion test shall be conducted as per ASTM A 262 practice “B” with acceptance criteria of corrosion rate of 60 mils / year (max).

OR

ASTM A262 practice “E” with acceptance criteria of “No cracks as observed from 20x magnification” and “microscopic structure to be observed from 250x magnification”.

4.10.2 When specifically asked for in MR for high temperature application of some grades of austenitic stainless steel (e.g. SS 309, 310, 316, 316H etc.) ASTM A 262 practice "C" with acceptance criteria of 15 mils / year (max) shall have to be conducted.

4.10.3 For the I.G.C. test as described in 1.10.1 and 1.10.2, two sets of samples shall be drawn from each solution annealing lot, one set corresponding to highest carbon content and other set corresponding to highest pipe thickness. When testing is conducted as per practice "E", photograph of microscopic structure shall be submitted for record.

4.11 All welded pipes indicated as „CRYO" and „LT" in MR shall be impact tested as per requirement and acceptance criteria of ASME B31.3. The impact test temp. shall be -196 °C. and -45 °C for stainless steel and carbon steel respectively unless specifically mentioned otherwise in MR.

4.12 Specified heat treatment for carbon steel, alloy steel and solution annealing for stainless steel pipes shall be carried out after weld repairs. Number of weld repairs at same spot shall be restricted to maximum two by approved repair procedure.

4.13 Pipes under "NACE" category shall meet the requirement given in std. NACE MR-01-75./ISO 15156.

4.14 For black or galvanized pipes to IS 1239, minimum percentage of elongation shall be 20 %.

4.15 For dual grades of SS where specified chemical composition and mechanical properties of both grades specified shall be ensured.

5.0 IBR REQUIREMENTS

5.1 Pipes under purview of IBR shall be accompanied with IBR certificate original in form IIIA, duly approved and countersigned by IBR authority / local authority empowered by Central Boiler Board of India. Photocopy of original certificate duly attested by the local boiler inspector where the supplier is located is the minimum requirement for acceptance.

5.2 For carbon steel pipes under IBR the chemical composition shall conform to the following :

Carbon (max.)	:	0.25 %
Others (S, P, Mn)	:	As prescribed in IBR regulation

The chemical composition as indicated in this clause is not applicable for pipes other than IBR services.

5.3 For allowable stress calculation of CS pipes, conditions mentioned in IBR regulation 370 shall be referred.

5.4 For material 1 ¼ Cr – ½ Mo (ASTM A335 Gr.P11 / A691 Gr. 1 ¼ Cr) and 2 ¼ Cr – 1 Mo (ASTM A335 GrP22 / A691 Gr 2 ¼ Cr) Form III-A approved by IBR shall include the tabulation of E_t, S_c and S_r values for the entire temperature range given below. E_t, S_c and S_r values shall be such that throughout the temperature range.

$E_t / 1.5 \geq S_A$

$S_c \geq S_A$

$S_r / 1.5 \geq S_A$

Where S_A : Allowable stress at the working metal temperature.

E_t : Yield point (0.2% proof stress at the working metal temperature).

S_c : The average stress to produce elongation of 1% (creep) in 100000 hrs at the working metal temperature.

S_r : The average stress to produce rupture in 100000 hrs at the working metal temperature and in no case more than 1.33 times the lowest stress to produce rupture at this temperature.

S_A (psi)											
Temp(°F) Material	500	600	650	700	750	800	850	900	950	1000	1100
A335 Gr P11	16200	15700	15400	15100	14800	14400	14000	13600	9300	6300	2800
A691 Gr 1¼Cr	18900	18300	18000	17600	17200	16800	16400	13700	9300	6300	2800
A335 Gr P22/ A691 Gr 2¼Cr	17900	17900	17900	17900	17900	17700	17100	13600	10800	8000	3800

Note : S_A values given above are as per ASME B31.3-. Values shall be as per the latest edition specified in project specifications

6.0 HYDROSTATIC TEST

6.1 All pipes shall be hydrostatically tested.

6.2 The mill test pressure shall be as following standard.

6.2.1 Seamless, ERW and spiral welded

a) Carbon Steel

Material Std.	Test Pressure Std.
ASTM A106 Gr. B	ASTM A530
API 5L Gr.B,Seamless	API 5L
API 5L, E.R.W	API 5L
API 5L, Spiral	API 5L
ASTM A333 Gr. 3 & 6 , Seamless **/ E.R.W.**	ASTM A530

b) Seamless Alloy Steel

Material Std.	Test Pressure Std.
ASTM A335 Gr. P1,P12,P11,P22,P5,P9	ASTM A530
ASTM A268 TP 405 , TP410	ASTM A530

c) Seamless Stainless Steel

Material Std.	Test Pressure Std.
ASTM A312 Gr. TP 304,304L,304H,316,316L,316H,321,347	ASTM A530

d) Seamless Nickel Alloy

Material Std.	Test Pressure Std.
ASTM B161 UNS NO. 2200	ASTM B161
ASTM B165 UNS NO. 4400	ASTM B165
ASTM B167 UNS NO. 6600	ASTM B167
ASTM B407 UNS NO. 8800	ASTM B407

e) Welded Nickel Alloy

Material Std.	Test Pressure Std.
ASTM B725 UNS NO. 2200,4400	ASTM B725
ASTM B517 UNS NO. 6600	ASTM B517
ASTM B514 UNS NO. 8800	ASTM B514

6.2.2 Electric Fusion Welded

a) Carbon Steel and Alloy Steel E.FS.W (16" and above)

Material Std.	Test Pressure Std.
API 5L Gr. B ASTM A671 Gr. CC65, 70(Cl.32) ASTM A672 Gr. C60,65,70(Cl.12,22) ASTM A671Gr. CF60, 65,66,70(Cl.32) ASTM A691 Gr.½Cr.,1Cr,1¼Cr,2¼Cr, 5Cr,9Cr(Cl.42)	P = 2ST/D S = 90% of SMYS Except for API 5L Gr. B S = 85% of SMYS For API 5L Gr. B T = Nominal Wall Thickness D = O.D of Pipe

b) Stainless Steel E.R.W (2" to 6") :

The hydrostatic test pressure in Kg/cm² for the following materials shall be as given below:

Material Gr.1: ASTM A312 TP 304 / 304H / 316 / 316H / 321 / 347 welded.
Material Gr.2: ASTM A312 TP 304L / 316L welded.

Size	Pipe Schedule : 10S		Pipe Schedule : 40S		Pipe Schedule : 80S	
	Material Gr. 1	Material Gr. 2	Material Gr. 1	Material Gr. 2	Material Gr. 1	Material Gr. 2
2"	100	80	155	130	230	190
3"	80	60	155	130	230	190
4"	80	50	155	130	230	190
6"	65	35	90	75	155	130

c) Stainless Steel E.FS.W (8" and above)

Material Std.	Test Pressure Std.
	P = 2ST/D
ASTM A358 TP 304L,	S = 85% of SMYS
304,304H,316L,316,316H,321,347(Classes 1,3 & 4)	T = Nominal Wall Thickness
	D = O.D of Pipe
	P = 2ST/D
ASTM A358 TP 304L,	S = 72% of SMYS
304,304H,316L,316,316H,321,347(Classes 2 & 5)	T = Nominal Wall Thickness
	D = O.D of Pipe

6.2.3 Carbon steel pipes to IS standards :

Material Std.	Test Pressure Std.
IS 1239	IS 1239
IS 3589	IS 3589

6.2.4 For other material standard, mill test pressure as specified in respective material standard.

7.0 MARKING AND DISPATCH

7.1 All pipes shall be marked in accordance with the applicable codes, standards and specifications. In addition the purchase order no. and special conditions like "IBR", "CRYO" and "NACE" etc. shall also be marked.

7.2 Pipes under "IBR", "CRYO" and "NACE" shall be painted in red strips, light purple brown strips and canary yellow strips respectively longitudinally throughout the length for easy identification. Width of strips shall be 25 mm or as per color coding specified under project specifications.

7.3 Paint or ink for marking shall not contain any harmful metal or metallic salts such as zinc, lead or copper which causes corrosive attack on heating.

7.4 Pipes shall be dry, clean and free from moisture, dirt and loose foreign materials of any kind.

7.5 Pipes shall be protected from rust, corrosion and mechanical damage during transportation, shipment and storage.

7.6 Rust preventive used on machined surfaces to be welded shall be easily removable with a petroleum solvent or shall not be harmful to welding.

7.7 Both ends of the pipe shall be protected with the following material :

Plain end	:	Plastic cap
Bevel end	:	Wire, metal or plastic cover
Threaded end	:	Metal or plastic threaded cap

7.8 End protectors to be used on bevel ends shall be securely and tightly attached with belt or wire.

7.9 Steel end protectors to be used on galvanized pipes shall be galvanized.

8.0 ABBREVATIONS

API : American Petroleum Institute

ASME : American Society of Mechanical Engineers

ASTM : American Society for Testing and Material

CS	:	Carbon Steel
E.FS.W:		Electric Fusion Weld
ERW	:	Electric Resistance Weld
IBR	:	Indian Boiler Regulations
IGC	:	Inter Granular Corrosion
IS	:	Indian Standard
ISO	:	International Organization for Standardization
LT	:	Low Temperature
MR	:	Material Requisition
NACE		National Association of Corrosion Engineers
NB	:	Nominal Bore
NPT	:	National Pipe Thread
PMI	:	Positive Material Identification
SS	:	Stainless Steel
TES	:	Triune Energy Services Pvt. Ltd.

TECHNICAL NOTES

FOR

VALVES

Rev.	Date	Description	Prpd.	Chkd.	Appd.
4	26.11.19	Periodic Review/Updating and Issued for Implementation	RL	PP	RK

CONTENTS

1.0	SCOPE	4
2.0	CODES, STANDARDS AND SPECIFICATIONS	4
3.0	TECHNICAL REQUIREMENTS	5
4.0	DOCUMENTATION	6
5.0	DESIGN AND CONSTRUCTION	7
6.0	OPERATION	10
7.0	INSPECTION AND TESTING	11
8.0	RADIOGRAPHY OF CAST VALVES	13
9.0	IBR VALVES	13
10.0	MARKING	14
11.0	DISPATCH	14
12.0	ABBREVIATIONS	15
13.0	ATTACHMENTS	16

1.0 SCOPE

1.1 Supplier shall supply valves in accordance with the technical notes of valves and Valve data sheets along with auxiliaries, if any, such as gear operator, bypasses, drains etc. as specified in the valve data sheets, subject notes and other enclosures to the material requisition (MR).

1.2 Supplier shall quote in strict accordance with the valve data / specification sheets, subject technical notes and all other enclosures to the MR. Deviations to the specification / data sheets, subject technical notes and other enclosures of the MR. if any, shall be asked as explained in clause 2.0.

2.0 CODES, STANDARDS AND SPECIFICATIONS

2.1 Following codes and standards (latest edition) shall be followed for design, fabrication, testing.

API 6A	Specification for Wellhead and Christmas Tree Equipment
API 6D	Specification for Pipeline and Piping Valves
API SPEC 6FA	Specification for Fire Test for Valves
API 594	Check Valves: Flanged, Lug, Wafer and Butt-welding
API 598	Valve Inspection and Testing
API 599	Metal Plug Valves—Flanged, Threaded and Welding Ends
API 600	Steel Gate Valves—Flanged and Butt-welding Ends, Bolted Bonnets
API 602	Steel Gate, Globe and Check Valves for Sizes DN 100 and Smaller for the Petroleum and Natural Gas Industries
API 607	Fire Test for Quarter-turn Valves and Valves Equipped with Nonmetallic Seats
API 609	Butterfly Valves: Double Flanged, Lug- and Wafer-Type
ASME B16.5	Pipe Flanges and Flanged Fittings NPS ½ Through NPS 24
ASME B 16.9	Factory-Made Wrought Buttwelding Fittings
ASME B16.10	Face-to-Face and End-to-End dimensions of Valves
ASME B16.11	Forged Fittings, Socket-Welding and Threaded
ASME B16.20	Metallic Gaskets for Pipe Flanges Ring-Joint, Spiral-Wound, and Jacketed
ASME B16.21	Nonmetallic Flat Gaskets for Pipe Flanges

ASME B16.25	Butt welding Ends
ASME B16.34	Valves - Flanged, Threaded and Welding End
BS 1868	Specification for Steel Check Valves (flanged and Butt-welding Ends) for the Petroleum, Petrochemical and Allied Industries
BS 1873	Steel Globe and Globe Stop and Check Valves (Flanged and Butt- Welding Ends) for the Petroleum, Petrochemical and Allied Industries
BS EN ISO 15761	Steel Gate, Globe and Check Valves for Sizes DN 100 and Smaller, For the Petroleum and Natural Gas Industries
BS EN ISO 17292	Metal Ball Valves For Petroleum, Petrochemical and Allied Industries
MSS SP-25	Standard Marking System for Valves, Fittings, Flanges, and Unions
NACE MR-0175	Petroleum and Natural Gas Industries-Materials for Use in H2S-Containing Environments in Oil and Gas Production

2.2 Editions and addenda (if any) of referred Codes and standards shall the latest version valid on the date of award of contract.

2.3 For the sake of simplicity, the initials of the American Society to which the codes are referred to may be omitted in the specification. For example; B16.5 is a code referring to ASME; A106 is a standard referring to ASTM.

3.0 TECHNICAL REQUIREMENTS

3.1 For heavy valves, (above 50 Kg) provision for lifting shall be made by way of lugs, eyebolts or similar standard devices

3.2 All flanged valves shall have flanges integral (except forged valves) with the valve body. Flange face finish shall be normally specified in the valve specification sheet as serrated finish, 125 AARH etc. The interpretation for range of face finish shall be as follows:

Stock Finish	: 1000 µ inch AARH max.
Serrated Finish/ Smooth Finish/ 125 AARH	: Serrations with 125 to 250 µ inch AARH
Extra Smooth Finish/ 63 AARH	: 32 TO 63 µ inch AARH

3.3 For all butt weld end valves, the ends shall be beveled as per ASME B16.25. The contour of bevel shall be as follows :

MATERIAL	WALL THICKNESS	WELD CONTOUR
Carbon Steel (Except Low Temp. Carbon Steel)	Upto 22 mm	Figure 2 Type A
	> 22 mm	Figure 3 Type A

Alloy Steel, Stainless Steel and Low Temp. Carbon Steel	Upto 10 mm	Figure 4
	> 10 mm to 25 mm	Figure 5 Type A
	> 25 mm	Figure 6 Type A

3.4 If an overlay weld-deposit is used for the body seat ring seating surface, the corrosion resistance of seat ring base material shall be at least equal to the corrosion resistance of the material of the shell.

3.5 For valve body / bonnet forgings are acceptable where castings are specified, but not vice versa.

3.6 Material of construction of yoke shall be as a minimum equivalent to body / bonnet material.

3.7 Stem shall be forged or machined from a forged / rolled bar. Castings are not permitted except that integral stem of cast stainless steel ball valve is acceptable.

3.8 Stelliting / hard facing by deposition shall have minimum 1.6 mm thickness. Renewable seat rings shall be seal welded.

3.9 Ball valves, plug valves, and butterfly valves shall be supplied with a lever / wrench for valve operation except for gear operated / motor operated valves.

3.10 Socket weld (SW) end ball valves with non-metallic seats or seals shall be provided with 100 mm (4 Inch)) long seamless pipe nipple (compatible to body material) welded to each end of the valve. These nipples shall be welded to the valve by the supplier on both ends, before fitting packing seats and seals. These welds shall be 100% DP/ MPI tested. Thickness of pipe used for nipples shall be indicated in the valve specification sheet.

3.11 Face to face dimensions of all ball valves shall be as per ASME 16.10 corresponding ASME Class.

3.12 All ball valve body patterns shall be long pattern to ASME b16.10 and shall be quarter turn design.

3.13 All valves shall be supplied with API Monogram, whenever applicable.

3.14 For all valve forging, magnetic particle testing shall be carried out.

4.0 DOCUMENTATION

4.1 Supplier shall submit the following with the offer:

4.1.1 Manufacturer's complete descriptive and illustrative catalogue *1* literature.

4.1.2 Detailed dimensioned cross section drawing with parts / material lists, weight etc. for the ball valves, gate valves, globe valves, check valves, plug valves, butterfly valves, diaphragm valves and valves to manufacturer's standard.

4.1 .3 Drawings for valves with accessories like gear operator, hydraulic / pneumatic operator, motor, extension bonnet, extended stems with stands, bypass etc. giving major salient dimensions.

4.1.4 One copy of the valve data sheets duly signed and stamped as "Accepted". Deviation, if any shall be marked clearly.

4.1.5 If the valve is regretted or has no deviation, the manufacturer shall write clearly on valve specification sheets as "Regret" or "No Deviation".

4.1.6 For subject notes, if there is any deviation, the same shall be listed clause wise. Even clauses which are acceptable shall be categorically confirmed as "Accepted ".

4.1.7 On failure to submit documents as specified in clauses 2.1.1 to 2.1.6 above, the offer is likely to be rejected.

4.2 The following documents shall be submitted after placement of the order:

4.2.1 Supplier shall submit for approval drawings mentioned in clauses 2.1.2 and 2.1.3 before start of manufacture. No other drawing shall be submitted for approval.

4.2.2 Test report shall be supplied for all mandatory tests as per the applicable code. Test reports shall also be furnished for any supplementary tests as specified in clauses 3.5, 3.6 and 3.7.

4.2.3 Material test certificates (physical properties, chemical composition and heat treatment report) of the pressure containing parts shall be furnished for the valves

5.0 DESIGN AND CONSTRUCTION

5.1 For flanged valves with ring joint flanges the hardness shall be as follows:

Flange Material	Min. Hardness of Groove (BHN)
Carbon Steel	120
1 % Cr to 5% Cr	150
Type 304, 316. 321, 347	180
Type 304L, 316L	140

5.2 Following requirements for check valves shall be met over and above the valve spec sheet requirements:

5.2. 1 Unless specified otherwise in the data sheet all check valves 3" and above (except in Class 900, Class 1500 and Class 2500 rating) shall have a drain boss at location *"G"* (Refer Fig. No. 1 of ASME B16.34). A tapped drain hole with plug shall be provided as per ASME B16.34. Threads shall be as per ASME B1.20.1 (Taper) NPT.

5.2.2 Wherever check valve disc assembly is supported from the cover of the check valves the following shall be ascertained.

i) Positive location/ positioning of cover must be provided to ensure correct alignment of the valve disc.
ii) Hinge pin design must permit accurate alignment of the disc and valve seat.

5.3 Following valve bypass requirements shall be met:

5.3.1 By-pass requirement for Gate valves is indicated in the respective data sheets. As a rule, the following shall be followed :

ASME 150 Class	On sizes 26" & above
ASME 300 Class	On sizes 16" & above
ASME 600 Class	On sizes 6" & above
ASME 900 Class	On sizes 4" & above
ASME 1500 Class	On sizes 4" & above
ASME 2500 Class	On sizes 3" & above

5.3.2 The by-pass piping arrangement shall be such that clearance between main valve body and by-pass assembly shall be the minimum possible for layout reasons. Supplier shall follow the sketch sheet no. 17 of 17.

5.3.3 By-pass valve shall be a globe valve. The sizes shall be as under :

On main valve ≤ 4‖: 1/2‖ or more
On main valve > 4" but < 10‖: 3/4" or more
On main valve ≥ 10‖: 1" or more

The by-pass piping, fittings and valve tag numbers shall be as specified in Valve Data Sheet.

5.3.4 Supplier shall supply the by-pass valve duly tested and fitted to the main valve. Valves with by-pass shall have the direction of flow marked on the main valve. Bypass attachment to the main valve body shall not be screwed. All fillet welds for bypass installation shall be 100% examined by DP/ MP test.

5.4 For Low Temperature and Cryogenic valve requirements, refer 03-TS-003-A1

5.5 For Hydrogen service valve requirements, refer 03-TS-003-A2

5.6 Valves under "NACE" category shall meet the requirements specified in MR-01-75/ ISO 15156 unless otherwise specified.

5.7 For all austenitic stainless steel valves Inter Granular Corrosion (IGC) test shall be conducted as per the following:

5.7.1 ASTM A262 Practice "B" with acceptance criteria of "60 mils/year (max.)" for all materials - forged, rolled, wrought and casting.

Or

AS'TM A262 Practice "E" with acceptance criteria of "No cracks as observed from 20X Magnification" for all materials other than castings. "Microscopic structure to be observed from 250X magnification" in addition.

5.7.2 When specifically asked for in MR for high temperature application of some grades of austenitic stainless steel (eg. SS309. 310, 3 16, 316H etc.) ASTM A262 Practice "C" with acceptance criteria of "15 mils/year (max.)" shall be conducted.

5.7.3 For the IGC test as described in Clauses 3.7.1 and 3.7.2. Two sets of samples shall be drawn from each solution annealing lot. One set shall correspond to the highest Carbon content and the other to the highest pressure rating. When testing is conducted as per practice "E", photograph of the microscopic structure shall be submitted for record.

5.8 All types of 321 or 347 stainless steel valves shall be in a stabilized heat treated condition. Stabilizing heat treatment shall be carried out subsequent to the normal solution annealing. Soaking temperature and holding time for stabilizing heat treatment shall be 900°C and 4 hours respectively.

5.9 Spiral wound bonnet gaskets are to be provided with inner/outer ring except when encapsulated gaskets type body-bonnet joints are employed. Outer ring may be avoided in case of non-circular spiral wound gasket used in Class150 valve provided the outermost layer of spiral touches the bolts ascertaining the centering.

5.10 Ball / Plug / Butterfly Valves :

5.10.1 As a prequalification, fire safe test as per API 607/ API 6FA/ BS 6755 Part II shall be carried out on soft seated ball, plug and butterfly valves and also on lubricated plug valves. The test shall be witnessed and certified by a third party inspection agency like Lloyds, B.V, and DNV. Etc.The Supplier has to submit test certificate for the particular design of the valve offered.

5.10.2 Each valve shall be supplied with a lever /wrench except for gear operated / motor operated valves.

5.10.3 Soft-seated ball, plug and butterfly valves shall be supplied with antistatic devices

5.10.4 The ball of ball valve shall not protrude outside the end flanges of valve.

5.10.5 Ball valves shall be of floating ball /trunnion mounted type as per following

Class150	8" & below	Floating ball
	10" & above	Trunnion mounted
Class 300	4" & below	Floating ball
	6" & above	Trunnion mounted

Class 600	1.5" & below	Floating ball
and above	2" & above	Trunnion mounted

5.10.6 Unless otherwise specified in the P&IDs / data sheets. All ball valves shall be reduced bore type. Bore of all reduced bore ball valves shall be limited to one size lower than the nominal bore. Full bore valves shall be provided for piggable lines.

5.10.7 Butterfly valve shall be suitable for both _on-off' and throttling application under maximum differential pressure.

5.10.8 Disc Strength shall be conducted as per code for butterfly valves.

5.10.9 Bolting for tapped hole in Butterfly valve body shall be supplied by supplier.

5.10.10 Spark testing shall be carried out for soft material as per BS6374 part 5.

5.10.11 All trunnion-mounted ball valve shall be provided with spray loaded seat ring.

5.10.12 Trunnion mounted ball valve shall be supplied with provision for double block and bleed.

5.10.13 All ball valve shall be Bidirectional and anti blowout configuration.

5.11 The MOVs are to be installed in an open area and the actuators shall be suitable for all weather conditions. The testing of complete assemblies of MOVs along with the actuators shall be done by the supplier at his works.

5.12 All gate/ globe valve shall have solid wedge for size 1 ½‖ and below and flexible wedge for size 2‖ and above.

5.13 Stem protection is required for all CS gate and globe valves where 13% Cr. trims are specified. The stem shall be totally enclosed in a sleeve, which shall be packed with grease.

5.14 Choke valve

5.14.1 The choke valve shall be designed as per ASME B 16.34 / API 6A.

5.14.2 Unless otherwise specified all choke valve shall be adjustable type.

6.0 OPERATION

6.1 Valves shall be supplied with gear operations based on the following requirements:

Valves will be operated by means of reduction gears in the following cases:

Gate Valves : Class150 and Class 300 with 14 NPS larger.
Class 600 with 12 NPS and larger.
Class 900 with 6 NPS and larger.
Class 1500 and Class 2500 with 3 NPS and larger.

Globe Valves	:	Class 900 with 6 NPS and larger. Class 1500 and Class 2500 with 3 NPS and larger.
Plug Valves/ Ball Valves:		Class 150 and Class 300 with 6 NPS and larger. Class 600 with 4 NPS and larger. Class 900 with 3 NPS and larger. Class 1500 and Class 2500 with 3 NPS and larger.
Butterfly Valves	:	Class 150 with 10 NPS and larger. Class 300 with 6 NPS and larger.

For pressure balanced plug valves gear operation as per manufacturer's recommendations shall be acceptable provided the requirements specified in Cl. 4.5 are met.

6.2 Gear operator shall be as under, with position indicators for open / close positions, with limit stops (limit stops are not applicable for gate and globe valves).

For Gate / Globe / Diaphragm Valve	:	Totally enclosed bevel gear in grease case with grease nipples /plugs.
For Ball / Plug / Butterfly valve	:	Totally enclosed helical worm or combination of helical worm and spur gear in grease case with grease nipples / plugs.

6.3 Gear operators shall be so designed to operate effectively with the differential pressure across the closed valve equal to the cold non-shock pressure rating.

6.4 Ball, plug and butterfly valves even with wrench or lever operators shall have –open| and –closed" position indicators with limit stops.

6.5 Hand wheel diameter shall not exceed 750 mm and lever length shall not exceed 500 mm on either side, effort to operate shall not exceed 35 kg at lever / hand wheel periphery. In case these limits cannot be satisfied for any valve, a gear operator shall be provided as per Cl.4.6.

6.6 Where gear operator is not called for as per Clause 4.1 but supplier recommends a gear operator, supplier shall highlight such case(s).

7.0 INSPECTION AND TESTING

7.1 Every valve shall be subjected to all the mandatory tests and checks called in the respective codes / date sheet by any third party as approved by the purchaser. For IBR valves refer to clause 7.0

7.2 Every valve, its components and auxiliaries must be subjected to all the mandatory tests and checks called for in the respective codes, data sheets etc. by the manufacturer. Minimum 15 days notice shall be given to purchaser for all shop Inspection and testing.

7.3 All the mandatory tests required by the respective codes and data sheets, etc. shall be carried out by the manufacturer

7.4 All valves shall be hydrostatic and air tested for body and seat as per relevant piping Class and applicable codes and standards.
The sequence of testing of pressure testing of soft seated valves shall be as follow:-

First the hydro-test for body shall be performed, after this the hydro-test for seat shall be done and the low pressure air test shall be performed. In case the valve does not pass the low pressure air test and leakage is observed through the seat, vender shall replace the seat and low pressure air test is to be repeated.

7.5 The extent of inspection by Purchaser shall be as under. However, the exact extent with hold points shall be decided during review of the inspection plan to be submitted to Purchaser as part of the post-order documentation.

FORGED VALVES

- Visual and dimensional inspection.
- Review of material test certificates.
- Any mandatory or supplementary test.
- Hydrostatic test of all valves.
- Strip check on 1% of total ordered quantity of valves (min 1 no.) at random to verify compliance with specification requirements.

CAST STEEL VALVES

- Visual and dimensional inspection.
- Review of material test certificates.
- Review of radiographs / radiographic reports and reports of any other NDT tests, wherever applicable as per data sheets.
- Any mandatory or supplementary tests.
- Hydrostatic test for all valves.
- Strip check on 1% of total ordered quantity of valves at random to verify compliance with specification requirements.

7.6 In case of motor operated or actuator operated valves, functional / operational checks as per the requirements of the specifications shall be made on each valve.

7.7 Positive material identification (PMI) shall be performed as per the scope and procedure as defined in the TES std. 03-TS-039. ‒Specification for positive material identification (PMI) at supplier‘s works‖

8.0 RADIOGRAPHY OF CAST VALVES

8.1 No radiography is required for (demineralised water service and Cat -D fluid)

8.2 Radiography procedure, areas of casting to be radiographed, and the acceptance criteria shall be as per ASME B 16.34.

I. Special/Critical piping classes for Hydrogen/Hydrogen bearing hydrocarbon, Oxygen, NACE service and stress relieved amine services.

Class	Size Range	Extent of radiography
150	24‖ & below	50%
	26‖ & above	100%
300	16‖ & below	50%
	18‖ & above	100%
600 & above	All	100%

II. For LT / CRYO services:

Class	Size Range	Extent of radiography
150	24‖ & below	20%
	26‖ & above	100%
300	16‖ & below	20%
	18‖ & above	100%
600 & above	All	100%

III. Radiography requirement for casting for categories not mentioned above shall be as follows:

Class	**Size**	**Extent of radiography**
150 (CS)	24‖ & below	5%
	26‖ & above	100%
150 (AS & SS)	24‖ & below	10%
	26‖ & above	100%
300	16‖ & below	20%
	18‖ & above	100%
600 & above	All	100%

9.0 IBR VALVES

9.1 Valves described as ‒IBR Valves shall be in accordance with the latest IBR (Indian Boiler Regulations) as well as the other requirements specified in the specification.

9.2 For SW / BW end carbon steel valves under –IBR|, the body material chemical composition shall conform to the following :

Carbon (Max.)	:	0.25%
Others (S, P, Mn)	:	As per IBR

9.3 Valves coming under the purview of –IBR| (Indian Boiler Regulations) shall each be individually accompanied by IBR certification original in form III-C duly approved by IBR authority /Local authority empowered by the Central Boiler Board of India. Photocopy of original certificate duly attested by the local boiler inspector where the supplier is located is the minimum requirement for acceptance.

9.4 All valves shall be painted red in body bonnet/ body cover joint.

10.0 MARKING

10.1 Valve markings, symbols, abbreviations, etc. shall be in accordance with MSS-SP-25 or the standard referred to in the specification sheets, as applicable. Supplier‘s name, valve, size and rating, material designation, direction of flow (if any), etc. shall be integral on the body.

10.2 Each valve shall have a corrosion resistant tag giving size and valve tag / code no. securely attached on the valve body.

10.3 Paint or ink used for marking shall not contain any harmful metal or metal salts such as zinc, lead or copper which may result in corrosive attack on heating.

10.4 Carbon steel/ Alloy steel valves shall be painted with two coats of Inorganic Zinc Silicate (Minimum DFT 65 to 75 Microns)

11.0 DISPATCH

11.1 Valves shall be dry clean and free from moisture, dirt and loose foreign material of any kind.

11.2 Valves shall be protected from rust, corrosion and any mechanical damage during transportation, shipment and storage.

11.3 Rust preventive applied on machined surfaces to be welded shall be easily removable with a petroleum solvent or shall not be harmful to welding.

11.4 Each end of valves shall be protected as follows :

Flange Face	:	Wood or plastic cover
Bevelled End	:	Wood / metal / plastic cover
SW / Screwed End	:	Plastic cap

11.5 End protectors to be used on flange faces shall be attached by at least three bolts or wires through bolt holes and shall not be smaller than the outside diameter of the flange. Plastic caps for SW / Screwed end valves shall be of press fit type.

11.6 End protectors to be used on beveled ends shall be securely and tightly attached.

12.0 ABBREVIATIONS

AARH : Arithmetic Average Roughness Height

API : American Petroleum Institute

AS : Alloy Steel

ASME : American Society of Mechanical Engineers

ASTM : American Society for Testing and Materials

BHN : Brinell Hardness Number

BS : British Standards

CS : Carbon Steel

DP : Dye Penetrant

IBR : Indian Boiler Regulations

IGC : Inter Granular Corrosion

LT : Level Transmitter

MPI : Magnetic Particle Inspection

MR : Material Requisition

NDT : Non Destructive Testing

PMI : Positive Material Identification

SW : Socket Weld

TES : Triune Energy Services Pvt. Ltd.

13.0 ATTACHMENTS

03-TS-003-A1	Special requirement for low temperature and cryogenic valves
03-TS-003-A2	Special requirement for hydrogen service valves

BYPASS PIIPNG ARRANGEMENT

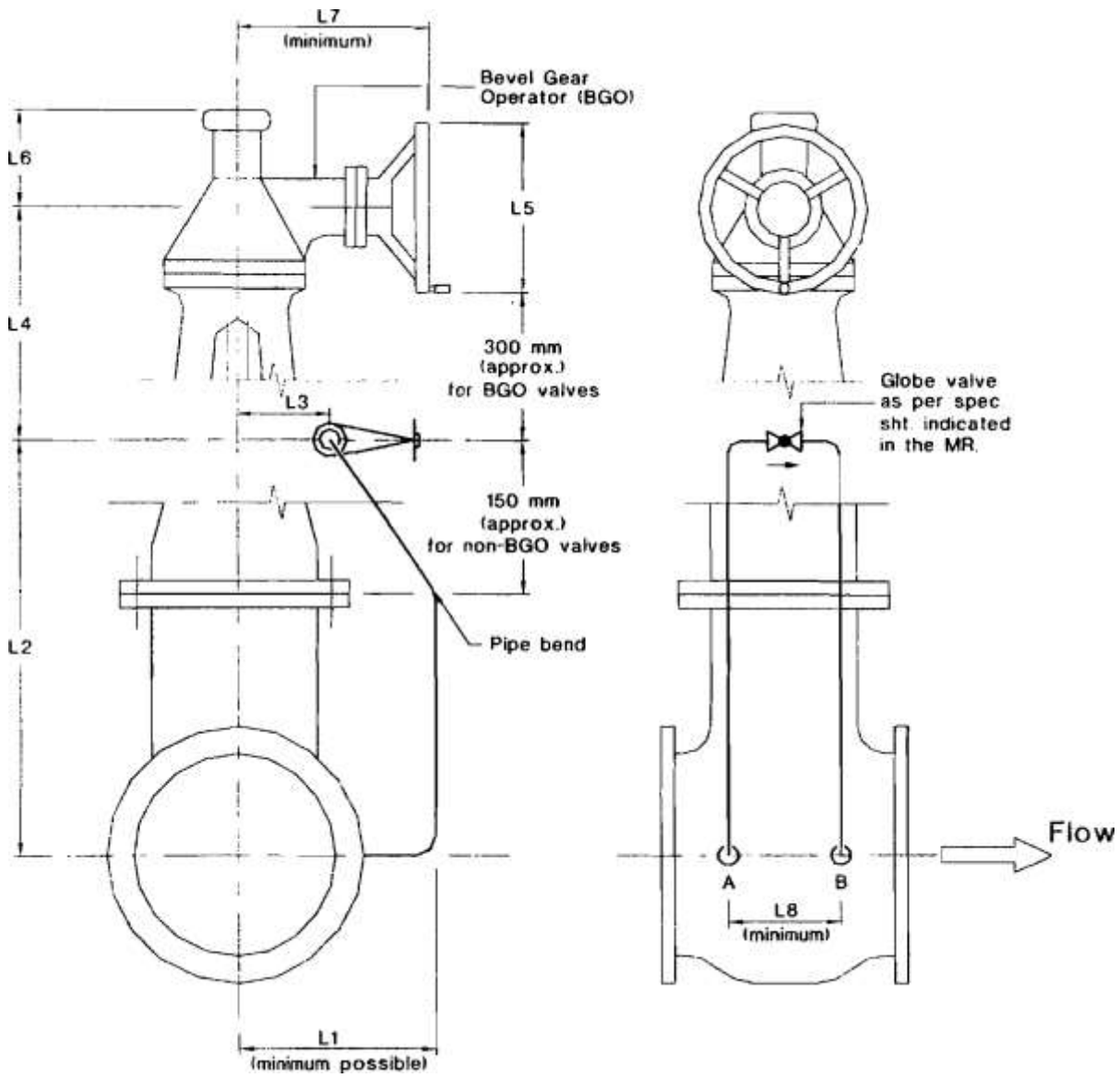

Notes –

1. The orientation and location of hand wheel of bevel gear operator and the bypass arrangement shall be strictly as per this sketch
2. The bypass pipe ends shall be socket/butt welded to the body wall of the main valve.
3. The bypass arrangement shall be properly clamped to and supported by the body of the main valve.
4. Basic design of bypass shall be to MSS-SP-45 and ASME B16.34.
5. Material of bypass pipe and 90° elbows shall be same or equivalent to the body material as per PMS.
6. This sketch is applicable for both BGO and non-BGO valves.
7. Supplier shall furnish dimensions L1 to L8.

TECHNICAL NOTES

FOR FITTINGS

4	26.11.19	Periodic Review/Updating and Issued for Implementation	RL	PP	RK
Rev.	**Date**	**Description**	**Prpd.**	**Chkd.**	**Appd.**

CONTENTS

1.0 GENERAL 4

2.0 CODES AND STANDARDS 4

3.0 TESTING 5

4.0 TECHNICAL REQUIREMENTS 5

5.0 IBR REQUIREMENTS 7

6.0 MARKING AND DISPATCH 9

7.0 ABBREVATIONS 9

ANNEXURE – I 11

1.0 GENERAL

Chemical composition, physical properties, Tests, Dimensions and Tolerances, Heat treatment and Marking shall conform to the latest codes and standards specified in the material requisition (MR). Deviation (s), if any shall be highlighted on a separate sheet by the supplier in the offer itself.

2.0 CODES AND STANDARDS

2.1 Following codes and standards shall be followed for design, fabrication, testing.

ASME B31.3	:	Process piping
ASME BPVC SEC. IX	:	Welding, Brazing and Fusing Qualification.
ASME BPVC SEC. II Part D	:	Materials
NACE MR-0175	:	Petroleum and Natural Gas Industries-Materials for Use in H2S-Containing Environments in Oil and Gas Production.
ASME B 16.9	:	Factory-Made Wrought Butt welding Fittings
ASME B16.11	:	Forged Fittings, Socket-Welding and Threaded
MSS SP 97	:	Integrally Reinforced Forged Branch Outlet Fittings - Socket Welding, Threaded and Butt welding Ends
MSS-SP-83	:	Class 3000 and 6000 Pipe Unions, Socket Welding and Threaded (Carbon steel, Alloy Steel, Stainless Steel and Nickel Alloys).

2.2 Editions and addenda (if any) of referred Codes and standards shall be the latest version valid on the date of award of contract.

2.3 For the sake of simplicity, the initials of the American Society to which the codes are referred to may be omitted in the specification. For example; B16.5 is a code referring to ASME; A106 is a standard referring to ASTM.

3.0 TESTING

3.1 Test reports shall be supplied for all mandatory tests as per the material specifications. Test reports shall also be furnished for any supplementary tests as specified in the MR and Clauses 4.7.3, 4.7.4 and 4.7.5. Material test certificates (Physical properties, chemical composition and heat treatment report) shall also be furnished for fittings supplied.

3.2 Positive material identification (PMI) shall be performed as per the scope and procedure as defined in the specification for positive material identification (PMI) at supplier's work (03-TS-039).

4.0 TECHNICAL REQUIREMENTS

4.1 All fittings shall be seamless in construction unless otherwise specified. If fittings are specified as welded the same shall conform to clause 4.5. Seamless fittings can be supplied in place of welded fittings but with maximum negative tolerance of 0.3 mm (max.) on wall thickness. Welded fittings shall not be acceptable in place of seamless fittings.

4.2 Outside diameters and wall thickness (unless otherwise mentioned) of Butt weld fittings shall be in accordance with ASME B36.10M and ASME B36.19M as applicable.

4.3 For reducing Butt-weld fittings having different wall thicknesses at each end. The greater wall thickness of the fitting shall be employed and inside bore at each end shall be matched with the specified inside diameter.

4.4 Bevel ends for all fittings shall conform to ASME B16.25. Contour of bevel shall be as follows: Check spelling

MATERIAL	WALL THICKNESS	WELD CONTOUR
Carbon Steel (Except Low Temp. Carbon Steel)	Up to 22 mm	Figure 2 Type A
	> 22 mm	Figure 3 Type A
Alloy Steel	Up to 10 mm	Figure 4
Stainless Steel and Low Temp. Carbon Steel	> 10 mm. and up to 25 mm	Figure 5 Type A
	> 25 mm	Figure 6 Type A

4.5 Welded Fittings:

4.5.1 All welded fittings shall be doubled welded. Inside weld projection shall not exceed 1.6mm. Welds shall be ground smooth at least 25mm from the ends.

4.5.2 For fittings made out of welded pipe, the welded pipe shall be double welded type and shall be manufactured with the addition of filler metal.

4.5.3 Welded tees shall not be of fabricated (stub-in) type.

4.5.4 All welded fittings shall be normalized and 100% radiographed by X-ray on all welds made by fitting manufacturers and also on the parent materials.

4.5.5 Welded pipes employed for manufacture of fittings shall be made by automatic welding only.

4.5.6 All welded carbon steel, alloy steel and stainless steel fittings shall have maximum negative tolerance of 0.3mm.

4.5.7 Specified heat treatment for carbon steel and alloy steel fittings shall be carried out again after weld repairs.

4.5.8 Irrespective of the material code requirement, all welded fittings indicated in MR as "CRYO" and "LT" shall meet impact test requirement of ASME B31.3. The impact test temperature shall be –196°C. and -45°C for stainless steel and carbon steel respectively, unless specifically mentioned otherwise in MR.

4.6 Requirement of PWHT shall be s per ASME 31.3.

4.7 Stainless Steel Fittings:

4.7.1 All stainless steel fittings shall be supplied in solution annealed condition.

4.7.2 Solution annealing for stainless steel fittings shall be carried out again after weld repairs.

4.7.3 For all stainless steel fittings (Seamless and Welded) inter granular corrosion test shall have to be conducted as per the following:
ASTM A 262 Practice "B" with acceptance criteria of "60 mils/ year (max.)".

Or

ASTM A 262 Practice "E" with acceptance criteria of "no cracks as observed from 20X magnification" and "microscopic structure to be observed from 250X magnification".

4.7.4 When specifically asked for in MR for high temperature application of some grades of austenitic stainless steel (eg. SS309, 310, 316, 316H etc.) ASTM A 262 Practice "C" with acceptance criteria of "15 mils/year" shall have to be conducted.

4.7.5 For the IGC test as described in Clauses 4.7.3 and 4.7.4, two sets of samples shall be drawn from each solution treatment lot, one set corresponding to the highest carbon content and other set to the highest fitting thickness. When testing is conducted as per ASTM A 262 Practice "E" , photograph of microscopic structure shall be submitted for record.

4.8 Thickness / schedule lower or higher than specified shall not be accepted.

4.9 Fittings under "NACE" category shall meet the requirements of NACE MR-01-75/ISO15156.

4.10 The gaskets contact surfaces of stub ends shall be flat with face finish specified in the requisition. Interpretation on the specified face finish is as follows:

Serrated Finish : Serrations with 250 to 500 μ inch AARH
Smooth Finish / 125 AARH : Serrations with 125 to 250 μ inch AARH

4.11 Stub ends shall not have any welds on the body**.**

4.12 For Galvanization, fittings shall be coated with zinc by hot dip process or electro zinc plating conforming to IS 4736/ ASTM A153 or ASTM B633 respectively.

4.13 For dual grades of SS where specified chemical composition and mechanical properties of both grades specified shall be ensured.

4.14 Threaded ends shall have NPT Taper threads in accordance with ASME B1.20.1 upto 1.5" NB and IS 554 from 2" to 6" NB.

4.15 Unless and otherwise specified in the MR, all socket welded and screwed fittings shall be in accordance with ASME B16.11 to the extent covered in the specification except for unions which shall be in accordance with MSS-SP-83.

4.16 Olet fittings like weldolet, sockolet etc shall be as per MSS-SP-97 fittings which are not covered in ASME, MSS-SP shall be as per manufacturer's standard. Contours of these fittings shall meet the requirements of ASME B31.3. Manufacturer shall submit drawings / catalogue of these items along with the offer.

4.17 Length of all long half couplings shall be 100mm unless otherwise specified in the MR.

4.18 All seamless pipes employed for manufacturing of fittings shall be required to have undergone hydro test to ASTM A530. Welded pipes employed for manufacture of fittings shall be tested as per Annexure-I.

4.19 The bevel ends of all butt weld fittings shall undergo 100% MP/ DP test.

4.20 Swage nipples if specified as pipe materials are acceptable in forging materials (upto 1.5") and wrought fitting materials (above 1.5") also in the corresponding forged material grades.

4.21 Abbreviations for ends of swages and nipples shall be as follows :

PBE : PLAIN BOTH ENDS
TBE : THREADED BOTH ENDS
TOE : THREADED ONE END
TSE : THREADED SMALL END
TLE : THREADED LARGE END

5.0 IBR REQUIREMENTS

5.1 IBR Documentation Required:

5.1.1 Fittings under the purveiw of "IBR" (Indian Boiler Regulations) shall be accompanied with IBR Certificate in form III-C duly approved and countersigned by IBR Authority / Local

Authority empowered by Central Boiler Board of India. Photocopy of the original certificate duly attested by the local boiler inspector where the supplier is located is the minimum requirement for acceptance.

5.1.2 For materials $1^1/_4$ Cr - $^1/_2$Mo (ASTM A234GR. WP11Cl.2 and ASTM A234 Gr. WP11W Cl.2) and $2^1/_4$ Cr – 1Mo (ASTM A234 Gr.WP22 Cl.1 and ASTM-A234 Gr. WP22W Cl.1), where fittings are manufactured from pipe, Form III-C approved by IBR shall include the tabulation of E_t, S_c, and S_r values for the entire temperature range given below. E_t, S_c, and S_r values shall be such that throughout the temperature range

$$\left.\begin{array}{l} E_t/\ 1.5 \geq \\ S_r/\ 1.5 \geq \\ S_c \quad \geq \end{array}\right| \quad S_A$$

S_A : Allowable stress at the working metal temperature.

E_t : Yield point (0.2% proof stress at the working metal temperature)

S_c : The average stress to produce elongation of 1% (creep) in 100000 hrs at the working metal temperature.

S_r : The average stress to produce rupture in 100000 hrs at the working metal temperature and in no case more than 1.33 times the lowest stress to produce rupture at this temperature.

S_A (psi)												
Temp(°F) Material	500	600	650	700	750	800	850	900	950	1000	1050	1100
A234 Gr. WP11 Cl.2 / A234 Gr. WP11W Cl.2	21700	20900	20500	20100	19700	19200	18700	13700	9300	6300	4200	2800
A234 Gr. WP22 Cl.1/ A234 Gr. WP22W Cl.1	17900	17900	17900	17900	17900	17700	17100	13600	10800	8000	5700	3800

Note : S_A values given above are from ASME B31.3-Values shall be as per the latest edition specified in project specifications

5.2.0 For allowable stress calculations of CS fittings, conditions mentioned in IBR requirement 370 shall be referred.

5.2.1 For Carbon steel fittings described "IBR", chemical composition shall conform to the following :

Carbon (Max.) : 0.25%

Others (S, P, Mn) : As prescribed in the IBR Regulations.

6.0 MARKING AND DISPATCH

6.1 Each fitting shall be legibly and conspicuously stamped in accordance with the requirements of applicable standards along with special condition like IBR, CRYO, NACE etc.

6.2 Steel die marking with round bottom punch may be permitted on body of Butt weld CS and lower alloy steel fittings, but for SS and higher alloy steel fittings, the same should be marked by electro-etching only.

6.3 Paint or Ink for marking shall not contain any harmful metal or metal salts such as Zinc, Lead or Copper which causes corrosive attack on heating.

6.4 Fittings shall be dry, clean and free of moisture, dirt and loose foreign materials of any kind.

6.5 Fittings shall be protected from rust, corrosion and mechanical damage during transportation, shipment and storage.

6.6 Rust preventive used on machined surfaces to be welded shall be easily removable with a petroleum solvent and the same shall not be harmful to welding.

6.7 Fittings under "IBR", "CRYO", "NACE" shall be painted in red, light purple, canary yellow strips respectively for easy identification, width of the strip shall be 25 mm. or as per color coding specified under project specifications.

6.8 Each end of fitting shall be protected with a wood / metal / plastic cover.

6.9 Each size of fitting shall be supplied in separate packaging marked with the Purchase Order No., Item code No. Material specification size, and Schedule / Thickness / Rating.

7.0 ABBREVATIONS

AARH : Arithmetic Average Roughness Height

ASME : American Society of Mechanical Engineers

ASTM : American Society for Testing and Material

CS : Carbon Steel

DP : Dye Penetrate

IBR : Indian Boiler Regulations

IGC : Inter Granular Corrosion

IS : Indian Standard

ISO : International Organization for Standardization

LT : Low Temperature

MP : Magnetic Particle

MR : Material Requisition

MSS : Manufacturer's Standardization Society

PMI : Positive Material Identification

SS : Stainless Steel

SMYS : Specified Minimum Yield Strength TES :

ANNEXURE – I

WELDED PIPE EMPLOYED FOR MANUFACTURE OF WELDED FITTINGS

ASTM A 671 GR. CC65, 70 (CL 32) ASTM A 672 GR. C60, 65, 70 (CL12, 22) ASTM A 671 GR. **CE**60, **CF**65, 70, 66 (CL32) ASTM A 691 GR.**1/2**Cr, 1Cr, 1-1/4Cr,2-1 / 4Cr, 5Cr, 9Cr (CL 42)	P = 2ST / D S = 90**%** OF SMYS T = NOM. WALL THK D = O.D. OF PIPE
API 5 L ASTM A**358** TP **304**, 304L, 304H, 316,316L, 316H, 321, 347 (CL1, 3, 4)	P = 2ST/D S = 85**%** OF SMYS T = NOM, WALL THK D = O.D. OF PIPE
ASTM B725	ASTM B725
ASTM B517	ASTM B517
ASTM B 514	ASTM B514

TECHNICAL NOTES
FOR
FLANGES, SPECTACLE BLINDS AND DRIP RINGS

4	26.11.19	Periodic Review/Updating and Issued for Implementation	RL	PP	RK
Rev.	**Date**	**Description**	**Prpd.**	**Chkd.**	**Appd.**

CONTENTS

1.0	GENERAL	4
2.0	CODES AND STANDARDS	4
3.0	TESTING	4
4.0	TECHNICAL REQUIREMENTS	5
5.0	IBR REQUIREMENTS	7
6.0	SPECIAL REQUIREMENTS FOR HYDROGEN SERVICE	7
7.0	MARKING AND DISPATCH	7
8.0	ABBREVATIONS	8

1.0 GENERAL

1.1 All items, their dimensions, Tolerances, Chemical composition, Physical properties, Heat treatment and Testing etc. shall conform to the latest codes and standards specified in the material requisition (MR). Deviation (s), if any shall be highlighted on a separate sheet by the supplier in the quotation itself.

2.0 CODES AND STANDARDS

2.1 Following codes and standards shall be followed for design, fabrication and testing.

ASME B31.3	:	Process piping
ASME BPVC SEC. IX	:	Welding, Brazing and fusing qualifications.
ASME BPVC SEC. II Part D	:	Material
NACE MR-0175	:	Petroleum and Natural Gas Industries-Materials for Use in H2S-Containing Environments in Oil and Gas Production
ASME B16.5	:	Pipe Flanges and Flanged Fittings NPS ½ through NPS 24
ASME B16.47 (Series B)	:	Large Diameter Steel Flanges NPS 26 through NPS 60
AWWA C207	:	Steel pipe flanges for waterworks service size 4 In. through 144 In. (100mm through 3600mm)
MSS SP 44	:	Steel pipeline flanges

2.2 Editions and addenda (if any) of referred Codes and standards shall be the latest version valid on the date of award of contract.

2.3 For the sake of simplicity, the initials of the American Society to which the codes are referred to may be omitted in the specification. For example; B16.5 is a code referring to ASME; A106 is a standard referring to ASTM.

3.0 TESTING

3.1 Test reports shall be supplied for all mandatory tests as per the relevant material specifications. Test reports shall also be furnished for any supplementary tests as specified in the requisition and Clause. 4.10, 4.12, 4.13 and 6.2.

3.2 Material test certificates (Physical property, chemical composition and Heat treatment report) shall also be furnished for the flanges, spectacle blinds and drip rings supplied.

3.3 Positive Material Identification (PMI) shall be performed as per the scope and procedures as defined in the „Specification for Positive Material Identification (PMI) at SUPPLIERs Works (03-TS-039).

4.0 TECHNICAL REQUIREMENTS

4.1 Ends of weld neck flanges shall be beveled to suit the schedule / thickness of matching pipe, as specified in the requisition.

4.2 Bevel end details for welding neck flanges shall be as per ASME B16.25. Contour of bevel end shall be as follows :

MATERIAL	WALL THICKNESS	WELD CONTOUR
Carbon Steel (Except Low Temp. Carbon Steel	Upto 22 mm	Figure 2 Type A
	> 22 mm	Figure 3 Type A
Alloy Steel Stainless Steel and Low Temp. Carbon Steel	Upto 10 mm	Figure 4
	> 10 mm. and Upto 25 mm	Figure 5 Type A
	> 25 mm	Figure 6 Type A

4.3 Bore of socket weld flanges and reducing blind flanges shall suit the outside diameter and schedule / thickness of matching pipe.

4.4 Bore of slip on flanges shall suit the outside diameter of matching pipe.

4.5 Flange face finish shall be normally specified in the requisition. The interpretation for range of face finish shall be as follows :-

Stock Finish	:	1000 µ inch AARH max.
Serrated/Smooth Finish/125 AARH AARH	:	Serrations with 125 to 250 µ inch
Extra Smooth/63 AARH	:	32 to 63 µ inch AARH

4.6 For Galvanization, flanges, spectacle blinds and drip rings shall be coated with zinc by hot dip process or electro zinc plating conforming to IS 4736/ ASTM A153 or ASTM B633 respectively.

4.7 Ends of screwed flanges, unless otherwise specified shall have taper threads as per ASME B 1.20.1(upto 1.5 in NB) and IS: 554 (for 2 in to 6 in NB).

4.8 For ring joint flanges, blinds and spacers the hardness shall be as follows:

FLANGE MATERIAL	MIN. HARDNESS OF GROOVE (BHN)
CARBON STEEL	120
1% Cr. TO 5% Cr.	150
TYPE 304, 316, 347, 321	180
TYPE 304L, 316L	140

4.9 For ring joint flanges, blinds and spacers, the hardness shall be recorded on the test report.

4.10 Flanges, spectacle blinds, drip rings under "NACE" category shall meet the requirements given in NACE MR-0175 / ISO 15156 unless otherwise specified.

4.11 All austenitic stainless steel flanges, spectacle blinds and drip rings shall be supplied in solution annealed condition.

4.12 I.G.C. test for Stainless Steels :

4.12.1 For all austenitic stainless steel flanges, blinds, drip rings and spectacle Blinds inter granular corrosion test shall have to be conducted as per follows:-

- ASTM A 262 practice „B" with acceptance criteria of 60 mils / year (max.)".

OR

- ASTM A 262 practice „E" with acceptance criteria of "No cracks as observed from 20X magnification" and "Microscopic structure to be observed from 250 X magnification".

4.12.2 When specifically asked for in MR for high temperature application of some grades of austenitic stainless steel (like SS 309, 310, 316, 316H etc.) ASTM A 262 practice „C with acceptance criteria of "15 mils/year" shall have to be conducted. When testing is conducted as per practice „E , photograph of microscopic structure shall be submitted for record.

4.12.3 For the IGC test as described in 4.12.1 and 4.12.2 two sets of samples shall be drawn from each solution treatment lot, one set corresponding to highest carbon content and the other corresponding to the highest rating / thickness.

4.12 All types of 321 and 347 SS flanges, spectacle blinds and drip rings shall be in a stabilized heat treated condition. Stabilizing heat treatment shall be carried out subsequent to the normal solution annealing.

Soaking temperature and holding time for stabilizing heat treatment shall be 900°C and 4 hours respectively.

4.13 For dual grades of SS where specified, chemical composition and mechanical properties of both grades specified shall be ensured.

4.15 AWWA C207 flanges shall be hub type.

4.16 Flange for 22" size shall be as per MSS-SP44 unless otherwise specified.

5.0 IBR REQUIREMENTS

5.1 Flanges, spectacle blinds and drip rings coming under the purview of IBR (Indian Boiler Regulations) shall be accompanied with IBR Certificate original in form III C duly approved and countersigned by IBR authority / local authority empowered by Central Boiler Board of India. Photocopy of original certificate duly attested by the local boiler inspector where the supplier is located is the minimum requirement for acceptance.

5.2 For carbon steel flanges described as "IBR" chemical composition shall conform to the following :-

Carbon (Max.)	:	0.25 %
Others (S, P, Mn)	:	As prescribed in IBR regulation

The chemical composition as indicated in this clause is not applicable for flanges other than IBR.

6.0 SPECIAL REQUIREMENTS FOR HYDROGEN SERVICE

6.1 Method of Manufacture

6.1.1 All carbon steel flanges having wall thickness 9.53 mm and above shall be normalised. The normalising heat treatment shall be a separate heat treatment operation and not a part of the hot forming operation.

6.1.2 All alloy steel (Cr-Mo) flanges shall be normalised and tempered. The normalising and tempering shall be a separate heat treatment operation and not a part of the hot forming operation.

6.2 Impact Test

6.2.1 for all carbon steels and alloy steels with wall thickness over 20 mm, Charpy-V Notch impact testing shall be carried out in accordance with paragraph UG-84 of ASME BPVC Section VIII, Div-1 per heat of material and per heat treating batch. Impact test specimen shall be in accordance with ASTM A370. Impact energies at 0°C shall average greater than 27J (20ft-lb) per set of 3 specimens, with a minimum of 19**J** (15ft-lb).

7.0 MARKING AND DISPATCH

7.1 All items shall be legibly and conspicuously stamped in accordance with the requirements of applicable ASME, API and MSS Standards. In addition, Item code, Purchase order no.

and special conditions like “IBR”, “CRYO” “NACE” “H_2” (hydrogen) etc. shall also be stamped.

7.2 All items coming under purview of “IBR”, “CRYO” “NACE” and “H_2”(hydrogen) shall be painted in red strips, light purple stripes, canary yellow stripes and sea green stripes (25 mm. width) respectively for easy identification or as per color coding specified under project specifications.

7.3 Paint or Ink for marking shall not contain any harmful metal or metal salts such as Zinc, Lead or Copper which cause corrosive attack on heating.

7.4 All items shall be dry, clean and free from moisture, dirt and loose foreign material of any kind.

7.5 All items shall be protected from Rust, Corrosion and Mechanical damage during transportation, shipment and storage.

7.6 Rust preventive on machined surfaces to be welded shall be easily removable with a petroleum solvent, and the same shall not be harmful to welding.

7.7 Each end of flange shall be protected with the following materials :

Flange face	:	Wood, Metal or Plastic Cover
Beveled end	:	Wood, Metal or Plastic Cover
Threaded end	:	Plastic Plug
Socket welding end	:	Plastic Cover or Plug

7.8 Each size of flanges, blinds etc. shall be supplied in separate packaging marked with the Purchase Order No., Material specification, Size and Rating.

8.0 ABBREVATIONS

AARH : Arithmetic Average Roughness Height

ASME : American Society of Mechanical Engineers

ASTM : American Society for Testing and Material

AWWA: American Water Works Association

BHN : Brinell hardness number

IBR : Indian Boiler Regulations

IGC : Inter Granular Corrosion

IS : Indian Standard

ISO : International Organization for Standardization

MR : Material Requisition

MSS	:	Manufacturer's Standardization Society
NACE	:	National Association of Corrosion Engineers
PMI	:	Positive Material Identification
SS	:	Stainless Steel
TES	:	Triune Energy Services Pvt. Ltd.

TECHNICAL NOTES

FOR

FASTENERS

4	26.11.19	Periodic Review/Updating and Issued for Implementation	RL	PP	RK
Rev.	**Date**	**Description**	**Prpd.**	**Chkd.**	**Appd.**

CONTENTS

1.0	GENERAL	4
2.0	ACCEPTABLE DEVIATIONS	5
3.0	MARKING AND DISPATCH	5
4.0	ABBREVATIONS	5

1.0 **GENERAL**

1.1 The process of manufacture, heat treatment, chemical and mechanical requirements and marking for all stud bolts, M/c bolts, Jack screws and nuts shall be in accordance with the codes / standards and specifications given in the Material requisition(MR). Deviation (s), if any, shall be clearly highlighted in the quotation. The applicable identification symbol in accordance with the material specification shall be stamped on each bolt and nut.

1.2 a) Test reports shall be supplied for all mandatory tests and supplementary test if any as per the relevant material specifications.

b) Material test certificate shall also be furnished. (Heat Analysis, Product Analysis and Mechanical Requirement).

c) Positive Material Identification (PMI) shall be performed as per the scope and procedure as define in the specification for positive Material Identification (PMI) at supplier's work (TES STD. 03-TS-039).

1.3 All bolting shall be as per ASME B18.2.1 for studs, m/c bolts and jackscrews and ASME B 18.2.2 for nuts.

1.4 Threads shall be unified (UNC for ≤ 1" dia and 8 UN for > 1" dia) as per ASME B1.1 with class 2A fit for studs, m/c bolts and jack screws and class 2B fit for nuts.

1.5 Stud bolts shall be threaded full length with two heavy hex. nuts. Length tolerance shall be in accordance with the requirement of table F2 of Annex F of ASME B16.5.

1.6 The nuts shall be double chamfered, semi-finished, heavy hexagonal type and shall be made by the hot forged process and stamped as per respective material specification.

1.7 Heads of jack screws and m/c bolts shall be heavy hexagonal type. Jackscrew end shall be rounded.

1.8 Each size of studs and m/c bolts with nuts and jackscrews shall be supplied in separate containers marked with size and material specifications. "CRYO" shall be marked additionally in case "CRYO" is specified in requisition.

1.9 All items shall be inspected and approved (stage wise) by any third party as approved by the purchaser.

1.10 The heat treatment for stud bolts and nuts shall be as per respective material code unless mentioned otherwise.

1.11 All austenitic stainless steel bolts, nuts, screws shall be supplied in solution annealed condition unless specified otherwise in Material requisition.

1.12 Any additional requirements specified in the requisition shall be fully complied with.

1.13 Stud bolts, m/c bolts, nuts and Jackscrews shall be impact tested wherever specified in the material specification and also where the material specification is indicated as "CRYO". For S.S. nuts and bolts, minimum impact energy absorption shall be 27 Joules and test temperature shall be –196 deg.C unless mentioned otherwise. For other materials impact energy and test shall be as per respective code.

1.14 Bolts / nuts of material of construction B7M / 2HM shall be 100% Hardness tested as per supplementary requirement **S3** of ASTM A193.

1.15 When specified as galvanized, the studs, m/c bolts and nuts shall be hot dip zinc coated in accordance with requirement of Class C of ASTM A 153.

1.16 Stud of 1" larger diameter is to be increased in length by a minimum of one Nut thickness to allow the use of hydraulic bolt tensioning equipment for flange joints in class 900 and above.

2.0 ACCEPTABLE DEVIATIONS

„Nuts" to ASTM A194 Gr.7 are acceptable in place of ASTM A194 Gr.4

3.0 MARKING AND DISPATCH

3.1 Bolting shall be marked according to relevant ASTM standard.

3.2 Bolts and Nuts shall be cleaned and greased or oiled before shipment and the Nuts shall be Shipped assembled on the bolts.

3.3 Bolting shall be packed in strong wooden boxes bound with steel strapping for adequate protection of the threads during shipment.

3.4 Authentic stainless steel bolting material shall be protected from Chloride attack, such as might occur from exposure to salt water spray or atmosphere during shipment, cleaning, fabrication, testing and storage.

3.5 All containers must be marked clearly with contents, purchase requisition, item number, commodity codes, description and job number listed.

4.0 ABBREVATIONS

ASME	:	American Society of Mechanical Engineers
ASTM	:	American Society for Testing and Material
CS	:	Carbon Steel
MR	:	Material Requisition
PMI	:	Positive Material Identification

TECHNICAL NOTES
FOR
GASKETS

4	26.11.19	Periodic Review/Updating and Issued for Implementation	RL	PP	RK
Rev.	**Date**	**Description**	**Prpd.**	**Chkd.**	**Appd.**

CONTENTS

1.0	GENERAL	4
2.0	CODES AND STANDARDS	4
3.0	TESTING	4
4.0	TECHNICAL REQUIREMENTS	5
5.0	ABBREVATIONS	6

1.0 GENERAL

1.1 All gaskets shall conform to the latest codes / standards and specifications specified in the material requisition (MR). Deviation (s), if any shall be highlighted on a separate sheet by the supplier in the quotation itself.

1.2 The process of manufacture, dimensions and tolerances not specified in Material Requisition shall be in accordance with the requirement of the manufacturer's standards.

2.0 CODES AND STANDARDS

2.1 Following codes and standards shall be followed for design, fabrication, testing.

ASME B31.3	:	Process piping
ASME BPVC SEC. II Part D	:	Materials
NACE MR-0175	:	Petroleum and Natural Gas Industries-Materials for Use in H2S-Containing Environments in Oil and Gas Production.
ASME B16.20	:	Metallic Gaskets for Pipe Flanges Ring-Joint, Spiral- Wound, and Jacketed
ASME B16.21	:	Nonmetallic Flat Gaskets for Pipe Flanges

2.2 Editions and addenda (if any) of referred Codes and standards shall be the latest version valid on the date of award of contract.

2.3 For the sake of simplicity, the initials of the American Society to which the codes are referred to may be omitted in the specification. For example; B16.5 is a code referring to ASME; A106 is a standard referring to ASTM.

3.0 TESTING

3.1 a) Test reports shall be supplied for all mandatory tests for sheet gaskets as per the standards specified in the Material Requisition.

b) Chemical composition of RTJ gaskets shall also be furnished in the form of test reports on samples.

3.2 Positive material identification (PMI) shall be performed as per the scope and procedure as defined in the specification for positive material identification (PMI) at supplier's work (03-TS-039) for ring type joint gasket.

3.3 Manufacturers test certificate for filler material and spiral material shall be given as per the relevant material specifications for spiral wound gaskets.

4.0 TECHNICAL REQUIREMENTS

4.1 Full face gaskets shall have bolt holes punched out.

4.2 Asbestos filler for spiral wound gaskets is not permitted.

4.3 a) All spiral wound gaskets shall be supplied with C.S. outer centering ring except for gasket material description suffixed as "(540+)"or "(CRYO)". In these cases outer centering ring shall be of SS 304 / 316.

b) Inner compression ring of S.S. shall be provided for the following, unless mentioned otherwise.

i) For gasket sizes 26" and above.
ii) For gasket class rating 900 and above.
iii) For gasket material description suffixed as "(540+)" or "(CRYO)".

4.4 Hardness of metallic RTJ gaskets shall not exceed the value specified below :-

RING GASKET MATERIAL	MAXIMUM HARDNESS (BHN)
Soft Iron	90
5 Cr. 1 / 2 Mo	130
Type 304, 316, 347	160
Type 304L, 316L	120

4.5 Face finish of metallic RTJ gaskets shall be 32 to 63 AARH.

4.6 Gasket of different types and sizes shall be placed in separate shipping containers and each container clearly marked with the size, rating, material specification and Item code.

4.7 All items shall be inspected and approved by any third party as approved by purchaser.

4.8 Any additional requirements specified in the requisition, shall be fully complied with.

Notes:

1. Non-metallic ring gaskets as per ASME B16.21 shall match flanges to ASME B16.5 upto 24" (except 22") and to ASME B16.47B above 24" unless specified otherwise. For 22" size the matching flange standard shall be MSS-SP44 unless specified otherwise.

2. Spiral Wound / RTJ gaskets to be as per ASME B16.20 shall match flanges to ASME B16.5 upto 24" (except 22" size) and to ASME 16.47B above 24" unless specified otherwise. For 22" size the matching flange standard shall be MSS-SP44 unless specified otherwise.

5.0 ABBREVATIONS

AARH	:	Arithmetic Average Roughness Height
ASME	:	American Society of Mechanical Engineers
ASTM	:	American Society for Testing and Material
BHN	:	Brinell Hardness Number
CS	:	Carbon Steel
ISO	:	International Organization for Standardization
MR	:	Material Requisition
PMI	:	Positive Material Identification
RTJ	:	Ring Type Joint
SS	:	Stainless Steel
TES	:	Triune Energy Services Pvt. Ltd.
NACE	:	National Association of Corrosion Engineers

SPECIFICATION FOR

FABRICATON AND ERECTION OF

UNDERGROUND PIPING

3	26.11.19	Periodic Review/Updating issued for implementation	RL	PP	RK
Rev.	**Date**	**Description**	**Prpd.**	**Chkd.**	**Appd.**

CONTENTS

1.0	GENERAL	4
2.0	CODES, STANDARDS AND REGULATIONS	4
3.0	MATERIALS	4
4.0	LAYING OF UNDERGROUND PIPING	5
5.0	INSPECTION	8
6.0	TESTING	9
7.0	RECORDS	10
8.0	ABBREVIATIONS	10

1.0 GENERAL

1.1 Scope

1.1.1 This specification, used in conjunction with the purchase documents, data sheets, and / or drawings, establishes the minimum requirements for installation and erection of underground steel piping including field assembly, cleaning, testing and inspection. Unless otherwise noted on the drawings, it includes all underground piping up to and including a termination point above ground or finished floor.

1.1.2 Also included are the requirements for field application of coal tar enamel coating and wrapping to construction joints, uncoated fittings and other specialties and to damaged areas of shop coated piping.

2.0 CODES, STANDARDS AND REGULATIONS

2.1 Following codes and standards shall be followed for design, fabrication and testing:

AWWA - American Water Works Association.
NFPA - National Fire Protection Association
ASTM - American Society for Testing and Materials

2.2 Regulations

Installations of underground steel piping shall be in compliance with all federal, state, local laws and regulations which are applicable, including the following:

OSHA - Occupational Safety and Health Administration

2.3 Editions and addenda (if any) of referred Codes and standards shall the latest version valid on the date of award of contract.

2.4 For the sake of simplicity, the initials of the American Society to which the codes are referred to may be omitted in the specification. For example; B16.5 is a code referring to ASME; A106 is a standard referring to ASTM.

3.0 MATERIALS

3.1 All materials used shall be new and undamaged and in accordance with TES (03-TS-01) Piping Material Specification, indicated on the drawings.

3.2 In truck shipments, the pipe shall be supported in wide cradles of suitably padded timbers hollowed out on the supporting surface to fit the curvature of the pipe, and all chains, cables or other requirement used for fastening the load shall be carefully padded. For small diameter pipe, sand or sawdust-filled bags may be used instead of hollowed out timbers.

3.3 All shop coated and wrapped piping shall be visually inspected at the job site for defects in application or damage during shipment. Minor defects shall be repaired. Materials indicating irremediable defects or excessive repairs shall be rejected.

3.4 Flanges, mating cast iron valves or equipment nozzles shall be flat face and the gasket shall be full faced.

3.5 Materials used for field coating operations, including solvents used for cleaning, shall conform to the requirements of AWWA C-203-66. When using plasticized coal tar tape, it shall consist of high tensile fabric pre-saturated with coal tar pitch with pliable coal tar coating bonded to both sides.

4.0 LAYING OF UNDERGROUND PIPING

4.1.1 The contractor shall lay the underground piping in accordance with the following clauses and as per the piping arrangement drawings issued during the course of construction. Coating and wrapping of the underground pipelines shall be in accordance with succeeding specifications.

4.1.2 The contractor shall dig the pipeline trenches where necessary, according to the drawing, true to the line and gradient as per specifications and as directed by the engineer-in-charge.

4.1.3 The contractor shall be responsible for correct layout and gradient of the line. Errors, if any, shall be rectified by the contractor at no extra cost to the owner.

4.2 Trenching: (refer civil specification - 04-TS-121)

4.3 Lowering and laying

4.3.1 The pipe shall be lowered either by mechanical method or by hand when the trench is ready and bottom of the trench is graded as per required pipe laying conditions and specifications.

4.3.2 Lowering by machine

The shop coated pipe already transported to the pipe laying site / convenient length of pipe assembly coated and wrapped near the trench after hydrostatic testing shall be placed on clean square cut skids suitably spaced so as to keep the pipe away from touching the ground. The pipe may be lowered down in the trench by the launcher cranes with sufficient care to protect the coating and wrapping of the pipeline.

At tie in welds and other places, contractor shall clean, prime coat and wrap manually. Also short sections of pipelines which are impracticable to shop coat may be hand coated but only on the prior written approval of the engineer-in-charge.

4.3.3 Lowering by hand

The pipe may be lowered with the help of tripods and chain pulley blocks into the trench immediately after the coating and wrapping. However, if in the opinion of the engineer-in-charge the temperature conditions do not allow direct lowering then the pipe shall be set down on clean square cut skids. The skids shall be so spaced as to keep the pipe away from touching the ground.

4.4 Method and time of lowering pipe

4.4.1 Under favorable temperature conditions and using methods which will not damage coating, the pipe may be lowered into the trench.

4.4.2 Pipe previously set on skids, because of unfavorable temperature conditions shall be lowered into the trench normally in the coolness of the morning and only when the temperature of the pipe is below the softening point of the coating materials.

4.4.3 All skid marks and other places of damage shall be thoroughly examined to ensure proper patching where necessary, before the pipe is finally lowered into the trench.

4.5 Handling coated pipe

4.5.1 Coated pipe shall not be placed in trench until cave in plugs, hard clods, stones, skids welding rods etc. have been removed from there. Where the trench has a hard or jagged bottom sufficient fine dust or sand shall be placed therein before the pipe is lowered.

4.5.2 Coated pipe shall not be handled or moved by means of cable or chains or by prying with skids or bars. It shall be tied in and lowered by using lowering-in belts of a standard width and design for the size of pipe being handled.

4.5.3 Coated pipe shall not be dragged along the ground or otherwise handled in a manner that will be detrimental to the coating.

4.6 Lining up and welding

4.6.1 The ends of the pipeline shall be kept securely closed to prevent entry of any foreign material / moisture after lowering into the trench.

4.6.2 Before making joints, the pipe shall be carefully laid so as to perfectly align in both plan and profile, and the enclosures provided shall be removed.

4.6.3 Tie-in shall be made in the coolness of the morning when the ambient temperature is not exceeding 29 deg. C or softening temperature of the coating material whichever is less. All beveling, aligning and welding shall be in accordance with the welding specification given in the tender.

4.6.4 Free access shall be provided for the welding of the circumferential joints by increasing the width and depth of the trench at these points. There should be no obstruction to the welder from any side so that good welded joint is obtained.

4.7 Testing of coating and wrapping

The completed system shall then be tested as per clause 6.0 and the field welded joints coated and wrapped as per specification 04-TS-136.

4.8 Back filling

4.8.1 After testing and inspection of the pipeline to the entire satisfaction of the engineer-in-charge, the trench shall be back filled with the same material as the pipe bed above the top of the pipe. No trench shall be back filled without the approval of the engineer-in-charge.

4.8.2 Backfilling with excavated material shall be done in layer of 200 mm, well watered and rammed to avoid any setting afterwards.

4.8.3 The contractor shall place soil over the trench to such a height as well in opinion of the engineer-in-charge, to provide adequately for future settlement of the trench backfill.

If due to exigencies of the work, some portion of the pipeline is back filled without approval of the engineer-in-charge, the engineer-in-charge shall have the right to order uncovering of the pipe for examination and the cost of such uncovering shall be borne by the contractor.

4.8.4 The backfill material shall be free from stone pieces.

4.8.5 Surplus excavated soil or rubbish material shall be removed by the Contractor at his own cost to a place designated by the engineer-in-charge.

4.8.6 When the trench has been dug through roads all backfill shall be thoroughly compacted, in certain cases special compaction methods may be required by the engineer-in-charge. This shall be done by the Contractor at no extra cost to the Owner.

4.8.7 When the trench has been dug through unlined ditches the backfill shall be thoroughly compacted in 150 mm layers for a distance of 1.50m beyond the outside banks of the ditch on either side. The banks of the ditch shall also be compacted in 150 mm layers at no extra cost to the owner.

4.8.8 After the roads have been already graded, if they are trenched or otherwise disturbed by the contractor during laying of the pipelines, the contractor shall restore the road to its original level and condition. In the event the contractor is required to place extra fill gravel or other special materials, it shall be done by him without any extra cost to the owner.

4.9.0 Clean up of surroundings

4.9.1 As soon as the backfill is completed, the contractor shall immediately clean up the adjoining area by removing all surplus and defective material and dispose of all refuse such as spurs, sheet-iron, broken skids etc. to the complete satisfaction of the engineer-in-charge.

4.9.2 The earth on both sides of the pipeline trench which has been disturbed during the construction of the pipeline shall be smoothened and left in a condition satisfactory to the engineer-in-charge.

5.0 INSPECTION

5.1 General

5.1.1 Owner's inspector shall have free access to all places where the work is being done or any other thing and place concerned with the work.

5.1.2 Owner is entitled to send his own Inspector, to field or shops where prefabrication and erection of pipelines are being done, with the following but not limited to :

(i) To check that the welding performance and welding equipments used on the job are suitable and conform to the relevant standards.

(ii) To supervise welding procedure qualification.

(iii) To supervise welder performance qualification.

(iv) To check whether welding is conforming to relevant specification and the practice followed is in accordance with good pipeline construction practice.

(v) To check any other performance to ensure quality of work.

5.1.3 Contractor shall notify sufficiently in advance the commencement of qualification tests, welding work and acceptance tests, to enable the Owner's Inspector to supervise the same.

5.1.4 Contractor shall provide the owner's Inspector with all facilities necessary for carrying out his work at no extra cost to the owner.

5.1.5 Approval from the owner's Inspector shall not relieve the contractor partially or fully of his responsibilities and guarantees under this contract.

5.1 Visual inspection

Inspection of all welds shall be carried out as per ASME B 31.3. Finished welds shall be visually inspected for parallel and axial misalignment of the work, cracks, inadequate penetration unrepaired burn-through, dimensions and other surface defects and it may present a neat workmanship.

5.2 Repairs or removal of defects

5.3.1 Defects which are not within the acceptable limits shall be removed from the joint completely by chipping or grinding.

5.3.2 When the whole joints are found unacceptable, the weld and the ends of the joints shall be restored according to relevant clauses under fabrication.

5.3.3 No repair shall be carried out without prior authorization of the engineer-in-charge.

6.0 TESTING

6.1 General

6.1.1 All underground pipes shall be tested for leakages to a hydrostatic test pressure of 18 Kg/cm^2.

6.1.2 The testing shall be carried out in convenient section as approved by the engineer-in-charge. The joints of the pipe connecting the testing section shall be 100% radio graphed.

If some defect is noticed during the hydrostatic testing, the same shall be brought to the notice of engineer-in-charge. Joints, if leaking, shall be rectified as per the welding specifications and instructions of engineer-in-charge and tested to the satisfaction of engineer-in-charge at no extra cost to the Owner.

6.1.3 The engineer-in-charge shall be notified in advance by contractor for all testing. The hydrostatic testing / flushing of all the piping shall be carried out by the contractor at his own cost.

6.1.4 Contractor shall make his own arrangements for flushing at suitable points as per the instructions of the engineer-in-charge. Any extra work / modifications on this account shall be done by the contractor at his own cost.

6.2 Test medium

Soft water shall generally be used as the testing medium for the hydrostatic testing of piping system.

6.3 Cleaning

All systems shall be cleaned and flushed free of all dirt, debris or loose foreign material after testing.

6.4 Temporary blinds

Open ends of piping system such as at pumps or wherever equipment has been removed or disconnected prior to hydrostatic testing or a termination point of piping branch connections shall be blinded off by temporary blind flange made out of 10 mm thick M.S. plate.

6.5 Venting

All piping systems and equipments shall be properly vented to remove air from the system during filling.

6.6 Pressurizing

6.6.1 Pressure shall be applied by means of suitable test pump which shall not be connected to the system until ready to test. A pressure gauge shall be provided at the pump discharge for guidance in bringing the system up to pressure. The pump shall be attended to

constantly during the test by an authorized operator. The pump shall be disconnected immediately after the test pressure is reached.

6.6.2 The test pressure is to be maintained for sufficient time to permit complete inspection of the system under test but in no case shall the time be less than ten minutes. Test shall be considered complete only when approval is given by the engineer-in-charge.

6.7 Test gauges

Contractors own test gauge shall be installed as close as possible to the lowest point in the system being tested. Prior to the installation, the test gauge shall be checked against a standard gauge or calibrated with the aid of a dead weight tester. Calibration of test gauges shall be the responsibility of the contractor.

6.8 Draining

6.8.2 All lines and equipments shall be completely drained after the hydrostatic test of a system has been completed. High point vents shall be open to prevent excessive vacuum and permit complete draining.

6.8.3 If it becomes necessary to leave a system filled with the testing medium for any abnormal length of time, in that case venting shall be made to provide for possible liquid expansion with change in ambient temperatures.

7.0 RECORDS

Records in triplicate shall be made for each piping system as follows:

7.1 In case of underground piping, layouts giving actual elevations of pipelines as laid.

7.2 Test certificates containing date of test, identification of the piping system, test fluid used, test pressure and approval of owner's Inspector.

7.3 Certificates for flushing containing flushing medium used, identification of the piping system, date of flushing and approval by owner's Inspector.

8.0 ABBREVIATIONS

ASME : American Society of Mechanical Engineers

ASTM : American Society for Testing and Materials

OSHA : Occupational Safety and Health Administration.

AWWA : American Water Works Association.

NFPA : National Fire Protection Association

TES : Triune Energy Services Pvt. Ltd

वैसल्स, पाइपिंग तथा इक्वीपमैंट्स के ऊष्ण इन्स्यूलेशन हेतु मानक विनिर्देश

STANDARD SPECIFICATION FOR HOT INSULATION OF VESSELS, PIPING AND EQUIPMENTS

Abbreviations:

Ih	:	Insulation for heat conservation
It	:	Insulation for steam traced surfaces
Ie	:	Insulation for electrically traced surfaces
Is	:	Insulation for personal safety
Ij	:	Insulation for steam jacketed surfaces

CONTENTS

1.0 GENERAL 5

2.0 DESIGN BASIS 5

3.0 MATERIALS 8

4.0 APPLICATION 16

5.0 INSULATION FINISH 28

6.0 GUARANTEE AND TEST CERTIFICATES 32

7.0 REFERENCE CODES AND STANDARDS 32

FIGURES

NO.	DESCRIPTION
1.	Pipe Insulation Details (Fibrous & Rigid Insulation)
2.	Pipe Insulations: Method of staggering of sections Rigid & Fibrous Insulation (Preformed Pipe Sections only)
3.	Horizontal Pipe: Fibrous Mattress Insulation; Detail of Spacer Rings for Cladding Support
4.	Detail of Spacer Ring Fibrous Insulation (Mattress)
5.	Bolted Insulation Support for Vertical Pipe
6.	Insulation Details for Bends / Elbows
7.	Insulation Details: Pipe Bends & Elbows
8.	Insulation Details: Pipe Branched & Reducers
9.	Insulated Removable Cover: Valves
10.	Insulation Removable Cover: Flanged Joints
11.	Insulation Details: Pipe Supports
12.	Insulation for Steam Traced Piping
13.	Horizontal Equipment Insulation
14.	Horizontal Equipment Heads
15.	Use of Flexible Insulation in combination with Rigid Insulation to compensate for Vessel Expansion
16.	Insulation details: Vertical Vessel
17.	Insulation Details: Vertical Vessel Heads
18.	Insulation Details: Vertical Vessels
19.	Insulation Details: Vertical Storage Tank
20.	Insulation Details: Sphere

1.0 GENERAL

1.1 Scope

1.1.1 This specification covers design and material requirements for above ground, external insulation of piping and equipment operating between ambient temperature and 760°C for the purpose of heat conservation, process stabilization, temperature maintenance, personnel protection and fire protection. Wherever necessary this specification indicates the basis for selecting a criterion.

1.1.2 This specification is suitable for use in normal process plant atmospheres. Alternative designs and materials would be specified if necessary for corrosive atmosphere or potential leaks and spills of chemicals.

1.1.3 All the codes/standards mentioned in this specification shall be of latest issue.

1.1.4 This specification does not cover cold service insulation. For cold services, Specification 6-44-0003 is applicable.

1.1.5 This specification does not cover insulation for boiler or fired heaters and associated air heaters, economizers, flue ducting and air ducting.

1.1.6 Piping, equipment, storage tanks & vessels requiring insulation and the temperatures (operating temperatures) shall normally be specified, as applicable, on the following project documents:

- Piping and Instrument Diagrams (P&IDs) and Line Lists.
- Piping General Arrangement Drawings & Isometrics.
- Instrument Piping Details and Schedules.
- Vessel, Exchanger, Storage Tank and sphere documents and Insulation Schedules.
- Equipment suppliers General Arrangement Drawings for equipment items in Package plant.

2.0 DESIGN BASIS

2.1 Criteria

2.1.1 Insulation thickness tables are based on heat loss criteria. For various parameters considered for insulation thickness calculations 'Guideline for selecting insulation material & thickness', Document No. 7544-02-41-GL-56 may be refereed. **Selected 'Insulation thickness tables' for a particular job shall be as per 'Job Process design basis'.**

2.1.2 Insulation is required for any of the following purposes, as indicated in P&IDs and line lists:

- Heat conservation
- Process stabilization to assist process control.
- Steam tracing
- Electric tracing
- Hot water or solvent tracing (liquid)
- Hot oil tracing
- Steam jacketing
- Hot water or liquid jacketing

- Hot Oil Jacketing
- Fire protection
- Personnel protection.

2.1.3 Insulation for 'Personnel protection' is applicable where exposed surface temperatures exceed 65°C in normal or short-term operating conditions. Over internally insulated piping and equipments, provide open mesh metal guards and for surfaces which are not internally insulated, provide insulation on those parts of surfaces with which operating and maintenance personnel may come in contact while performing routine duties. The actual extent of insulation shall be determined by Field Construction Personnel and/or operating personnel using the criteria that the exposed surfaces located within 600mm horizontally or 2100mm vertically of a normal access, walkway or work area are to be insulated.

2.1.4 Internally refractory lined piping and equipment and any other items for which heat loss is essential shall not be insulated. (See para 2.3.6).

2.1.5 Insulation is not desired for piping and equipment for which heat loss is desired - excepting for personnel protection or to avoid thermal stress problems.

2.1.6 Instruments and associated piping(other than impulse piping/tubing) subject to operating flow and/or temperature conditions prevailing in the connected piping or equipment shall be insulated to the same requirements as that of piping or equipment. For impulse piping/tubing refer impulse piping insulation specifications described elsewhere in the document.

2.2 Extent of Insulation on Piping Systems

2.2.1 Insulated piping systems shall have straight pipe, bends, tees and pipe-fittings completely insulated.

2.2.2 Unless otherwise specified, all valves and flanged joints shall be completely insulated only in steam, condensate service, hot oil lines and in lines which are trace heated or jacketed to maintain temperatures.

2.2.3 For bucket and float type traps the inlet piping and trap shall be insulated.

2.2.4 Insulation on inlet piping to thermostatic and thermodynamic steam traps shall terminate at approximately 500mm before the trap.

2.2.5 Steam trap outlet piping other than closed condensate recovery system shall not be insulated except for personnel protection reasons.

2.2.6 Heat traced instrumentation shall be insulated. The fluid containing sections of such instruments and the associated piping shall be completely insulated. Indication length shall remain visible. Instrumentation other than heat traced shall not be insulated unless otherwise required by Instrumentation department.

2.2.7 Insulation shall not be applied to the following, unless otherwise specified.

- Piping which becomes hot intermittently, such as relief valves, vents, steam-out and snuffing steam systems, flare and blowdown systems.

- Steam condensate lines downstream of steam traps discharging to drainage system, unless otherwise mentioned.

- Supports for piping, excluding pipe hangers to the extent covered by insulation.

- Steam Traps (except as noted in paragraph 2.2.3).

- Valves, including control valves and flanges in process piping systems (except as noted in paragraph 2.2.2). However, personnel protection insulation for these items shall be applied, as required.

- Pipe Union fittings.

- Thermowell bosses, temperature and pressure tappings.

- Expansion joints, hinged joints and hose assemblies

- Sight flow indicators.

- Flange joints in Hydrogen service.

2.3 Extent of Insulation on Equipments

2.3.1 Support skirts of insulated vertical vessel greater than 1200mm diameter shall be insulated both internally and externally for a minimum distance of 600mm below the bottom tangent line. The insulation shall terminate not less than 300mm above the anchor chair.

2.3.2 Support skirts of insulated vertical vessels of 1200mm and less shall be insulated externally only, as described in para 2.3.1.

2.3.3 Bottom heads of insulated vertical vessels enclosed by a support skirt shall be insulated without finishing material and shall be insulated only when the vessel outside diameter is greater than 1200mm.

2.3.4 Turbines shall be insulated for heat conservation.

2.3.5 Liquid ends of pumps shall be insulated when heat traced and jacketed.

2.3.6 Insulation shall not be applied to the following unless otherwise specified:

- Pumps with operating temperature below 200°C unless pumped fluid has a pour point above minimum design ambient temperature.

- Fans, compressors and blowers.

- Liquid ends of pumps except as noted in the paragraph 2.3.5 above.

- Internally insulated or refractory lined equipment unless specially designed for metal temperature control.

- Heads of vessels enclosed by support skirts with vessel diameters 1200mm and less.

- Internal surfaces of insulated vessel support skirts with vessel diameter 1200mm or less.

- Turbine casings to be insulated shall exclude shaft seal caps, shaft bearing housings, throttle valves, governors and supports.

- Exchanger channel and covers; shell and channel flanges & Exp. Joints.

- Nozzles flanges, manholes, handholes and flanges of equipment.

- Surfaces of coolers and condensers.
- Nameplates of all equipment items.
- Thermowell bosses, temperature and pressure tappings.

3.0 MATERIALS

3.1 General

3.1.1 Insulation materials shall be as per specifications described in para 3.2. **Selected material(s) for a particular job shall be as per Process Design Basis.**

3.1.2 All materials shall be of high quality and good appearance. Insulation materials shall be of low chloride content, chemically inert, non-sulphurous , rot proof, vermin proof, impervious to hot water and steam, non-injurious to health and non-corrosive to steel and aluminium (even if soaked in water at ambient temperatures for extended periods).

3.1.3 The use of insulation or finishing materials containing ASBESTOS in any form is not permitted.

3.1.4 No inflammable material shall be attached to the insulation.

3.1.5 Fibrous insulants, calcium silicate, perlite and ceramic fibres can be used for the full temperature range mentioned against the respective material, for all applications except for electrically heated applications .

3.1.6 For electrically heated applications Polyurethane foam (PUR) or Polyisocyanurate (PIR) blocks shall be used in combination, with rockwool as inner layer.

3.1.7 For low operating temperature (upto 125°C) services a suitable moisture barrier shall be used.

3.1.8 Insulation materials to be used over austenitic stainless steel surfaces shall be zinc free and shall be inhibited with sodium silicate as per ASTM C-795.The amount of leachable chloride in the insulation material (except for calcium silicate) before application shall not exceed 10ppm. In case of calcium silicate it should not exceed 50ppm. For the chemical analysis of insulation materials ASTM C-871 shall be referred.

3.1.9 Dimensions and dimensional tolerances for pipe sections, mattresses & slabs shall generally be as per respective codes unless otherwise mentioned. The number of pieces to be used shall be as less as possible. When installed the insulation shall fit snugly and shall have a tight joint.

3.1.10 The insulation materials shall be as per ASTM/BS standards/codes for overseas jobs unless otherwise specified.

3.2 Insulation Materials

3.2.1 Fibrous Materials (Rockwool & Glass Wool)

1 Shall be a preformed insulation and shall be of long fibred rock or glass material processed from a molten state into fibrous form bonded with a binder and suitable for the intended operational temperature range from ambient to 550°C and 350°C for rockwool and glasswool respectively. Slagwool is not acceptable.

2 Unless otherwise specified, insulation material shall strictly conform to all the requirements of quality standards listed below:

• Preformed pipe insulation	IS:9842/ASTM C547 TYPE II or TYPE III
• Metal-mesh covered bonded mineral fibre blanket and blanket type pipe insulation	IS:8183/ASTM C592 CLASSII for piping & equipt. Blankets shall be faced on one side with 20mm galvanised 22SWG wiremesh stitched through with 22 SWG galvanized lacing wire. For insulation over 'Austenitic SS Piping & Equipment' instead of galvanized wiremesh & lacing wire SS304/316 wiremesh & lacing wire shall be applied.
• Bonded Mineral fibre slab insulation	IS:8183
• Mineral fibre block & board thermal insulation	ASTM C612 TYPE IV/ TYPE V

3 Insulation shall conform to the requirements of respective codes, unless otherwise specified herein and shall be tested and test certificates on representative samples furnished as per IS:8183/IS:9842/ASTM:C547/ ASTM:C592 /ASTM:C612.

• Density(min)	140 & 128 kg/m^3 for resin bonded pipe sections and resin bonded LRB blankets respectively of rockwool; 80 & 64 kg/m^3 for resin bonded pipe sections and resin bonded curved beveled segments or LRB slabs respectively of glasswool. Max resin content at the above mentioned densities shall be 2% and 5% for rockwool and glasswool respectively. 140 kg/m^3 for IS8183 bonded mineral fibre slabs and 240 kg/m^3 /320 kg/m^3 for ASTM C612 TYPEIV /TYPE V respectively.	
• Thermal Conductivity(max)*	**Mean Temperature ^{O}C	Thermal Cond. (mW/cm ^{O}C)
	50	0.43
	100	0.52
	150	0.62
	200	0.68
	250	0.80
	300	0.90
	*The values mentioned are for insulation material as per IS code; For Apparent thermal conductivity for material as per ASTM codes refer respective ASTM code.	
	**Mean Temperature = (Hot Face Temperature + Cold Face Temperature) / 2	
• Linear Shrinkage	Not more than 2 percent when subjected to soaking heat at the stated max. temperature of use (550°C), for 24 hours.	
• Compressive Strength (minimum) at 10% deformation	250 kg/m^2 for resin bonded pipe sections, curved bevelled segments and LRB slabs; 120 kg/m^2 for LRB blankets(mattresses) unless otherwise specified.	
• Chloride Content	For stainless steels, with inhibitors less than 10 PPM, for other materials not to exceed 20 ppm.	

3.2.2 Rigid Materials (Calcium Silicate, Moulded Expanded Perlite, Polyisocyanurate/Polyurethane Foam Blocks and Cellular Glass)

1 Calcium Silicate

It shall be suitable for temperatures upto 760°C. Insulation shall conform to the requirements of respective codes, unless otherwise specified herein and shall be tested and test certificates on representative samples furnished as per IS 9428/ASTM C533 TYPE II.

• Bulk Density	200 to 280 kg/m^3.

• Compressive Strength	Reduction in thickness shall not exceed 10% when tested a) Dry under a load of 415 kN/m² and b) Wet (after 18 hrs immersion in water) under a load of 170 kN/m².	
• Heat Resistance	When tested at increasing temperatures, the material shall be deemed suitable for use under conditions of soaking heat, for 24 hrs, upto a temperature at which the following requirements are met: Max.Linear Shrinkage(length) Max. Loss in Mass Compressive Strength	 2% 15% Reduction in thickness not exceeding 10% under a load of 345 kN/m².
• * Thermal Conductivity (max)	**Mean Temperature °C	Thermal Conductivity(W/mk)
	200	0.080
	250	0.088
	300	0.097
	350	0.110
	400	0.121
	450	0.135
	500	0.148
• Chloride content	Not to exceed 50 PPM for CS as well as SS	
*The values mentioned are for insulation material as per IS code; For Apparent thermal conductivity for ASTM code material refer respective ASTM code.		
**Mean Temperature = (Hot Face Temperature + Cold Face Temperature) / 2		

2 Moulded Expanded Perlite

Insulation shall be block form and pipe sections in accordance with ASTM C 610. It shall be compounded from moulded expanded perlite & sodium silicate binder and shall be suitable for temperatures upto 550°C. Insulation shall conform to requirements of respective codes, unless otherwise specified herein and shall be tested and test certificates on representative samples furnished as per ASTM C 610. **'Perlite material shall be tested as per C-692 for application over SS surfaces'.**

• Bulk Density(min)	192 kg/m³. Test as per ASTM C302 (pipe) & ASTM C303(block)	
• Compressive Strength (for blocks only) at 5% deformation	412 kPa(Min). Test as per ASTM C165.	
• ApparentThermal Conductivity	Shall be as given below: Test method shall be as per ASTM C177/C518 (Block) & ASTM C335 (Pipe)	
	Mean Temp °C	Thermal Conductivity Max. W/mK
	93	0.079
	149	0.086
	204	0.095
	260	0.106
	316	0..111
	371	0.126
• Water Absorption of thermal insulation After heat aging & 48 hr water immersion, moisture gain, % by weight (max)	149	50
	260	50

	371	60
• Linear shrinkage	For length & width 2%(max) and for thickness 8%(max) at 649 °C for 24hrs	
• Chloride content	For stainless steels, less than10 PPM, for other materials not to exceed 20 ppm	

3 Polyisocyanurate (PIR) / Polyurethane (PUR)

Rigid Polyisocyanurate / Poluurethane foam block, pipe and fitting insulation shall be manufactured with polyester or polyether resins, flammability retarding agents, special catalysts and a blowing agent. This can be used upto a temperature of 125 deg.C. Insulation shall conform to following requirements and shall be tested and test certificates on representative samples furnished for conformance to each of the following requirements:

• Selection of samples for testing	As per ASTM C390 OR BS:2972 (Frequency of sampling clause IV). Unless otherwise stated, the test specimens shall be conditioned without external stress at 23±1°C and 50±2 percent relative humidity for a minimum of 24 hours before testing.	
• Density	40 to 64 kg/m^3 To be tested as per ASTM C303 for Block-type and ASTM C302 for pipe covering.	
• Thermal Conductivity	Mean Temp. °C	Thermal Conductivity (Maximum) mW/cm deg
	10	0.238
	24	0.245
	38	0.252
	Thermal conductivity test shall be as per IS:3346 or ASTM C177. Specimen thickness shall be as per IS:3346 or 25mm per ASTM C177.	
• Comp. Strength (Min.)	After drying at 102°C - 120°C for constant mass as per ASTM C165, at 10% deformation or at yield point, whichever occurs first, shall be 205 KPa. Test shall be as per IS:11239 part X.	
• Water-vapour permeability (max)	8.5 & 5.5 ng/(Pa.s.h) for PIR & PUR respectively Test shall be as per BS5608 or IS12436	
• Fire properties	Insulation shall be self extinguishing type and shall satisfy the requirements for maximum extent of burn (less than 25mm for PIR and 125mm for PUR) when tested as per BS:5608 (Horizontal burning characteristics- max. extent of burn) or IS:12436	
• Flexural Strength	This is applicable to preformed pipe coverings only and shall be 275Kpa(min).Test shall be as per ASTM C446.	
• Humid aging	(Max. allowable value after aging at 60°C – 90 to 100% relative humidity)-Maximum percent change in linear dimension shall be 4. This limit applies to each of the three foam direction. Test shall be as per ASTM D2126.	
• Closed cell content	Minimum percent 85. Test as per BS:4370 Part – II (Test for closed cell content)	
• Dimension stability after heating	Test method as per IS:11239 Part – II The max. dimensional change at different temperatures shall be.. 100°C ± 2°C (24 hr) 2% 125°C ± 2°C (24 hr) 2%	
• Standard size and dimensions	Block	
	Length	upto 2400mm
	Width	upto 1200mm

	Tolerance	On length ±6mm On width ±3mm On thickness ±1.6mm
	Pipe Insulation	
	Length	750 to 1000mm
	Inside diameter	To suit standard steel pipe
	Shall be supplied as cylindrical shape slit in half lengthwise or as curved segments cut from blocks or moulded segments cut from blocks or moulded to shape. Upto 14" size, only pipe sections slit in half lengthwise shall be used.	
	Dimensional Tolerance:	
	Length	± 6mm
	Thickness	± 1.6mm
• Thickness	20, 25, 30, 40, 50, 60 and 75mm	

4 Cellular Glass

Cellular Glass formed and fused into unicellular form can be used upto a temperature of 350°C. Insulation shall conform to the requirements of respective codes, unless otherwise specified herein and shall be tested and test certificates on representative samples furnished as per ASTM C552.

• Density	110 to 147 kg/m^3. Test as per ASTM C303 except that no drying will be necessary. Determine the no. of specimens as per ASTM C390.	
• Thermal conductivity (max)	Mean Temp°C	W/m.k
	149	0.078
	93	0.063
	38	0.052
	24	0.050
	10	0.048
	Thermal conductivity shall be tested as per ASTM C240, C177 and C518. Test at least 3 specimens.	
• Compressive Strength (Average min)	517 kPa Test as per method ASTM C240 and recommended Practice ASTM C165. Test at least four specimens.	

3.2.3 High Temperature Insulation Materials (Above 550°C)

Following types of insulations may be used for high temp insulation applications.

1 Ceramic Fibre

Ceramic Fibre shall be composed principally of Alumina silica fibre blanket. It should be used in the temperature range of 551°C to 760°C. Ceramic fibre blankets shall be made out of fibres having fibre length of about 10 cm or more. It shall normally be of 610 mm width, 13mm or 25mm thickness. Unless otherwise specified insulation shall conform to the requirements of ASTM C892 Type III, Grade 8 or to the specifications described in the table below. Insulation shall be tested and test certificates on representative samples furnished. Ceramic fibre blankets shall be sampled for the purpose of test in accordance with ASTM C390.

SL No	Chemical & Physical characteristics of Ceramic Fibre Blankets	Test Method
•	Chemical composition(By volume%)	

	Al_2O_3(Min)	43	IS 1335
	ZrO_2(Min)	-	IS-10085
	Fe_2O_2(Max)	0.1	IS-1527
	TiO_2(Max)	0.3	IS1527
	SiO_2(Max)	57	-
•	Mean Fibre Dia (Microns)		
	(Upto 3% Standard deviation)	2.5-3.5	BS-2972
•	Dimensional Tolerance		
	Thickness	(-) 0% to (+)40%	-
	Width	(-)2% (Excess is permitted)	-
	Length	(-)0% (Excess is permitted)	-
•	Shot Content(% Max)	20	ASTM C-892
•	Bulk Density(Kg/m³ Min)	128	ASTM C-167
•	*Bulk Density Tolerance	(+) 30% & (-)0%	-
•	Thermal Conductivity (Kcal/M/Hr/°C)**Max (Mean Temp)	0.11(600°C)	ASTM C-177/IS-3346
•	Linear Shrinkage(%) (at max temp) for 24hrs	3(1200°C)	ASTM C-356
•	Tensile Strength(Kg/cm²g(min)		
	Longitudinal	0.6	BS 1902 part 6
	Transverse	0.5	

* The density shall be calculated on the basis of actual dimensions and actual weight only, as offered by the manufacturer.

**In case of thermal conductivity, the test certificate from an international laboratory or any laboratory approved by department of Science & Technology could be considered. However, the same shall indicate values for other characteristics of the material. The test certificate shall not be more than 12 months old from the date of offer of material for inspection.

2 Calcium Silicate

For material specifications refer clause 3.2.2(1)

3 Combination Insulation of Ceramic Fibre (Inner layer) & Rockwool (Outer layer)

For material specifications refer clause 3.2.3(1) & 3.2.1

4 Combination Insulation of Cal. Silicate (Inner layer) & Rockwool (Outer layer)

For material specifications refer clause 3.2.2(1) & 3.2.1

3.2.4 Insulation material for Impulse lines

For impulse lines(Austenitic Stainless Steel), insulation material shall be sodium silicate inhibited Ceramic fibre rope insulation of min density 250 Kg/m³, unless otherwise mentioned. Ceramic Fibre rope shall be made up of Ceramic Fibre insulation. It shall comprise of ceramic fibres laid parallel and finally wrapped with stainless steel wire to reinforce the fibres and holding it in position. Other properties of ceramic fibre shall conform to the specifications as described in clause 3.2.3(1)

3.2.5 Additional Tests / Checks for Materials

Additional tests/ checks for density, thickness, shape and size as per the requirements shall be repeated at site at the time of delivery once for each lot. The Contractor shall perform these

tests in the presence of Client/Client's representative on the sample selected at random. In case of nonconformance the tests shall be repeated as per norms and frequency decided at site as per the directions of Site-in-Charge. In case of repeated nonconformance the complete lot of insulation material shall be rejected. Special attention is required for fibrous material as its installed thickness could be reduced due to compaction during transportation & storage and thus affecting performance.

- All the codes mentioned shall be the latest issues.

- Client/Client's representative/EIL shall have right to inspect any or all the tests conducted on insulation material by manufacturer at his shop or any laboratory.

3.2.6 **Quality Assurance Plan (QAP)**

Vendor shall prepare and submit the Quality assurance plan(QAP). The QAP shall include every stage of manufacturing process starting from raw material stage to final stage of manufacturing. The QAP shall also include reference of purchase order number and date, the types of checks, methods of tests followed, frequency of checks, lot size & acceptable criteria with permissible deviations.

3.3 Weather Protection Jacket

3.3.1 Unless otherwise mentioned, aluminium jacketing shall be used as weather protection over insulation except in fire hazardous areas /above 550°C where it should be stainless steel or aluminized steel. For grade piping in offsites jacket material shall be galvanized steel. Galvanized jacketing shall not be used over insulation on or near austenitic stainless steel and/or austenitic nickel steel Piping & Equipment. Aluminium jacketing shall be as per ASTM B209 Alloy 3003 H16 or IS:737 designation 31000 condition H3 for flat sheets and designation 31500/51300 condition H4 for corrugated sheets. For stainless steel cladding, the materials shall be in accordance with ASTM A167 or A240, type 304 or 316. For aluminized steel cladding, the material shall be in accordance with ASTM A463, type2, coating designation T2-100. Galvanized steel shall be as per IS:277/ASTM A526 with 275 gms/m² of coating. Cladding (other than galvanized steel) shall be coated on the side in contact with the insulation with a polycraft moisture barrier consisting of one layer of one mil high density polyethylene film with a protective layer of 40-pound minimum virgin kraft paper. Polykraft moisture barrier shall be heat laminated and applied in factory. As an alternative 3 mil thick Polysurlin is acceptable. Thickness of the jacketing shall be as follows:

1 Fibrous Material (Rock, Glass Wool & Ceramic Fibre)

• Application	Thickness for Aluminium cladding (other than grade piping in offsites - Refer note below)	Thickness for Stainless steel /Aluminized steel cladding
• For shells of vertical storage Tanks & Vessels	0.7lmm (22 SWG) Corrugated; The profile of corrugated sheet shall be 32mm55mm	0.56mm (24 SWG) Corrugated; The profile of corrugated sheet shall be 32mm55mm
• For tank Roofs	1.22mm (18 SWG) Flat	0.91mm (20 SWG) Flat
• For Horton Spheres & Horizontal vessel shell and heads; vertical vessel heads	0.7lmm (22 SWG) Flat	0.56mm (24 SWG) Flat
• For removable covers	1.22mm (18 SWG) Flat	1.22mm (18 SWG) Flat
• For all piping, other than grade piping in offsites	0.7lmm (22 SWG) Flat	0.56mm (24 SWG) Flat

•	**For grade piping in Offsites**	**0.56mm (24 SWG) Galvanized steel (Refer note below)**

Note: For grade piping in offsites the cladding material shall be Galvanized steel.

2 Rigid Material (Calcium Silicate, Moulded Expanded Perlite, Polyisocyanurate, Polyurethane Foam(PUR) Blocks, Cast-in-situ Polyurethane foam and Cellular Glass)

•	**Application**	**Thickness for Aluminum jacket / cladding**	**Thickness for Stainless steel / Aluminized steel jacket/cladding**
•	Piping, Horizontal Vessel head & Tanks Roof	0.56mm(24 SWG) flat	0.46mm(26 SWG) flat
•	Vertical Vessel Shells & vertical portion of storage Tanks.	0.56mm (24 SWG) corrugated. The circular profile of corrugated sheet shall be 32mm55mm	0.46mm (26 SWG) corrugated. The circular profile of corrugated sheet shall be 32mm55mm
•	Removable covers	1.22mm (18 SWG) Flat	1.22mm (18 SWG) Flat

3.4 Ancilliary Materials

3.4.1 Securement Bands / Wires

1 If material is Aluminium, then specification shall be ASTM B209 Alloy 3003 H16 or IS:737 designation 31000 (Old NS3) condition H3; If Stainless Steel, it shall be 18/8.

2 For securing fibrous insulation

A On Piping
Band, 24 SWG thick x 12mm (min) wide, Stainless Steel.

B On Equipments
Band, 24 SWG thick x 20 mm wide, Stainless Steel.

C On Vertical Storage Tanks
Band, Stainless Steel, 25mm wide x 24 SWG thick.

D Horton Sphere
16 SWG SS Wire & Band, Stainless Steel, 25mm wide x 0.8mm (min.) thk.

3 For Securing Rigid Insulation

A On Piping upto 16" OD
Wire, stainless steel, 16 SWG.

B On Piping 18" OD & Larger, Vertical and Horizontal equipments
Band, stainless steel. 20 wide x 24 SWG thick.

4 For Securing Cladding on Insulation (all types)

A For Piping
Band, SS 12mm (min) wide x 24 SWG thick.

B On Equipment
Band, SS 20mm wide x 24 SWG thick

C On Vertical Storage Tanks & Spheres
Band, Stainless Steel, 25mm wide x 24 SWG thick.

3.4.2 **Rivets**

Rivets required for metal jacket securement shall be the expanding Aluminium "POP" blind eye type/ Stainless Steel, 9.5mm long x 5mm diameter.

3.4.3 **Screws**

Screws required for metal jacket securement shall be Stainless Steel/cadmium plated steel self tapping type A No.8 dia x 12mm long to BS 4176 complete with neoprene washers under the head.

3.4.4 **'S.' and 'J' clips**

- Formed from 25mm wide stainless steel banding.

3.4.5 To ensure perfect water proofing, all the cladding joints shall be packed with sealing materials which may either be in the form of a elastomeric sealing compound or fibre based bituminous felt strips.

4.0 APPLICATION

4.1 General

4.1.1 The application methods, given in this Standard are general in nature. The Contractor is responsible for applying an insulating system that will give a satisfactory operational performance and the requirements given herein shall be regarded as the acceptable minimum. The Contractor shall carryout the work in accordance with the best practices of insulation application with the minimum of waste and debris and the final job shall have a neat, efficient and workmanlike appearance.

4.1.2 The insulation shall be so designed/applied such that ingress of water is prevented, leaked product can drain off and vapour can escape.

4.1.3 All hydrostatic tests on piping and equipment, including steam tracing systems, shall be carried out before insulating material is applied.

The insulation Contractor shall only insulate those sections of the plant that have been specifically released for such work by the engineer-in-charge. If insulation must be installed before pressure test, then all welds and flanged joints in the pipe shall be left uncovered till successful completion of pressure test. Then insulation shall be completed.

4.1.4 Surfaces to be insulated shall be thoroughly cleaned, dried and made free from loose scale, oil or grease. It shall be the Contractor's responsibility to remove loosely adhering scale and dirt before applying insulation.

4.1.5 **Corrosion Prevention**

Piping, Equipment, Tanks etc shall be protected against corrosion by painting under insulation as per specifications described below:

Sl. No.	Design Temperature in °C	Surface Preparation & Pre-erection/Shop Primer	Paint system (Field)		Total Final DFT in Microns (min.)	Remarks
			Primer	Finish paint		
1	Insulated carbon steel, LTCS and low allow steel Piping, Storage Tanks, Equipment etc					
A	-45 to 125	SSPC-SP-10; 1coat of F-9 @ 65-75μ DFT/coat	None	2 coats of F-14 @ 125μ DFT/coat; (2x125=250) or 3 coats of F-15 @ 80μ DFT/coat ; (3x80=240)	315-325 or 305-315	No over-coating to be done on F-9 as it will lead to mud cracking.
B	126-400	SSPC-SP-10; 1coat of F-9 @ 65-75μ DFT/coat	None	3 coats of F-12 @ 20μ DFT/coat; (3x20=60) or 1 coat F-16 @ 60 μ DFT/coat	125 – 135	F-12 shall be ambient temperature curing type
2	Insulated stainless steel including Alloy-20 piping (Note:2)					
A	Below 0°C to all minus temperature	Aluminium sheeting with aluminium foil and "Chloride free mineral sealant coating barium chromate" shall be applied.				If the piping & equipments are already erected than surface shall be prepared by cleaning with emery paper and wash/flush with chloride free DM water followed by wiping with organic solvent
B	0 to 125	SSPC-SP-10 (15-25μ surface profile) 1 coat of F-14 @ 125μ DFT/coat	None	1 coats of F-14 @ 125μ DFT/coat;	250	
B1	0 to 125 (alternate)	SSPC-SP-10 (15-25μ surface profile) 1 coat of F-15@ 80μ DFT/coat	None	1 coat of F-15 intermediate coat @ 80μ DFT/coat + 1 coat of F-15 finish coat @ 80μ DFT/ coat; (80+80=160)	240	
C	121 to 400	SSPC-SP-10; 1 coat of F-16@ 125 μ DFT/coat	None	1 coat of F-16@ 125 μ DFT/coat	250	
D	401 to 600	SSPC-SP-10; 1 coat of Amercoat 738 @ 125μ DFT/coat	None	1 coat of Amercoat 738 @ 125μ DFT/coat	250	Only Amercoat 738 is suitable for the temperature of 600 deg.C and cyclic temperature.
E	Cyclic service (-)196 to 480 excepting (-)45 to 120	SSPC-SP-10 1 coat of Amercoat 738 @ 125μ DFT/coat	None	1 coat of Amercoat 738 @ 125μ DFT/coat	250	
3	No painting is required for insulated monel, incoloy and nickel lines.					

Notes

1. The blast cleaning abrasives for SS and Alloy steel surfaces shall be SS grits/shots or Aluminium oxide grits/shots.
2. For SS surfaces with cyclic temperature of -45 to125 deg.C, both A & B(B1) are applicable.

ABBREVIATIONS :

F-9 : Inorganic Zinc Silicate coating
F-12 : Heat resistant Silicone Aluminium paint
F-14 : Specially formulated polyamine cured coal for Epoxy coating
F-15 : Epoxy phenolic coating
F-16 : Engineered Polysiloxane coating

4.1.6 The insulation contractor shall not carryout any welding or drilling on plant equipment and piping.

4.1.7 Insulation shall be finished, bevelled and weatherproofed at all terminal points where it is required to remove bolts etc. without damage to the insulation.

4.1.8 Equipment nameplates shall remain visible after insulation has been applied by bevelling back the insulating material and carefully sealing the exposed edges to prevent ingress of moisture.

4.1.9 All projections, such as lifting lugs, trunnions and stiffeners on piping and equipment (i.e. vacuum rings) shall be insulated with the same thickness of insulation as specified for the equipment item or pipeline.

4.1.10 Thermowell bosses, pressure tappings and weephole nipples shall not be insulated in but left accessible.

4.1.11 For Insulation thicknesses upto 75mm only single layer insulation shall be used. Multi-layer insulation shall be required when the insulation thickness is greater than 75mm with the inner layer being larger. Insulation installed in two or more layers shall be staggered joint construction and each layer shall be secured in place and details of securement shall be the same for each layer.

4.1.12 Wet or Damaged Insulation shall not be used under any circumstances

Material awaiting its protective cover shall be adequately protected from damage, rain and contamination and shall be covered with cladding at a minimum loss of time.

4.1.13 A minimum clearance of 25mm between outside surface of any insulation finish and adjacent equipment, pipe or structural members shall be maintained.

4.1.14 Insulation supports shall not project out of the insulation outer surface and shall be given sufficient coverage of insulating material to avoid hot spots on the metallic cover at support positions.

4.1.15 Where insulated horizontal piping is supported on steel shoes, the height of the shoe shall be such that the underside of the insulation finishing material is clear of the supporting structure upon which the shoe rests by 25mm minimum.

4.1.16 Pieces of insulation with crushed and damaged ends shall not be used.

4.2 Piping

4.2.1 **Standard Shapes of insulation**

1 Fibrous Material (Rock or Glasswool)

Shall be preformed pipe section in 2 halves for sizes upto which manufactured and at least for all pipes with outside diameter over insulation of 500mm. In bigger sizes, multi-segments are preferable if manufactured, otherwise, blankets are acceptable.

2 Calcium Silicate / Moulded Expanded Perlite

Hollow cylindrical shapes slit in half lengthwise (in a plane including the cylindrical axis) or as curved segments. Upto 14" pipe size, only hollow cylindrical shapes slit in half lengthwise shall be used. Pipe sections bored / machined out of blocks shall not be used.

3 Polyisocyanurate / Polyurethane

Shall be supplied as cylindrical shape slit in half lengthwise (in a plane including the cylindrical axis) or as curved segments cut from blocks or moulded to shape. Upto 14" pipe size, only pipe sections slit in half lengthwise shall be used.

4 Cellular Glass

Shall be supplied as cylindrical shape slit in half lengthwise (in a plane including the cylindrical axis) or as segments. Upto 14" pipe size, only pipe sections shall be used.

5 Ceramic Fibre

Shall be supplied in blanket strips in sizes as mentioned in the material spec in clause 3.2.3.

4.2.2 **Application**

1 Horizontal Pipe

A General

Insulation material shall be applied to fit snugly against the contours and shaped only where necessary to achieve this requirement. The insulation shall be carried out with the least number of material pieces as possible and all unavoidable gaps, cavities, and voids suitably filled up compatible loose fill material.

B Pipe Section / Moulded Blocks / Segments

- End joints of adjacent blocks shall be staggered one half of the length of the block.
- Included angle between segments shall not be less than 30 deg. for both single and double layer insulation.
- Further, minimum arc length of segments should meet following staggering requirements.

When double layer is applied, both longitudinal and circumferential joints shall be staggered. The arc between the longitudinal seam lines of the inside and outside layers of insulation shall have an angle of over 15 deg. or the longitudinal joints staggered at least by one layer thickness, whichever is more stringent. Circumferential seams of the inside and outside layers shall be at least 100mm apart.

C Blankets (Fibrous insulation - Rock or Glasswool)
Shall be applied over the surface with joints tightly butted and laced together with 1mm diameter galvanized lacing wire.

D Insulation Securement (All insulation materials)

Each layer of insulation shall be secured firmly in place with at least 3 loops of binding wire / band, one loop to be placed not more than 75 from each end and at least one loop to be equally spaced between end loops, for each section. Binding wire shall be drawn about the insulation with ends tightly twisted

together, bent under & pressed into the surface of insulation. Bands or wires in no case be spaced more than 200mm apart.

- For calcium silicate & Moulded expanded perlite, all joints shall be sealed with insulating cement of same composition as the Moulded block.

- For Cellular glass, Polyurethane foam and polyisocyanurate, joints shall be sealed with suitable compatible material.

- Each layer of insulation shall be secured by the same method as above.

E Frame work for supporting cladding fibrous insulation (See Fig: 3 and 4)

This is not necessary for rigid materials. This is required only for horizontal pipe runs provided with fibrous insulation, in blanket forms; vertical piping provided with fibrous materials need not be provided with this. Piping provided with fibrous resin bonded pipe sections also need not be provided with this framework.

Spacer rings shall be fabricated out of 25x3 M.S. Flats. The outside diameter of these rings shall be equivalent to the outside diameter of the insulation. Spacer rings shall be riveted to 'Z' shaped stays fabricated from the same sized M.S. Flats. These rings shall be suitably painted for corrosion protection. Stays shall be provided at intervals of not more than 300 along the circumference of the insulation, subject to a minimum of 3 stays. Spacer rings shall be provided at every approx. 900. To minimize direct heat conduction through the stays, a packing of 2 sheets of 3 thick mill board shall be provided at the joints of the stays and pipes. Joints between M.S. Spacer Ring and stays shall be riveted by 6 dia M.S. Rivets with 2 Sheets of 3 thick mill board interposed.

2 Vertical Pipe (All insulation materials) (See Fig.5).

Insulation on vertical or near vertical piping (i.e. greater than 45 deg. angle from horizontal) shall be supported by bolted on metal collars. Metal collars shall be of 6 thick M.S. or Alloy Steel bar (to suit piping material).

Outside diameter of collar shall be around 12 less than O.D. of insulation. Where multi-layer insulation is used, support collar shall be extended to provide for each layer.

Support positions shall be at no greater distance apart than the following:

Pipe operating Temp.(^{o}C)	Support Spacing
Upto 400	4500mm
401 to 500	3500mm
501 to 550	2500mm
551 to 650	2000mm
651 to 760	1500mm

3 Expansion Joints (Both vertical and horizontal piping. All insulation Materials) (See Fig.5)

Expansion joint shall be provided at regular intervals as below:

Temp (^{O}C)	Spacing (m)
Upto 200	Not required
201 to 300	10
301 to 350	8
351 to 400	6
401 to 550	5
551 to 650	4
651 to 760	3

Expansion joint shall be formed by a 25mm space between the pipe insulation sections and the space shall be filled by compressed mineral rock fibres. Expansion joints in each layer shall be offset at least 150 from each other in case of multi layer insulation. Expansion joint for first layer for vertical pipe shall preferably be just below insulation support collars.

4 Elbows and Bends (All insulation materials) (See Fig.6 and Fig.7)

Insulation material shall be mitred and shall be same as that of pipe. Insulation securement bands/wire shall be same as that for equivalent dia pipe. Each mitred section shall be secured with minimum 2 wires/bands. For bends / elbows of nom. pipe size 6" & below, due to lack of space, for all insulation materials, insulation shall be secured by spirally wound 16 SWG SS wire for hard materials & 10 SWG SS wire for soft materials. Insulation joints of block material shall be suitably sealed with adhesive for isocyanurate /PUR/cellular glass and by insulating cement for calcium silicate/Moulded expanded perlite. Fittings below 50mm nom. dia, if insulated of calcium silicate/Moulded expanded perlite, shall be insulated with insulating cement build up in 6mm layers to the thickness of insulation of the adjacent piping. Each layer of insulation cement shall be reinforced with 25mm No. 20 SWG wire netting.

5 Tee (All Insulation Materials) (See Fig.8)

Preformed pipe sections or segments shall be carefully cut and shaped around "Tee,' junctions and the insulation material of the tangential pipe shall be carefully and neatly cut to mate upto the material applied to the parent pipe without the creation of voids or gaps, at the junction. Insulation shall be adequately secured by wire / bands of same specification as that of same size pipe.

6 Flanged Joints or Valves (all insulation materials (Fig.9 and 10)

Flanged Joints or Valves, if to be insulated, shall be insulated with prefabricated removable covers, lined with pipe sections / lags / slabs.

Welded valves, if insulated, shall be insulated with oversized pipe sections or lags, cut and shaped to fit around the body of the valve. Insulated valves shall be completely covered, but the insulation shall be cut and shaped around the valve stem and kept clear of the stuffing box gland.

7 Insulation Flashing (all insulation materials)

Insulation shall be stopped short of flanged joints and unions by a sufficient distance to permit easy removal of the flange nuts and bolts or breaking of the unions to take place without disturbance or damage to the insulating material. At these positions the insulation shall be beveled and sealed with a metal closure which in turn shall be sealed with waterproof sealing material.

8 Pipe Supports: (All insulation materials) (Fig.11)

Insulation at solid welded or clamped supports shall be cut and shaped to fit around the support and banded securely to enable the insulation to be carried with the pipe movement. When the pipe hangers pass through insulation on piping outdoors, metal hoods packed with a waterproof sealing material shall be furnished and installed. Upper bolts of the hanger clamps are not to be covered with insulation.

9 Steam Traced Piping (All insulation materials) (Fig.12)

Steam traced piping and fittings shall be installed with oversized sections to allow accommodation of both parent pipe and tracer without damage or deformation of the insulation. Traced instrument line and fittings shall be totally enclosed by the insulation in a similar manner and the designed warm air annulus maintained throughout the tracer pipe length. Insulation supports for vertical pipe shall have suitable clearance for tracer pipe. Composite box type insulation may be provided on the steam supply lead lines, in case they are routed together similarly this may be provided for the return lines to manifolds after the run of tracers.

10 Electrical Traced Piping (Polyisocyanurate / PUR)

Electrical traced piping shall be provided with the same size insulation as would be provided if the piping were not electrically traced, unless otherwise specified.

4.3 Horizontal Equipments

4.3.1 Standard Shapes of insulation

1 Fibrous Material (Rock or Glasswool)

Shells: Preferably preformed pipe or multi pipe segments or slabs cut and shaped to fit. Alternately, blanket may be accepted.

Heads: Preformed blocks and slabs cut and shaped to fit. Alternatively blanket may be accepted.

2 Calcium Silicate/ Perlite/ PUR/ Polyisocyanurate/ Cellular Glass

Curved segments / blocks, mitre cut and shaped to fit.

3 Ceramic Fibre

Shall be supplied in blanket strips in sizes as mentioned in the material spec in clause 3.2.3.

4.3.2 Application (All Materials)

1 Following provided by the vessel fabricator for insulator / cladding support / securement, as indicated in enclosed sketch No. 7-12-0033, shall be verified for their presence by the insulation contractor, before commencing insulation work:

- For vessels of diameter 2000mm and above are provided insulation support at horizontal centre line as also vertically at tangent lines. Ring support at tangent lines are provided with 6mm diameter holes. These are to be used for insulation securement.

- At vessel heads above 600mm outside diameter are provided flats having 6mm dia holes. The flats are for insulation support and holes provided in them are to be used for insulation securement. Also provided on either head is a central ring made of 10 dia galvanized steel rod. For vessels which do not have central nozzle, these rings shall not be provided by vessel fabricator. For such vessels, insulation contractor shall provide these rings.

- Boot of vessel, if any, is provided with circular support ring with holes, as indicated in sketch.

2 Blanket shall be applied over the surface with joints tightly butted and laced together with 1mm dia galvanized lacing wire.

Other block insulation shall be applied with the longer dimension parallel to the axis of the vessel or equipment. When blocks are applied in multiple layers, all joints in successive layers shall be parallel to the long axis, shall be staggered and sealed with insulating cement for calcium silicate or suitable adhesive for others. In all cases, the insulation is to fit the contour of the vessel or equipment, so that the use of a leveling coat of insulating cement should not be normally necessary to get an acceptable smooth exterior.

3 Special considerations for insulating high temperature Vessels (Required only if provided with calcium silicate insulation) (Fig. 15)

This provision is required to take care of the effects of equipment circumferential thermal expansion on insulation.

This provision is required only for vessels and Exchangers provided with calcium silicate insulation.

Calcium silicate insulation should be installed in bevelled or curved segments only, to avoid voids and provide an efficient insulation system.

For equipments upto 3000mm in diameter and 200°C, to take care of equipment circumferential expansion, the circumferential block is cut and fitted to be 13mm greater in circumference than the equipment and secured so that tension of the bands produces compression on the butt edges rather than on the surface towards the vessel; the little annular space and the compressiveness of the blocks would suffice to take care of circumferential expansion of equipment.

If the vessel is above 3000mm in diameter or if temperature is above 200°C or both, a 25mm thick Rockwool fibre blanket insulation shall be applied around the equipment prior to the application of calcium silicate. This acts as an expansion area around the equipment to act as mechanical and sometimes thermal cushions. The calcium silicate block must be cut and fitted to the outside radius of the equipment plus the thickness of the Rockwool spacer insulation. The insulation, when installed, should not compress the fibrous blanket.

Above provision to take care of circumferential expansion is required both for shell and head.

4.3.3 Insulation Securement (for all insulation materials) (Refer Fig.13 and 14)

Each layer of insulation on shells of equipment shall be secured by bands at every 225 centres. Each band shall be machine stretched and tensioned to remove slack only.

Each layer of insulation on vessel heads shall be secured as follows:

Band shall be in radial direction connecting the head central floating ring and shell girth ring. The radial bands shall be placed at not more than 150 centres for rigid and 300 for fibrous insulation, measured at the girth ring. These bands shall be machine stretched and sealed. Outermost layer of insulation shall also be supported by drawing and securing 16 SWG annealed wire through the 6 diameter holes provided in the shell girth ring as also the flats provided on heads. The wire shall be drawn through every hole and it shall be secured to the ring with a knot.

4.4 Vertical Equipments

4.4.1 Standard Shapes

Shapes for different materials shall be same as specified for horizontal equipment.

4.4.2 Application (For all insulation materials) (Fig 16 & 17)

Application details on shell, top and bottom heads shall be similar to that of horizontal equipment. Insulation shall be laid on insulation support rings provided by the fabricator. See Standard 7-12-0025.

4.4.3 Insulation Securement (For all insulation materials) Fig. 16, 17 & 18)

Bottom and Top Head insulation shall be supported by 16 SWG SS wire drawn through holes in the insulation supports provided by the fabricator.

Top head insulation shall be secured by floating ring/bands provided by vessel fabricator similar to head of horizontal vessel.

Shell insulation shall be supported by bands at every 225 centres on the cylindrical portion and the bands shall be kept horizontal.

Insulation Securement for Bottom head for vessel supported on legs shall be identical to that of Top head.

For insulation securement of bottom heads inside skirt no floating rings/bands need be provided; Firm securement should be ensured just by 16 SWG annealed SS wire drawn over insulation tightly and through the holes on support rings provided by the fabricator.

4.4.4 Expansion Joints (All insulation materials)

Expansion joints shall be provided every 4000mm (max.). The joint shall be provided at insulation support rings. It shall be a 25mm space between the top of the insulation and the bottom of the support ring. The space shall be filled up by compressed rockwool fibre.

4.5 Flange, Nozzle, Channel Cover, Manway & Handhole Flanged Cover (For All Insulation Materials)

Where insulation is required, these shall be insulated with lined removable prefabricated covers secured with bands or quick release toggle clips.

Otherwise, insulation shall be stopped short of uninsulated flanges and nozzles etc., a sufficient distance to permit withdrawal of bolts without disturbing the insulation. Insulation shall be weatherproofed and sealed at these locations.

4.6 Irregular Surfaces Such as Pumps, Compressors, Turbines etc.

4.6.1 Application

1 Fibrous Material: Material, application and insulation securement

This shall be Prefabricated removable covers, lined with pipe sections / lags / slabs / mattresses.

2 Calcium silicate/Moulded Expanded Perlite

Insulation material shall be loose fill insulating cement/block insulation cut and fitted.

Insulation shall be applied in maximum 25mm thick layers until the scheduled thickness is obtained.

Each layer shall be covered with a layer of 25mm hex. 20 SWG galvanised iron wire mesh for other than SS surfaces and with SS wire mesh for SS surfaces. The final layers shall be trovelled to a smooth finish with a 6mm thick finishing cement.

Insulation shall be beveled back at 45 deg. from all casing flanges, shaft seal caps and bearing boxes.

4.7 Vertical Storage Tanks (Carbon Steel)

4.7.1 Standard Shapes of insulation

1 Fibrous Material (Rock or Glasswool)

Shall be in slab form..

2 Polyisocyanurate / Polyurethane foam

Shall only be foamed cast in-situ.

4.7.2 Application

1 Supporting rings / spikes (rods) for supporting insulation / cladding

A Shell

Refer Standard 7-13-0003 Sh.1&2 of 2. This Standard indicates the extent of insulation / cladding supporting / securement details provided by tank fabricator. Insulation contractor shall check for its presence before insulation application work. Following is provided by tank fabricator :

Water Shed

At the junction of shell and roof, a watershed is provided to act as top covering for the shell insulation as shown in Std. 7-13-0003.

Insulation Support

Insulation support will consist of 5mm dia steel rods provided at 400mm dia diamond pitch. Length of these lugs is 3mm less than insulation thickness.

Cladding Support

From tank top, horizontal rings shall be provided at every 1175mm on tank shell.

B Tank Roof

Shall be provided as per Standard 7-13-0003.

2 Insulation laying and securement

A Shell (Application of fibrous insulation)

Insulation shall be applied between rings in horizontal mode. Mattresses insulation shall be applied with joints tightly butted and laced together with 1mm dia. galvanized lacing wire. Matts shall be impaled to the 5mm rod and speed washers fixed and pressed home for intimate contact of the insulation. In the case of multiple layers, speed washers are necessary only over the final layers, (upto and including 150mms). Rods and speed washers of spring steel should be selected to suit each other. While rods are provided by tank fabricator, speed washers shall be furnished by insulation contractor. Insulation shall be further secured by bands spaced centrally between insulation supports.

Shell (Application of Polyisocyanurate / Polyurethane foam)

Shall be foamed cast in-situ as per vendor's procedure (approved by EIL/Client/Client's representative) and to the satisfaction of Site-in-Charge. The minimum requirement for thermal conductivity, density, compressive strength, fire properties and water vapour permeability shall be as per para 3.2.2(3). Depending upon the application the thickness of cladding and bands shall be as per para 3.3 & 3.4 respectively. Contractor shall ensure that cladding & band thicknesses are capable of withstanding foaming pressures which are developed at the time of injection of foam. Contractor can use foamed cast in-situ insulation only after getting the approval to material specification and application procedure.

B Roof (For all materials)

Application of both fibrous, polyisocyanurate and Polyurethane foam shall be similar to that as for shell. Insulation support from 5mm dia M.S. lugs shall be exactly same as in shell.

4.8 Horton Spheres

4.8.1 Standard shapes & Material

Shall be only Rockwool / Glass wool blanket.

4.8.2 Application

1 Structural members provided by spheres fabricator for insulation/cladding securement.

Insulation & Cladding supports shall be as per Standard 7-13-0015.

2 Insulation laying and securement

Insulation shall be applied between rings. Insulation shall be applied with joints tightly butted and laced together with 1mm dia galvanized lacing wire.

Insulation shall be secured by drawing and securing tightly 16 SWG stainless steel wire through the 6 dia holes, provided every 200 centres, in the horizontal leg of the insulation support angle ring. The wire shall be rightly drawn over the insulation and the insulation firmly secured. The wire shall be drawn through every single individual hole and it shall be secured with angle with a knot at every fourth hole. For application of bands for securement of insulation and cladding refer figure20.

4.9 Inspection Windows

4.9.1 Piping

Plug type inspection windows of ellipsoidal shape shall be provided on all the insulated pipelines having diameter 2" and above. One inspection window shall be provided at a distance of every 20meters of straight length of pipe. It should be provided at the bottom i.e. At 4-6-8 clock position whichever is convenient. There must be atleast one inspection window between two bends which are minimum 10 meters apart. Atleast 50% of the bends shall be provided with inspection windows. The sheet metal of the inspection windows shall be of same thickness as that of the sheet metal cladding on insulation. The size of the inspection windows shall be as follows:

Pipe dia 2"	35mm minor diameter x 120mm major diameter
Pipe dia 3"	45mm minor diameter x 120mm major diameter
Pipe dia 4"	75mm minor diameter x 120mm major diameter
Pipe dia 6"	100mm minor diameter x 120mm major diameter
Pipe dia 8"	100mm minor diameter x 120mm major diameter
Pipe dia > 8"	120mm minor diameter x 120mm major diameter

4.9.2 Exchangers

All the heads shall be provided with one inspection window each. Minimum two inspection windows shall be provided on the shell side.

4.9.3 Columns & Vessels

Heads shall be provided with one inspection window each. One inspection window shall be provided at every platform. Minimum two inspection windows shall be provided on shell portion.

4.9.4 Tanks

One inspection window shall be provided at each course of the tank and also at the top.

4.10 Impulse Lines

Wrap the impulse lines with insulation (Sodium Silicate inhibited Ceramic rope) of required thickness (refer note below) after cleaning the impulse lines of dust, rust, grease etc. Ensure that the rope(s) have been tightly wrapped without leaving any gaps. Apply two layers of self adhesive Aluminium foil tape of minimum 0.1 mm thick spirally bound over the fibre rope surface with the joints in two layers staggered. Ceramic rope shall have minimum density of 250 Kg/m³ with other properties conforming to para 3.2.3(1) of the specification for Hot Insulation. A suitable sealant shall be provided to stop the water ingress at the termination points of insulation.

Note: Impulse line insulation details shall be as follows:

Size (Impulse line)	Temp	No. of Ins layers	Thickness of each layer
½"	150degC	2	½"
¾"	150degC	2	½"
½"	250degC	2	¾"
¾"	250degC	2	¾"

5.0 INSULATION FINISH

5.1 General

5.1.1 Moisture Barrier

1 On all surfaces except horton sphere, provided with fibrous materials, Moulded Expanded Perlite , Calcium silicate, Polyisocyanurate & Polyurethane foam .

For surfaces upto 125°C & on PIR/PUR in case of electric heat tracing apply a breathing type moisture barrier as below. A 3mm thick coating of mastic shall be applied to the surface of the insulation as soon as possible, after erection, to reduce the time the insulation is exposed to the weather, to a minimum. Whilst this coat is still wet, glass cloth shall be laid over the surface and embedded in the mastic. Care shall be taken to ensure that the glass cloth is laid smooth and free from wrinkles and that no pockets of air are trapped beneath the surface. At junctions in the glass cloth, the overlap shall not be less than 75mm. A second 3mm thick coat of mastic shall be applied after approximately 12 hrs. When dry this coating shall be a minimum of 1.50mm thick. Care must be taken, however, to ensure that the individual coats are not greater than 3mm (especially corners) otherwise some cracking of dried coat may result. The mastic shall not be applied over wet insulation or until the adhesive is dry. During the drying time, the insulation shall be protected from the weather by "Alkathene" film type tarpaulin or similar materials approved by Engineer-in-Charge. **Mastic vapour barrier quality shall be Ar-cryl CP-9 of Childers or equivalent.**

5.1.2 Insulation Finish

The insulation finish shall provide a weatherproofed and covering over the whole of the insulated areas and be applied and fitted in such a manner as to provide a close fitting assembly without gaps.

5.2 Piping (For All Materials)

5.2.1 Straight pipe shall have metal jacketing cut and machine rolled, (approx. 1metre long) wrapped around, with 50mm minimum overlaps on both longitudinal and circumferential overlaps. All laps shall be arranged to shed water.

5.2.2 A single bead shall be made on all overlaps to ensure tight metal to metal water tight arrangement. Selftapping screws, at every 150, shall be provided at all longitudinal overlaps for both horizontal & vertical piping.

5.2.3 At all operating temperatures the seams at overlap positions shall be rendered watertight per clause 3.4.5 to ensure that insulation remains dry and unwetted, whether the possible water impingement is from rain, hose or fire sprinklers.

5.2.4 The metal coverings shall be secured tightly around the insulated pipe and held in place with hands on a maximum of 300mm centres. One band shall be located on each circumferential lap and the distance between laps divided at equal band spacings. The band securing seals shall be kept neatly in line and positioned away from viewing angles as much as is possible.

5.2.5 Vertical overlaps on vertical or near vertical piping shall be staggered to provide overlaps at 'North,' and 'South' positions in alternate sections of covering.

5.2.6 Each sections of metal covering on vertical piping with insulation OD's larger than 250mm shall be supported from the next lower section with two 'S' clips, fabricated from banding material. The 'S' clip shall be of sufficient length to allow the minimum overlap of 50mm.

5.2.7 On vertical piping with OD's of 600mm and larger, the securing bands shall be supported by 'J' clips, fabricated from banding material. The 'J' clip spacing shall be a minimum of two per band. All 'J' clips shall be screwed into position and secured.

5.2.8 Insulated bends and elbows in piping 80mm and larger, shall be metalled with 'lobster back' segments using 10mm minimum ball swage to assist shaping. The metal bands shall be screwed with selftapping screws and metal sealants are to be provided to get a completely waterproofed arrangement.

5.2.9 Insulated bends and elbows in piping smaller than 80 mm may use complete pressed and humped back flat metal elbows or fabricated 'stove pipe' elbows.

5.2.10 The practice of locating all joints in the top portion of elevated horizontal pipes for the sake of good appearance when looking up from grade shall be strongly discouraged. The joints shall be located to shed water.

5.3 Equipments (For All Materials)

5.3.1 The metal jacket over vertical vessel shells shall be constructed of sheet metal panels with the weight of the panel taken on the equipment insulation support rings, via angle brackets bolted to the panel. Refer standard 7-12-0025 for details.

5.3.2 The panels shall be applied commencing at the bottom of the vessel. Each circumferential ring of panels shall be tensioned by means of tensioning bands until the final joint is screwed tight. 'S' clips shall be used as sheeting support at unscrewed circumferential overlaps.

5.3.3 The panels shall be held tight over the vessel insulation by means of circumferential bands and sealed per 3.4.5. The bands shall be positioned on all horizontal overlaps and at 450mm centres. Bands shall be held in their relative positions with 'J' clips and be machine-stretched and sealed to remove slack only. Those bands which are not supported by 'J' clips, shall be held in position on cladding by providing pop rivets every 2 metre centres.

5.3.4 The panels shall have a minimum overlap of one corrugation on vertical joints and 80mm on horizontal joints. The overlaps shall be arranged to shed water at all times.

5.3.5 The vertical and horizontal overlaps shall be secured with self tapping screws at 150mm pitch except the horizontal overlaps pre-selected to act as expansion joints, these shall be constructed with a 150mm overlap and shall remain unscrewed and left free to permit expansion. All overlaps shall be rendered watertight as per 3.4.5.

5.3.6 All equipment projections such as nozzles, shall have the jacketing sealed using a metal flashing, cut to fit the projection and extending above the jacket at least 80mm. The seal between the flashing and jacket shall be made watertight by use of self-tapping screws and sealing mastic.

5.3.7 Horizontal cylindrical equipment shall be furnished with flat metal jacket arranged in circumferential bands with the edge of the sheets, with the longer dimension applied around the circumference of the equipment insulation.

5.3.8 The panels shall have a minimum of 80mm overlap of both longitudinal and circumferential edges, both overlaps being finished with a simple ball swage and rendered watertight as detailed in clause 3.4.5.

5.3.9 Horizontal overlaps shall be secured with No. 8x12mm long self-tapping screws set in the overlap at 150mm intervals, and shall be so arranged that staggered bands of panelling encircle the equipment. Vertical overlaps shall not be screwed for horizontal equipment.

5.3.10 The metal finish shall be banded and sealed at 450mm centres.

5.3.11 The insulated heads of vertical and horizontal equipment shall be fabricated from flat metal, an "Orange peel" construction with all radial seams overlapping aminimum of 50mm and secured with self-tapping screws at 150mm centres. All overlaps shall be ball swaged and be rendered water tight per 3.4.5.

5.3.12 Projections from the heads shall be sealed using metal flashings, neatly cut to fit around the projections and extending above the jacket for a minimum of 80mm. The seal between flashing and jacket shall be weatherproofed with self-tapping screws and mastics.

5.3.13 Insulation at bottom heads of fully skirted equipments does not require weatherproofing.

5.3.14 Heads of equipments 24" OD and smaller shall be finished and waterproofed with square ended fabricated covers.

5.4 Vertical Storage Tanks

5.4.1 Cladding Applications and Securement

1 Shell (Fig. 19 and Standard 7-13-0003. Sh.1 and 2 of 2)

Cladding is applied over the system of horizontal rings as follows :

- Overlaps in the vertical joints will be one corrugation.
- Overlaps in the horizontal joints shall be 50mm (min.).
- Cladding to cladding fastening, at both horizontal and vertical overlaps shall be alternately by "POP" Rivets & selftapping screws at 150mm pitch.
- Cladding shall be secured to support ring by bolting. Bolts are provided by tank fabricator at 300mm centres on angles provided at every 1175 centres vertically. Cladding is secured as indicated in standard 7-13-0003. Felt washer, aluminium washer and nut shall be supplied by insulation contractor for all bolted connections at shell, roof and curb angle.
- Insulation shall be tucked into the skirt portion of the curb angle. Shell cladding and extended roof cladding shall be secured to curb angle by bolting as per standard 7-13-0003, every 1500.

- Horizontal stainless steel bands over-cladding to be provided every 800mm and also to coincide at every horizontal cladding overlaps. Bands shall be tightened, locked and lock fastened featuring stainless steel fastening systems. In order to prevent sliding of the bands downwards, the bands shall be secured to the cladding using POP rivets at horizontal pitch not over 2 metres .

2 Roof

- All cladding joints shall be sealed by elastomeric metal sealants.
- Min. 75mm overlap shall be ensured at all joints.
- At all joints, cladding-to-cladding securement shall be provided by self tapping screws and pop rivets alternately, every 150 centres.
- Cladding shall be secured by bolting at every 300 provided by tank fabricator. For details of cladding arrangement and bolting, see standard 7-13-0003.

5.5 Horton Sphere

5.5.1 Cladding Support

Insulation contractor shall provide 25mm x 0.8mm S.S. Bands over insulation and install them longitudinally from top to bottom of the sphere in such numbers so as to afford a maximum spacing of 1175mm at the equator. The S.S. Bands are spanned between four floating rings, the one at the top and bottom of the sphere are provided by the sphere fabricator. Generally the other two rings and SS bands are provided after insulation is applied prior to application of cladding. Floating rings will be constructed of 10mm diameter rods of S.S.. Diameter of ring at the top and bottom, to be provided by sphere fabricator would be around 1.2m. Cladding support bands shall be tightened using mechanical tightners and fastened to MS / AS angles using two S.S.Rivets or four Nos. of Aluminium POP rivets, per angle cleat.

5.5.2 Cladding Application

While applying cladding, following shall be ensured

-Minimum overlap both horizontal and vertical shall be 50mm.

5.5.3 Cladding Securement and Scaling of Joints

All joints to be sealed using elastomeric metal sealant.

Cladding to cladding securement of both vertical and horizontal overlaps shall be alternately by POP rivets and self-tapping screws, at every 150mm spacing.

Cladding shall be secured to the insulation angle support by bolting the cladding on the bolts provided at every 300 pitch at every angle support per standard 7-13-0015. Mmill-board washer, aluminium washer and nut shall be supplied by insulation contractor.

Further cladding shall be secured by 25mm x 0.5mm S.S. bands, applied identical to those for insulation securement. The bands shall be provided between two floating rings, one at the top and one at the bottom and arrangement & details shall be identical to that of insulation securement. Bands shall be secured to cladding every 2M by one SS or two aluminium POP rivets. While providing floating rings, for both insulation and cladding securement, following points shall be taken care of:

-Floating rings shall clear nozzles / manholes etc.

-Exercise extreme care while installing floating rings regarding cut outs in cladding around projections,

-Cladding at interface between leg and the body of the sphere to be provided with care and suitably sealed to prevent water ingress.

6.0 GAURANTEE & TEST CERTIFICATES

Insulation contractor shall guarantee all insulation works against the defects due to material and workmanship effecting performance for a period of eighteen months from the date of completion of total insulation works and shall repair /replace promptly, without cost, any part or parts of the material that fails within said period.

All the test certificates required as per this document shall also be furnished alongwith the supply of materials.

7.0 REFERENCE CODES AND STANDARDS

The following list includes standards and specifications referenced in Spec. 6-44-0002 :

ASTM Standards and Specifications

ASTM A167	Specification for stainless and heat-resisting chromium nickel steel plate, sheet and strip
ASTM A240	Specification for heat-resisting chromium and chromium-nickel stainless steel plate, sheet and strip for Pressure Vessels
ASTM A463	Specification for steel sheet, aluminum coated, by hot-dip process
ASTM A526	Specification of steel sheet, zinc coated (galvanized) by the hot-dip process, commercial quality
ASTM B209	Aluminum - Alloy sheet and plate
ASTM C165	Measuring Compressive properties of thermal insulations
ASTM C177	Standard test method for Steady-state heat flux measurements & thermal transmission properties by means of the 'guarded-hot-plate' apparatus
ASTM C240	Standard test methods of testing Cellular glass insulation block
ASTM C302	Standard test method for Density and dimensions of preformed pipe-covering-type thermal insulation
ASTM C303	Standard test method for Density and dimensions of preformed block and board type thermal insulation
ASTM C335	Standard test method for Steady-state heat transfer properties of horizontal pipe insulation
ASTM C356	Standard test method for Linear shrinkage of preformed high-temperature thermal insulation subjected to soaking heat
ASTM C390	Standard criteria for Sampling and acceptance of preformed thermal insulation lots
ASTM C446	Standard test method for Breaking load and calculated modulus of rupture of preformed insulation of pipes
ASTM C518	Standard test method for Steady-state thermal transmission properties by means of the heat flow meter apparatus
ASTM C533	Standard specification for Calcium silicate block and pipe thermal insulation
ASTM C547	Standard specification for Mineral fiber pipe insulation
ASTM C552	Standard specification for Cellular glass thermal insulation
ASTM C591	Standard specification for Unfaced preformed rigid cellular polyisocyanurate thermal insulation
ASTM C592	Standard specification for Mineral fiber blanket insulation and blanket-type pipe insulation (metal-mesh covered) (industrial type)

ASTM C610	Standard specification for block and pipe thermal insulation
ASTM C612	Standard specification for Mineral fiber block and board thermal insulation
ASTM C795	Standard specification for thermal insulation for use in contact with austenitic stainless steel
ASTM C871	Standard test methods for Chemical analysis of thermal insulation materials for leachable chloride, fluoride, silicate and sodium ions
ASTM C892	Standard specification for High temperature fiber blanket thermal insulation
ASTM D1622	Test method for apparent density of rigid cellular plastics
ASTM D2126	Test method for response of rigid cellular plastics to thermal and humid aging
ASTM E96	Standard test methods for Water vapor transmission of materials

BS Standards and Specifications

BS 1902 Prt 6	Ceramic fibre products
BS 2972	Method of test for Inorganic thermal insulating materials
BS 4370 Prt 2	Method of test for rigid cellular materials
BS 5608	Specification for preformed rigid polyurethane (PUR) and polyisocyanurate (PIR) foams for thermal insulation of pipework and equipments

IS Standards and Specifications

IS 10085	Method for chemical analysis of zircon flour or sand
IS 11239	Method of test for Rigid cellular thermal insulation materials
IS 12436	Specification for Preformed rigid Polyurethane (PUR) and Polyisocyanurate (PIR) foams of thermal insulation
IS 1335	Method of direct determination of alumina in refractory material
IS 1527	Methods for Chemical analysis of high silica refractory materials
IS 277	Specification for Galvanized steel sheets
IS 3346	Method for determination of Thermal conductivity of thermal insulation materials
IS 737	Specification for wrought aluminum and aluminum alloy sheet and strip for general engineering purposes
IS 8183	Bonded mineral wool-Specification
IS 9428	Calcium silicate insulation blocks and pipe-coverings
IS 9842	Preformed fibrous pipe insulation- Specification

EIL Company Standards

7-13-0003	Hot insulation supports for storage tanks
7-13-0015	Hot insulation supports for spheres
7-12-0025	Fire proofing and insulation supports
7-13-0033	Hot insulation supports for horizontal vessels
7544-02-41-GL-56	Hot insulation supports for storage tanks

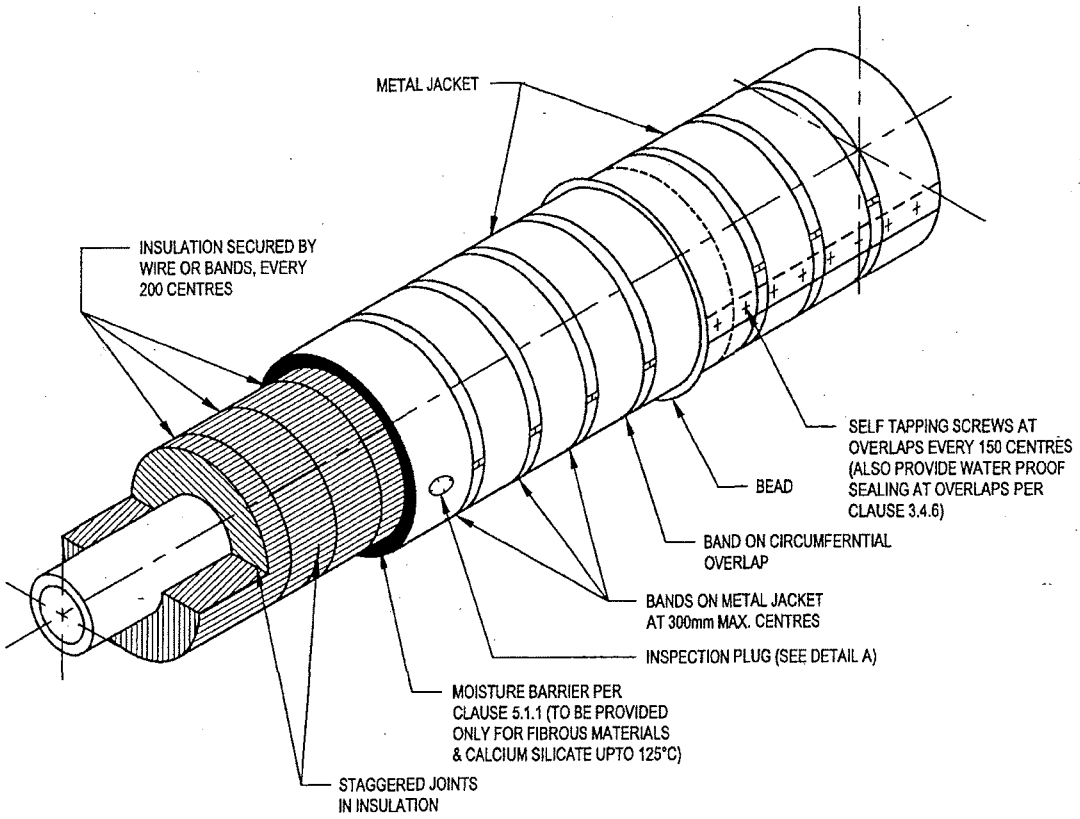

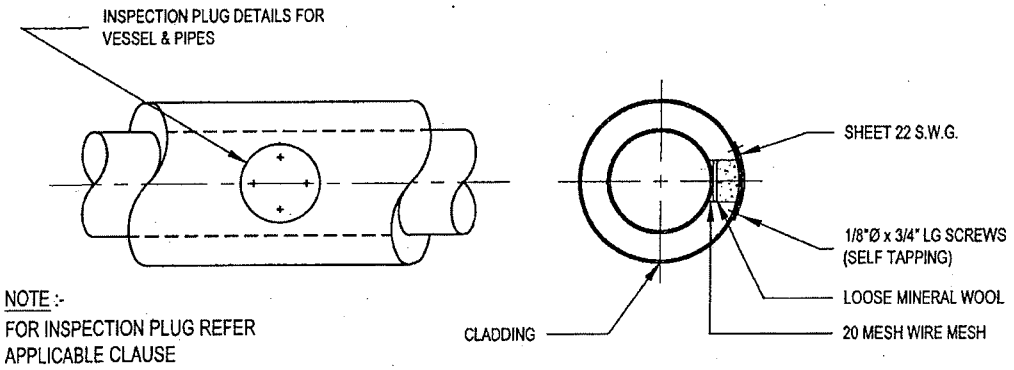

DETAIL 'A'

FIGURE – 01
PIPE INSULATION DETAILS
(FIBROUS &RIGID INSULATION)

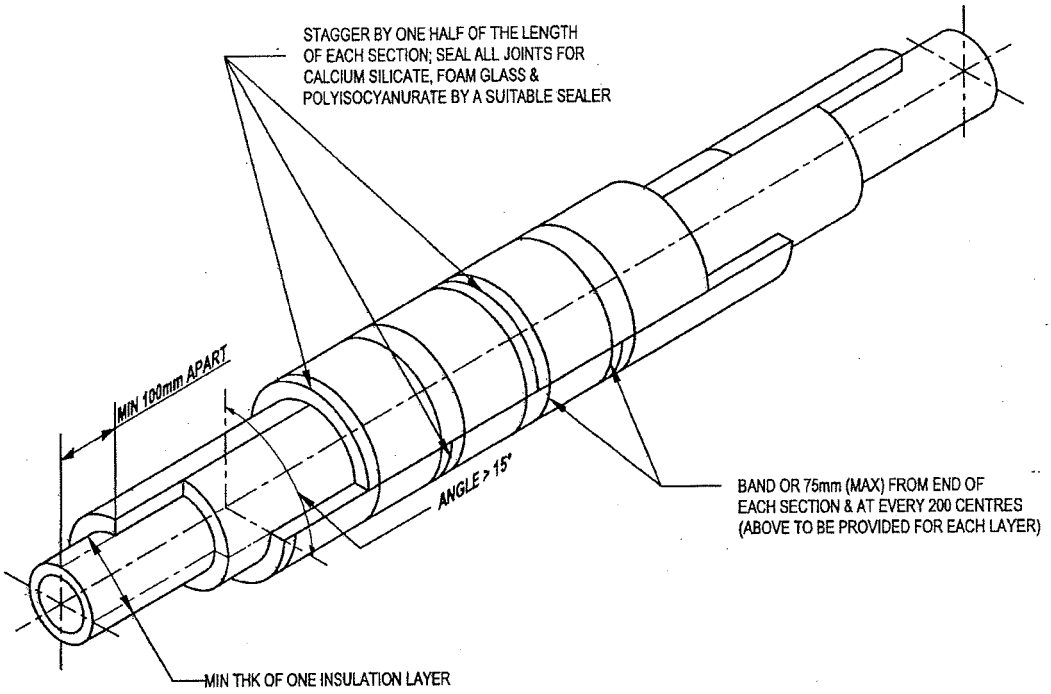

FIGURE – 02
PIPE INSULATION METHOD OF STAGGERING OF SECTIONS
RIGID & FIBROUS INSULATION (PREFORMED PIPE SECTIONS ONLY)

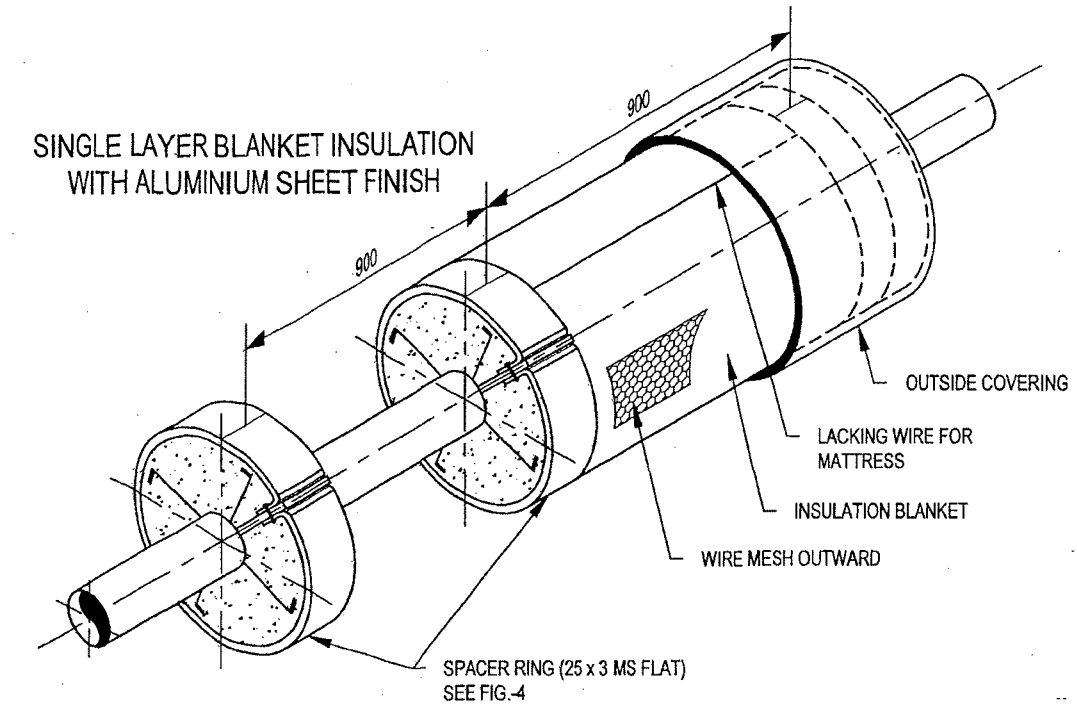

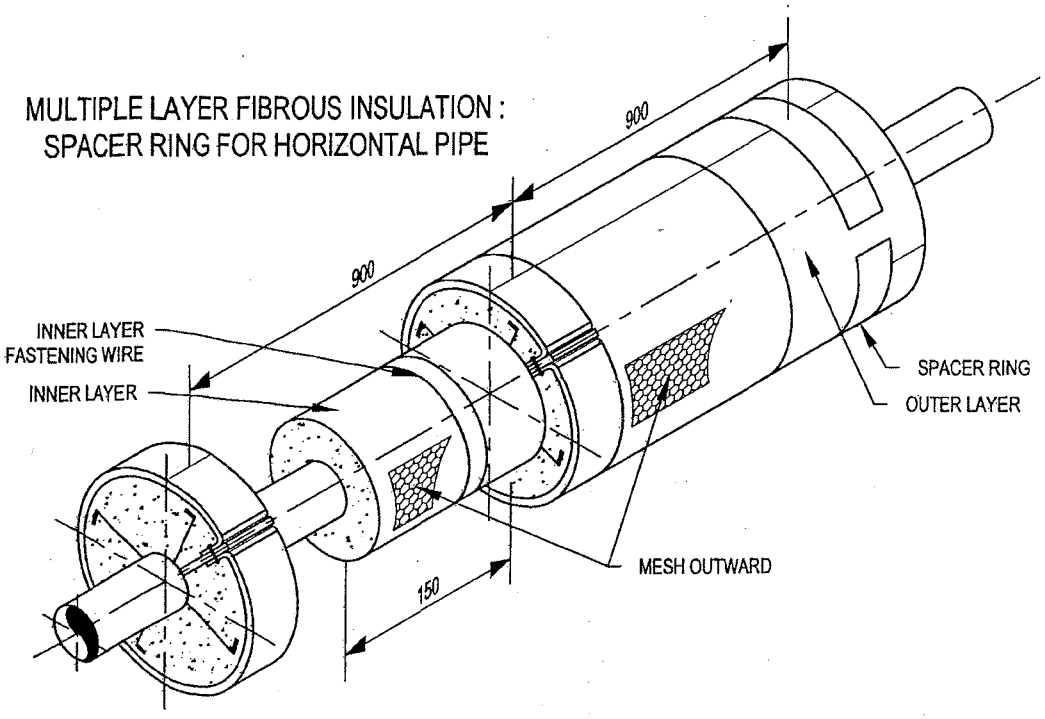

FIGURE – 03
HORIZONTAL PIPE : FIBROUS INSULATION; DETAIL OF SPACER RINGS FOR CLADDING SUPPORT

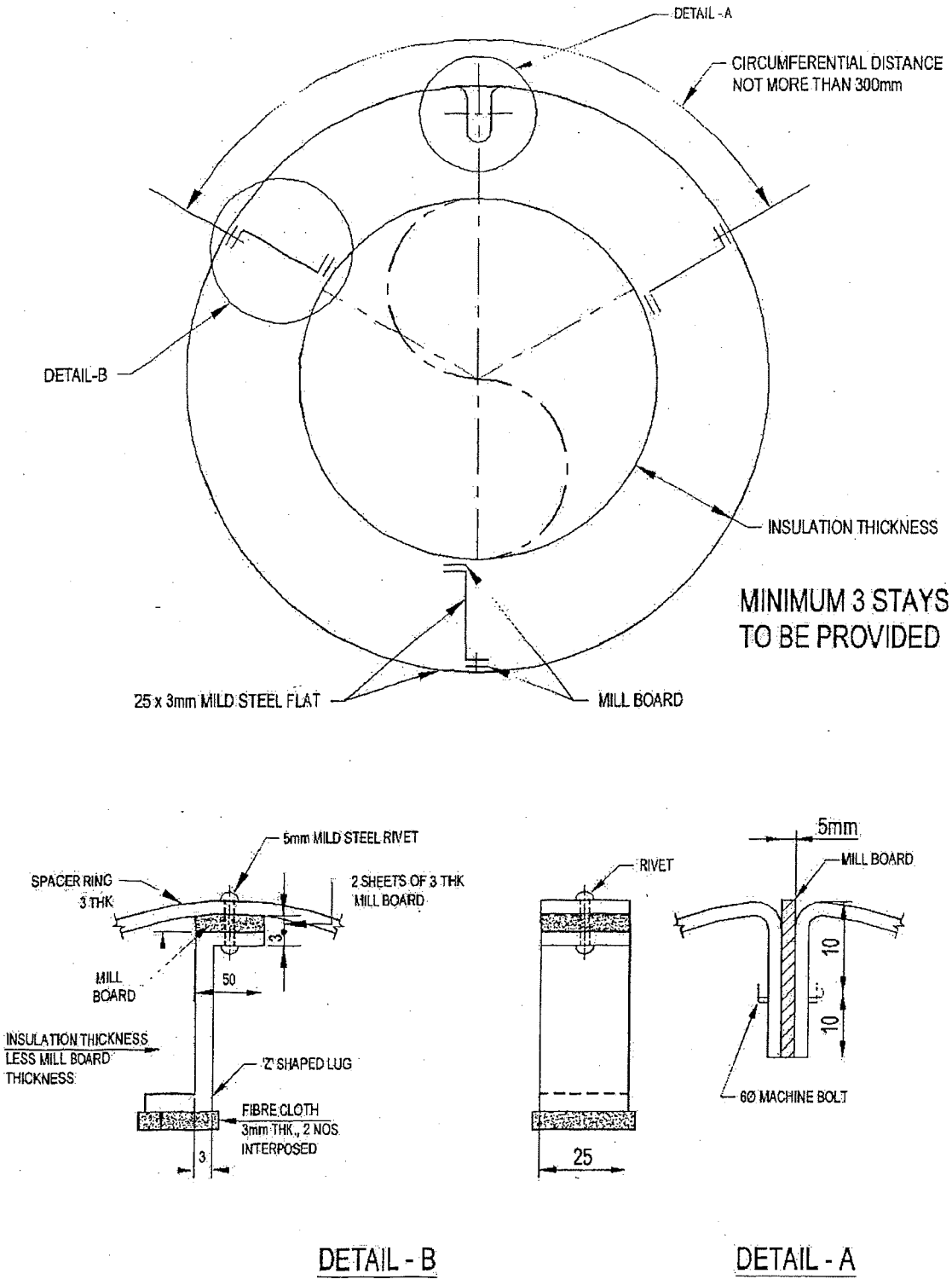

FIGURE – 04
DETAIL OF SPACER RING FIBROUS INSLUATION (MATTRESS)

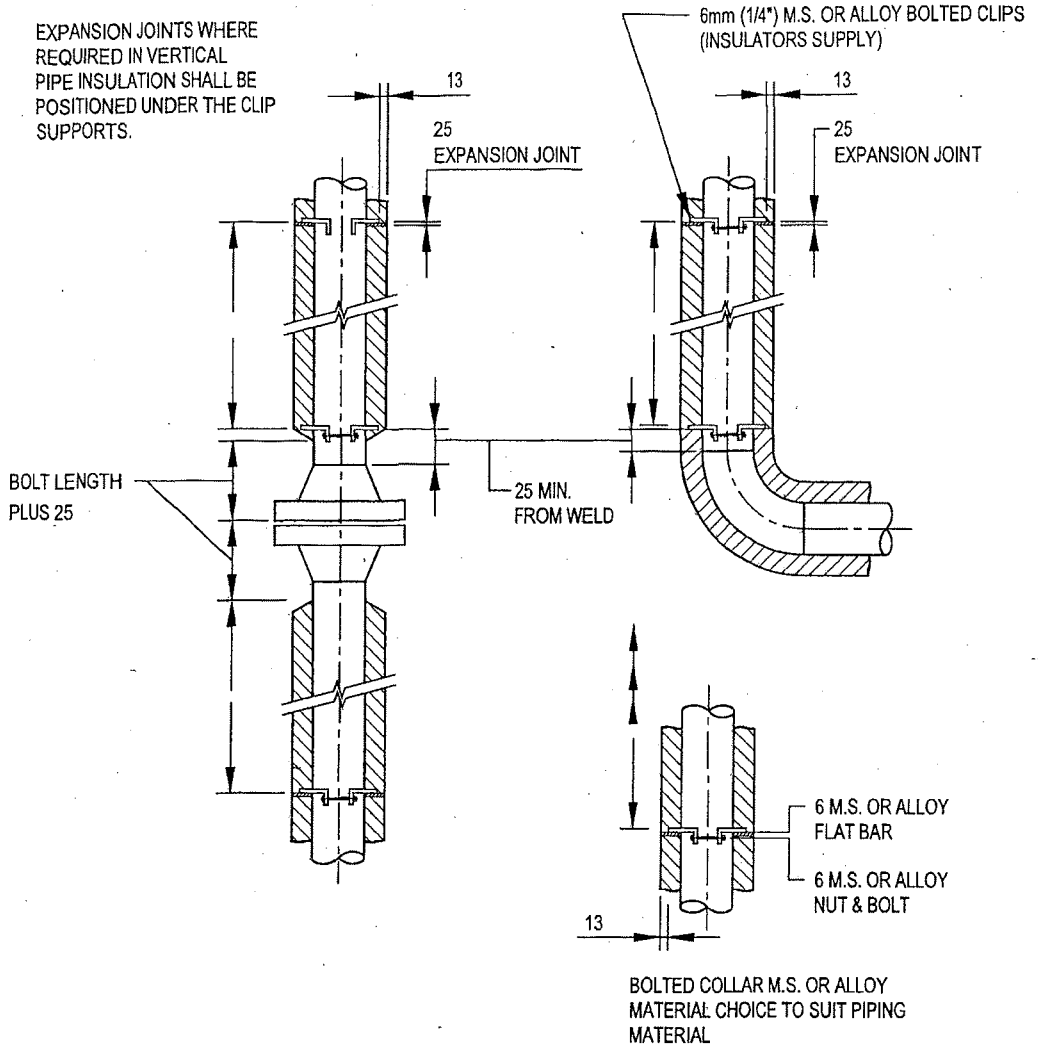

CLIP SPACING

PIPE TEMP. °C		MAX. SPACING 'D' MM	
UPTO 400		4500	
400 TO 500		3500	
500 TO 550		2500	

* CIRCUMFERENTIAL EXPANSION SHALL BE CONSIDERED AT THESE OPERATING TEMPERATURES.

FIGURE – 05
BOLTED ON INSULATION SUPPORT FOR VERTICAL PIPE

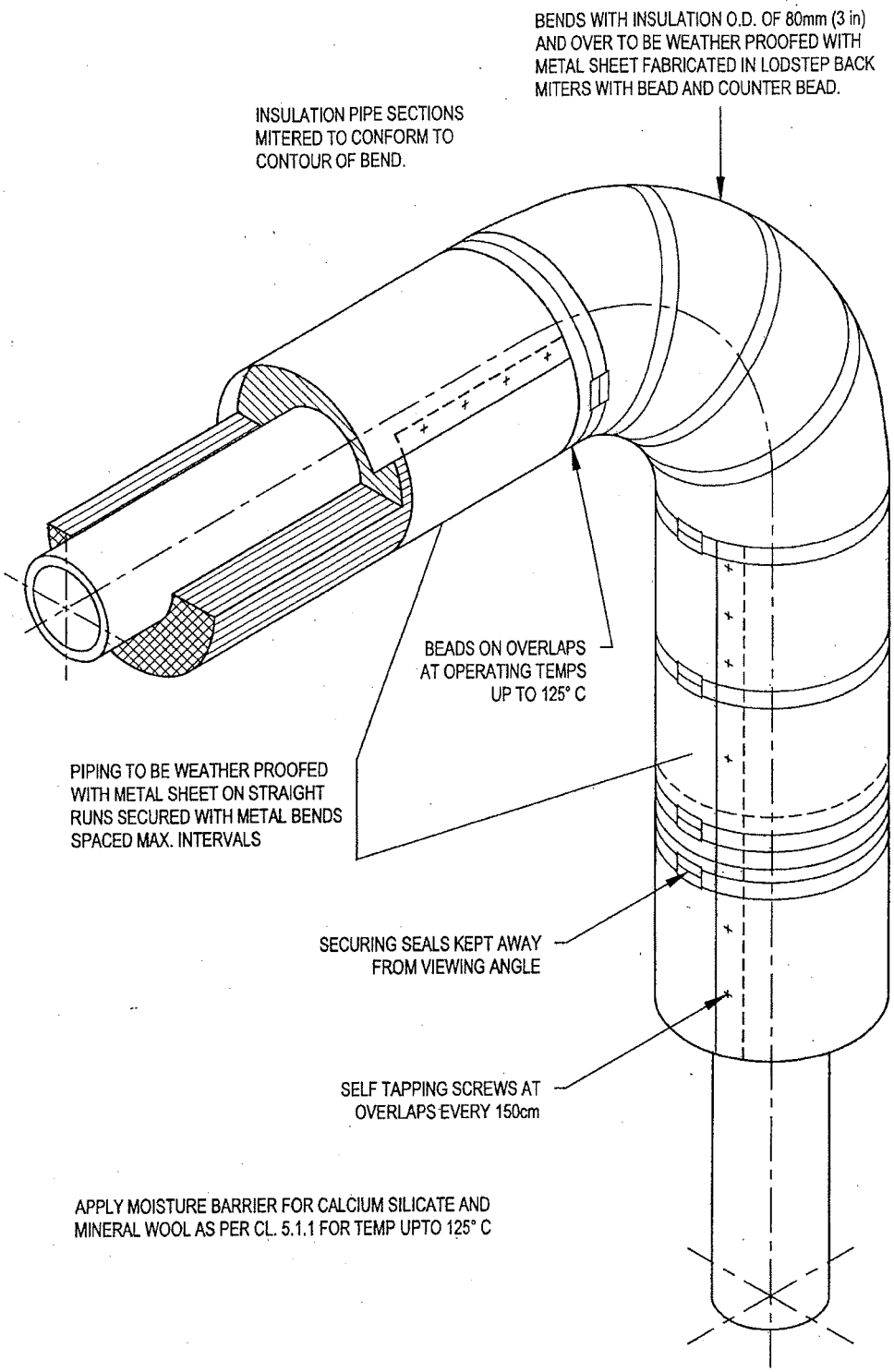

FIGURE – 06
INSULATION DETAILS FOR BENDS / ELBOWS

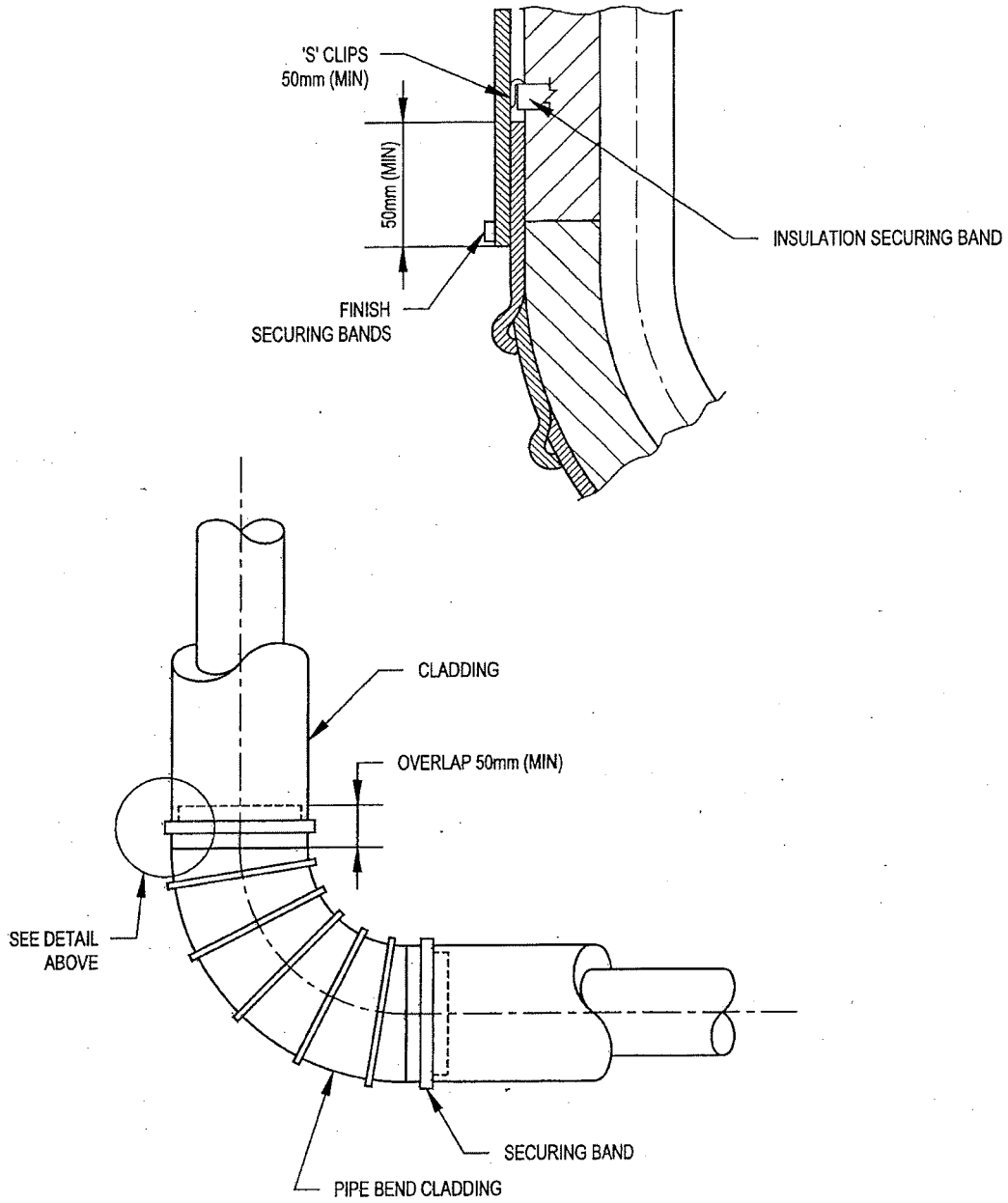

FIGURE – 07
INSULATION DETAILS : PIPE BENDS & ELBOWS

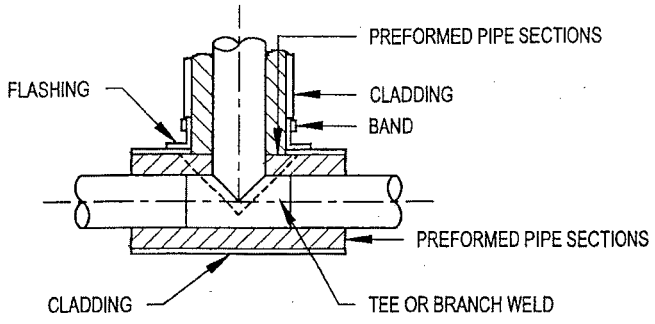

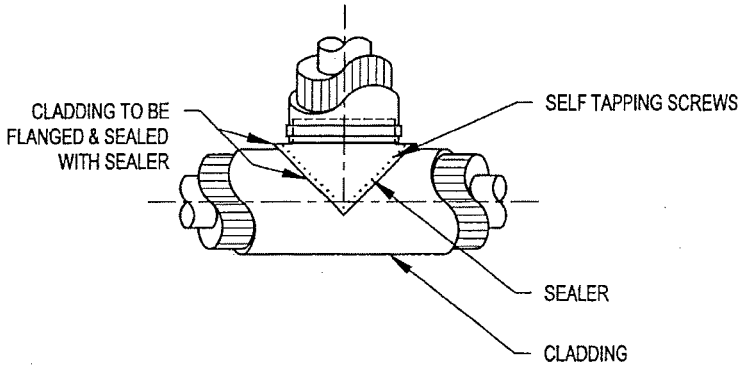

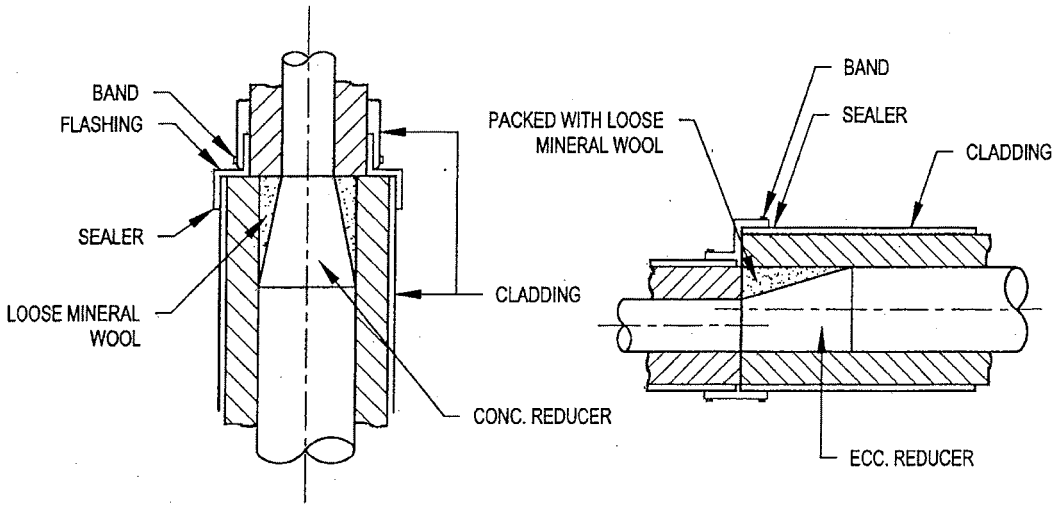

APPLY MOISTURE BARRIER FOR CALCIUM SILICATE ANS MINERAL WOOL

FIGURE – 08
INSULATION DETAILS: PIPE BRANCHED & REDUCER

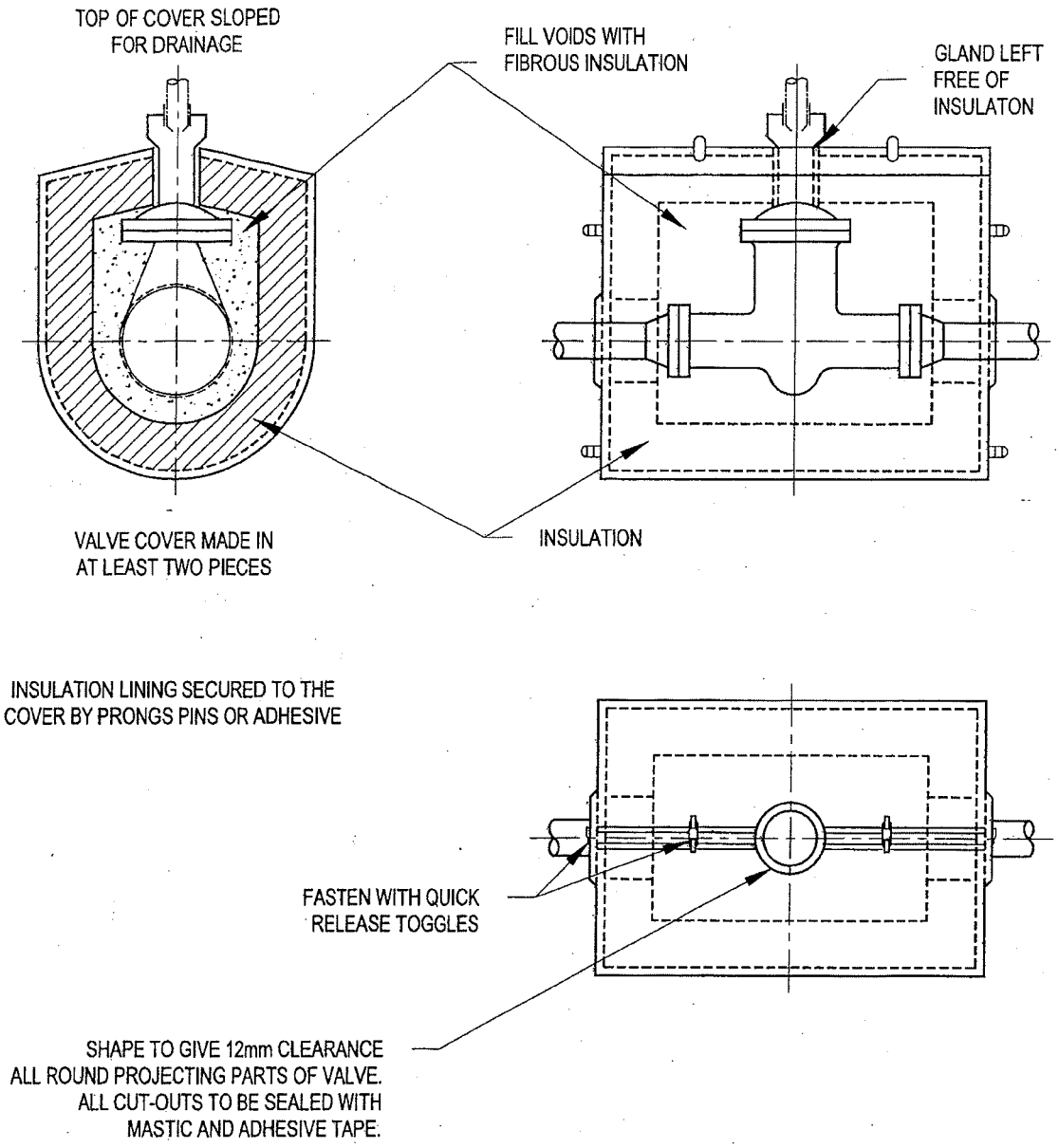

FIGURE – 09
INSULATED REMOVABLE COVER: VALVES

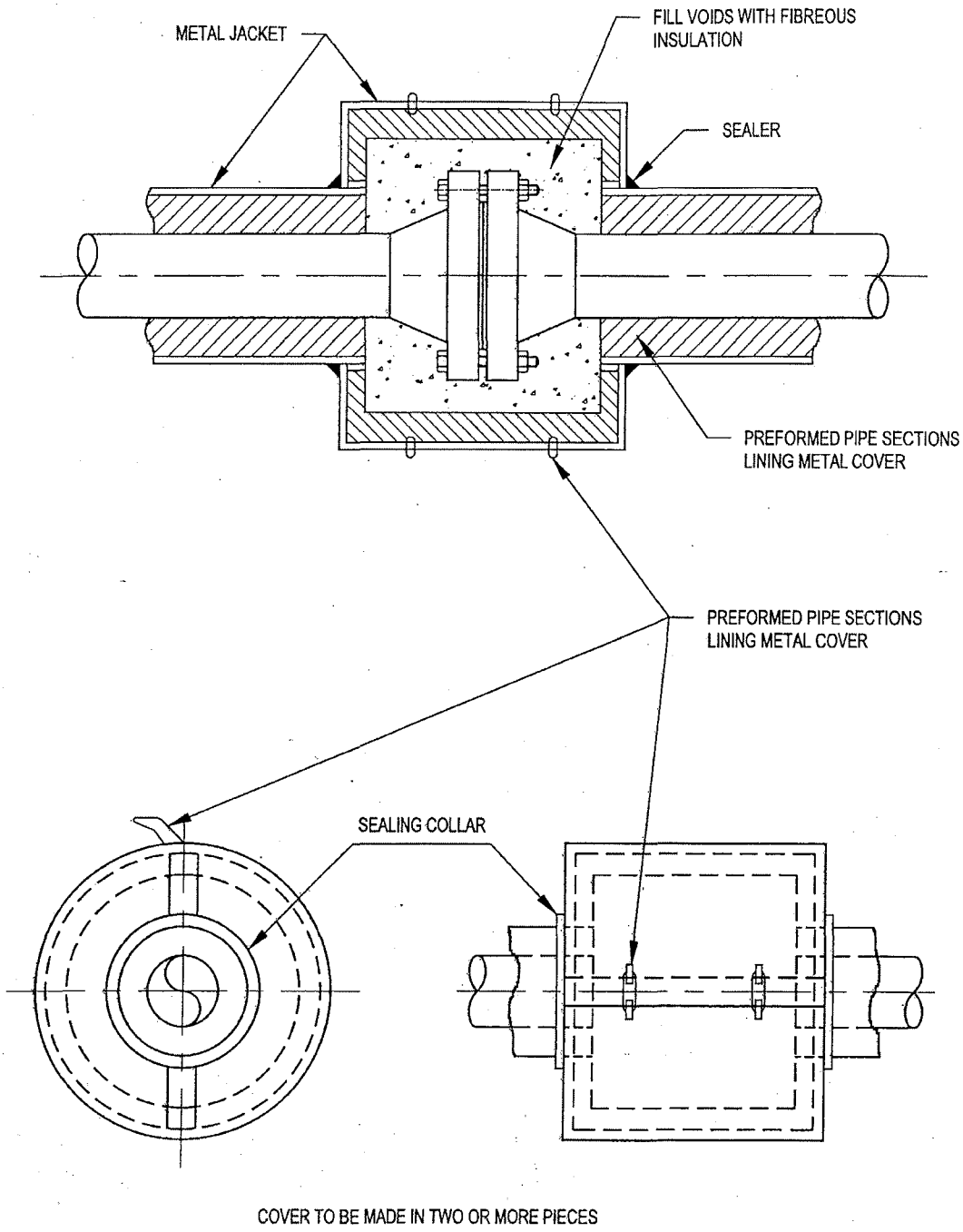

FIGURE – 10
INSULATION REMOVABLE COVER – FLANGED JOINTS

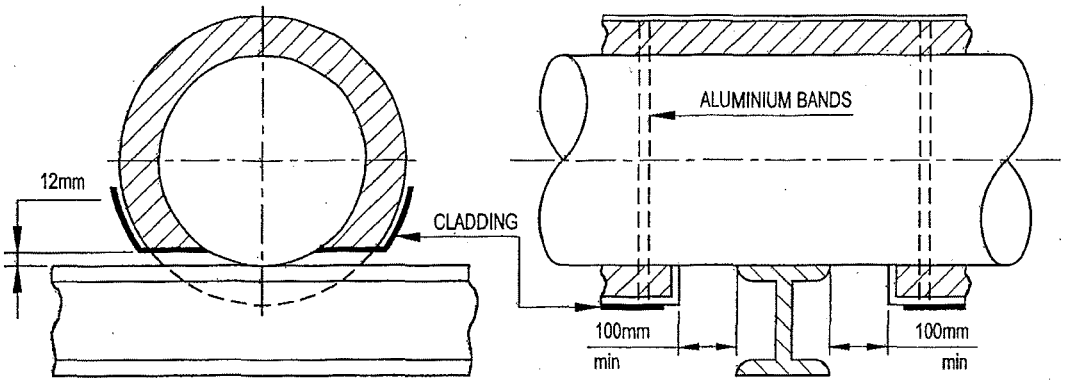

WHERE CLADDING IS TO BE CUT AWAY IT SHALL FIT CLOSELY TO
THE PIPE AND TO BE COMPLETELY WEATHERPROOF

INSULATION DETAIL AT LINES WITHOUT SHOES
(THIS SHOULD ONLY BE REQUIRED IN EXCEPTIONAL CIRCUMSTANCES)

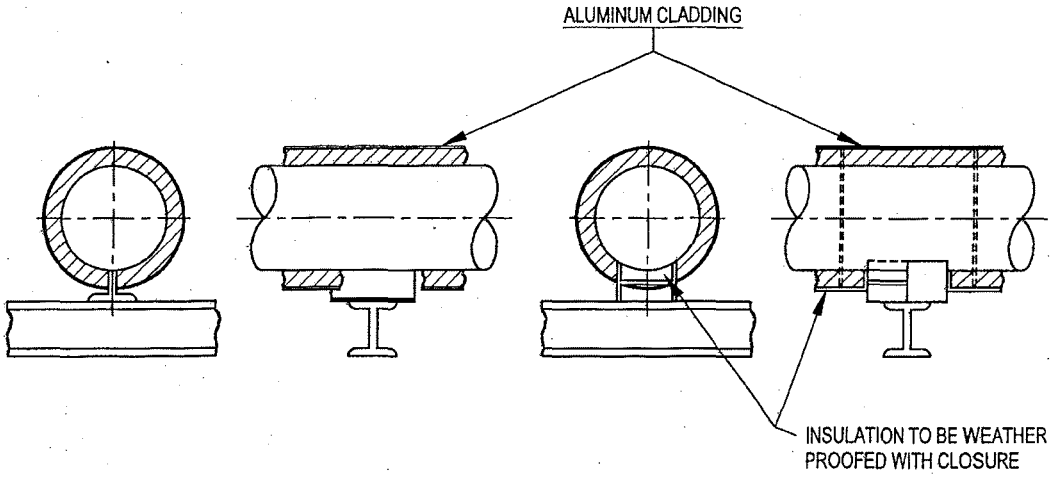

INSULATION OF LINE ON SHOES

FIGURE – 11
INSULATION DETAILS PIPE SUPPORTS

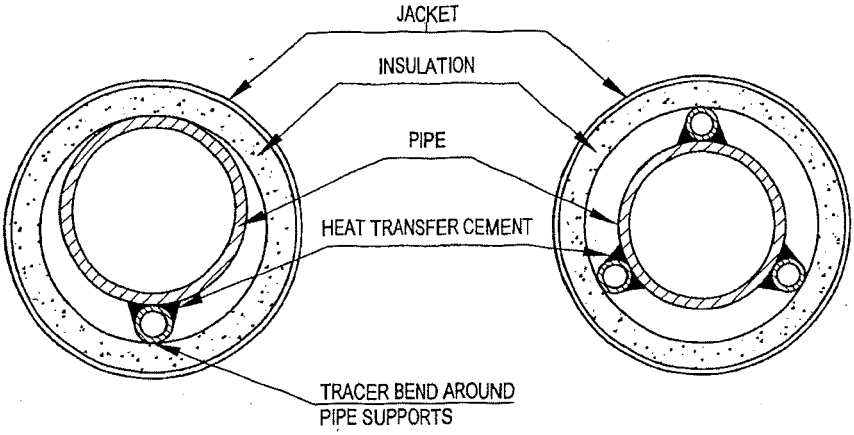

INSULATION FOR
SINGLE TRACER

INSULATION FOR TWO OR MORE
TRACERS EQUALLY SPACED

FIGURE – 12
INSULATION OF STEAM TRACED PIPING

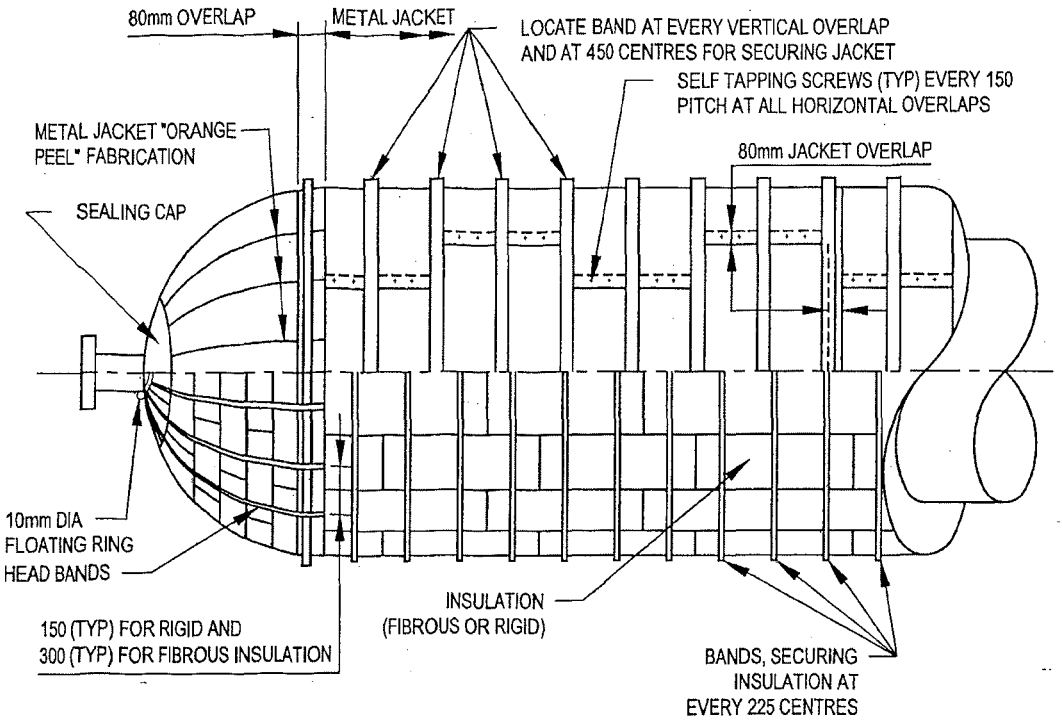

NOTES :-

1. SADDLE SUPPORTS FOR HORIZONTAL EQUIPMENT TOGETHER WITH SHOE AND ANCHOR SUPPORTS FOR HORIZONTAL PIPNG SHALL BE DESIGNED TO INCLUDE ELONGATED CUT-OUTS IN THE SUPPORT AT SUCH A DISTANCE FROM THE SUPPORTED EQUIPMENT AND PIPING TO ALLOW THE PASSAGE OF INSULATION SECURING BANDS AND TIES AROUND THE OUTSIDE FACE OF THE INSULATING AND FINISHING MATERIAL.

2. APPLY MOISTURE BARRIER FOR CALCIUM SILICATE AND MINERAL WOOL PER CLAUSE 5.1.1 FOR TEMPERATURES UPTO 125°C.

FIGURE – 13
HORIZONTAL EQUIPMENT INSULATION

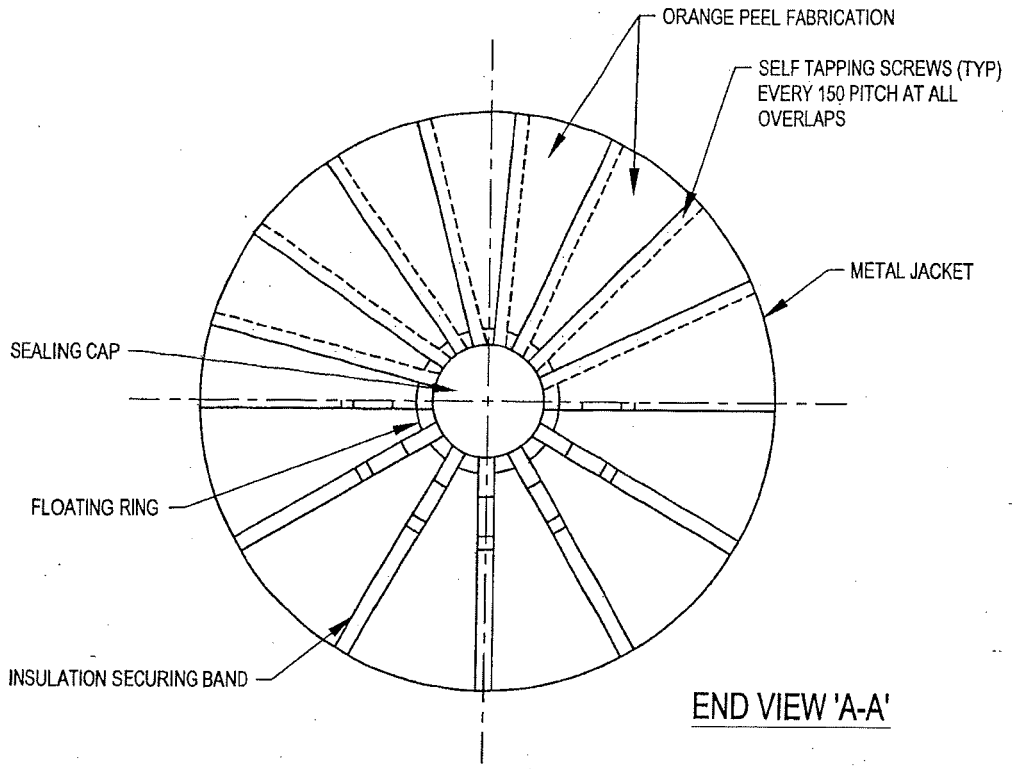

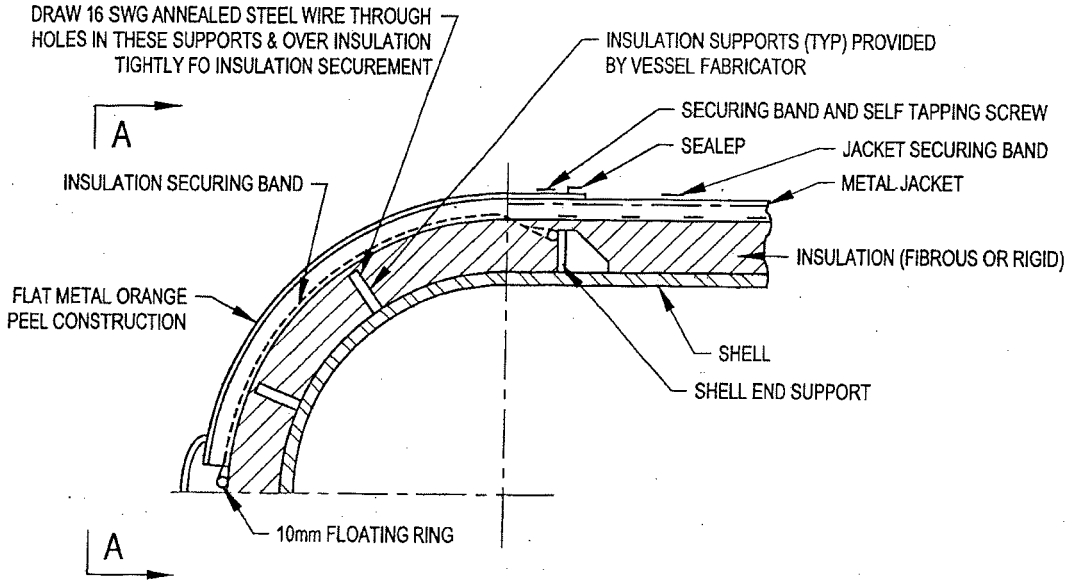

FIGURE – 14
HORIZONTAL EQUIPMENT HEADS

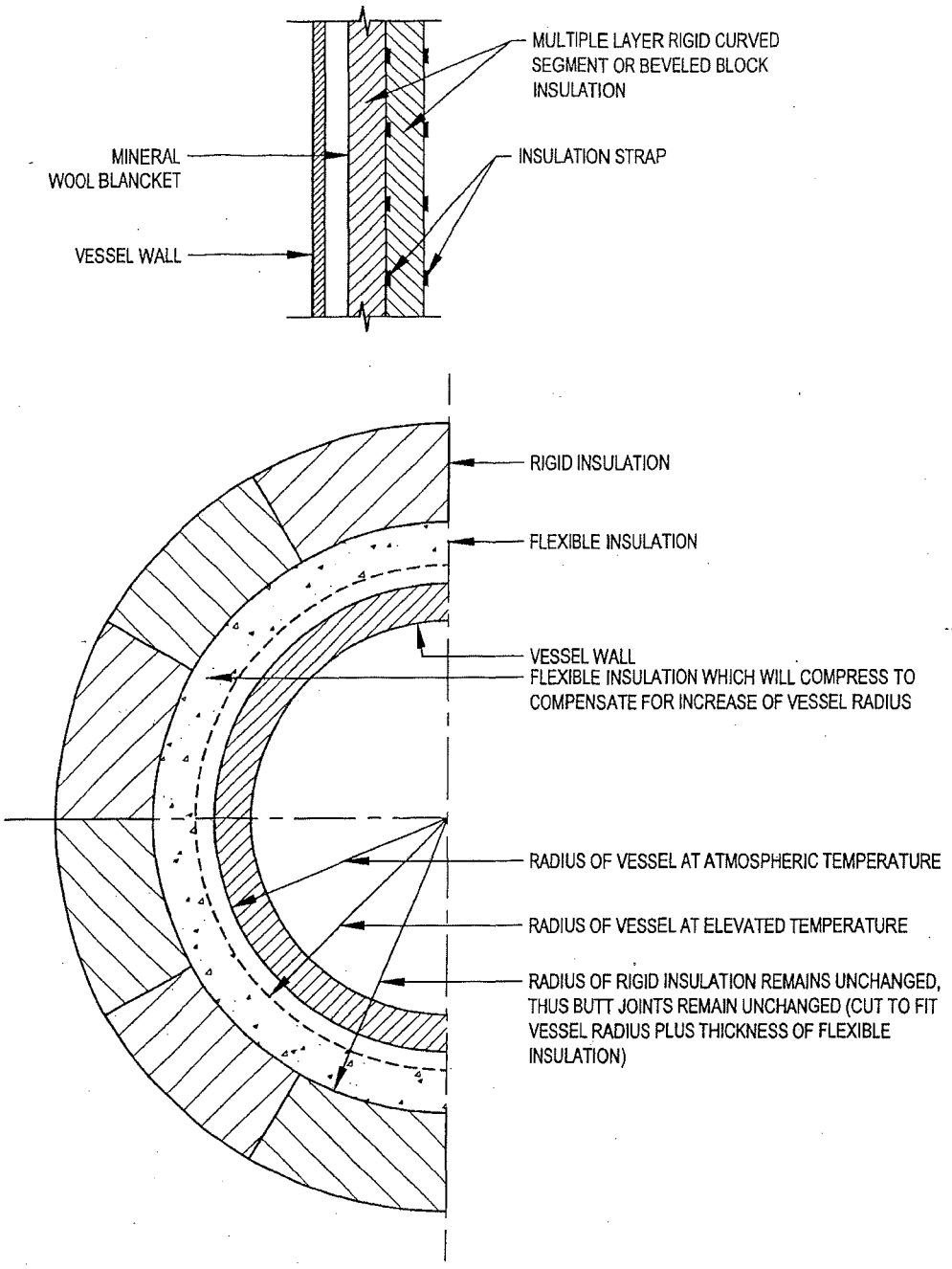

FIGURE – 15
USE OF FLEXIBLE INSULATION IN COMBINATION WITH RIGID INSULATION TO COMPENSATE FOR VESSEL EXPANSION

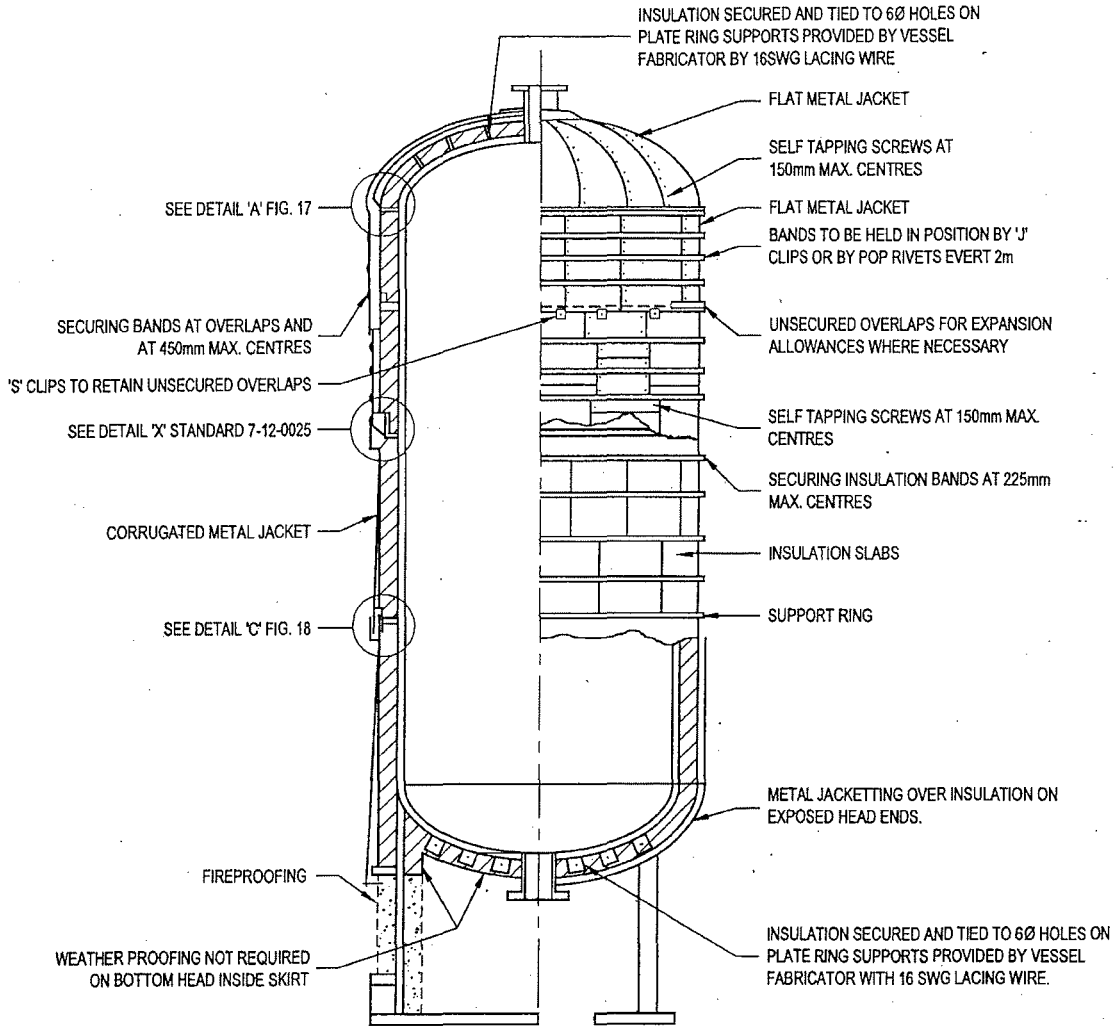

NOTE:-
APPLY MOISTURE BARRIER FOR CALCIUM SILICATE AND MINERAL WOOL PER CLAUSE 5.1.1 FOR TEMPERATURES UPTO 125°

FIGURE – 16
INSULATION DETAILS : VERTICAL VESSEL

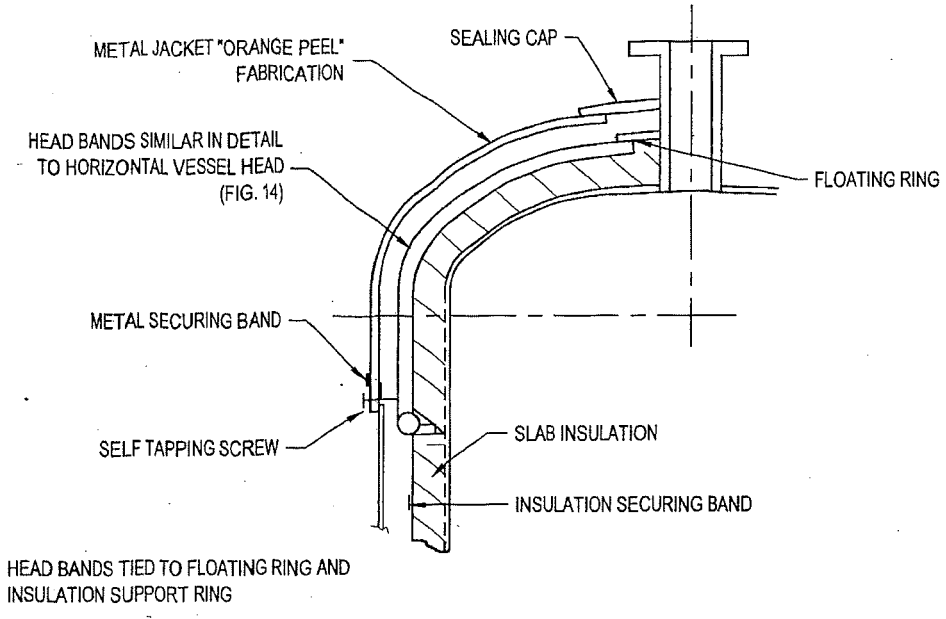

DETAIL 'A'

FIGURE – 17
INSULATION DETAILS VERTICAL VESSEL HEADS

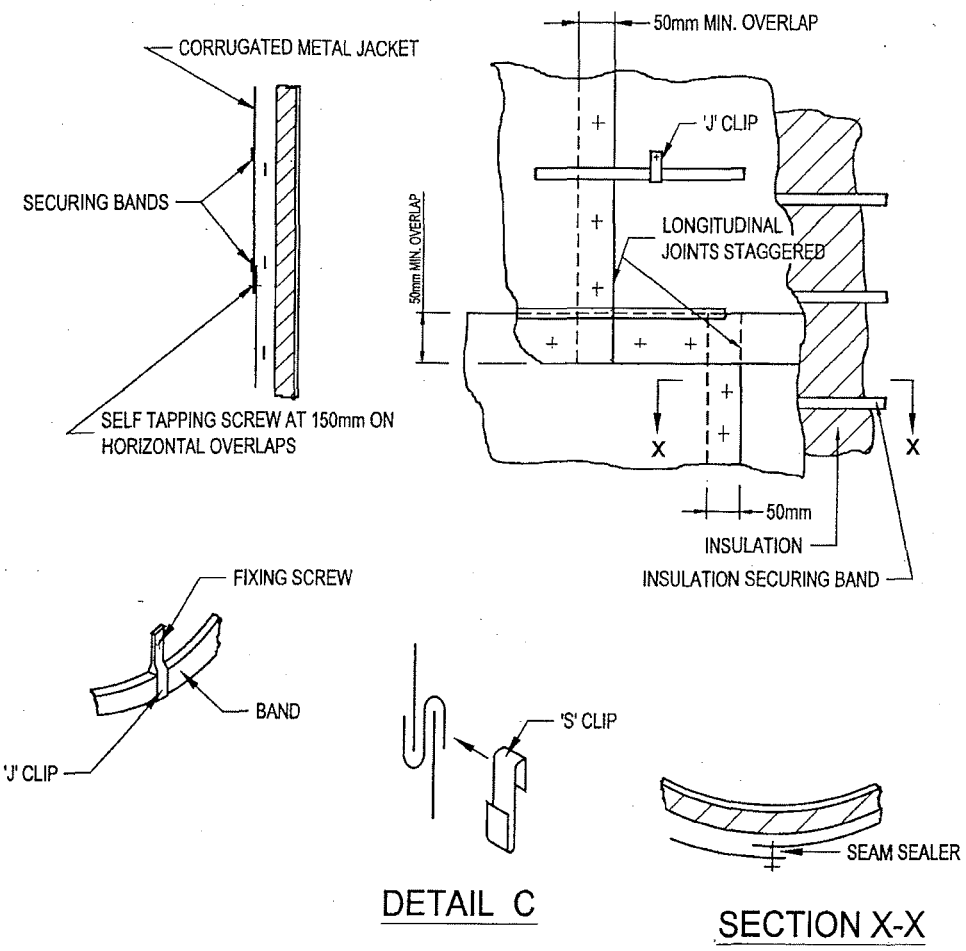

NOTE:

FINISHING SHEETING TO BE BANDED AND SCREWED. HORIZONTAL OVERLAPS LEFT UNSCREWED FOR EXPANSION PURPOSES SHALL BE SECURED AND SUPPORTED WITH 'S' CLIPS.

FIGURE – 18
INSULATION DETAILS : VERTICAL VESSELS

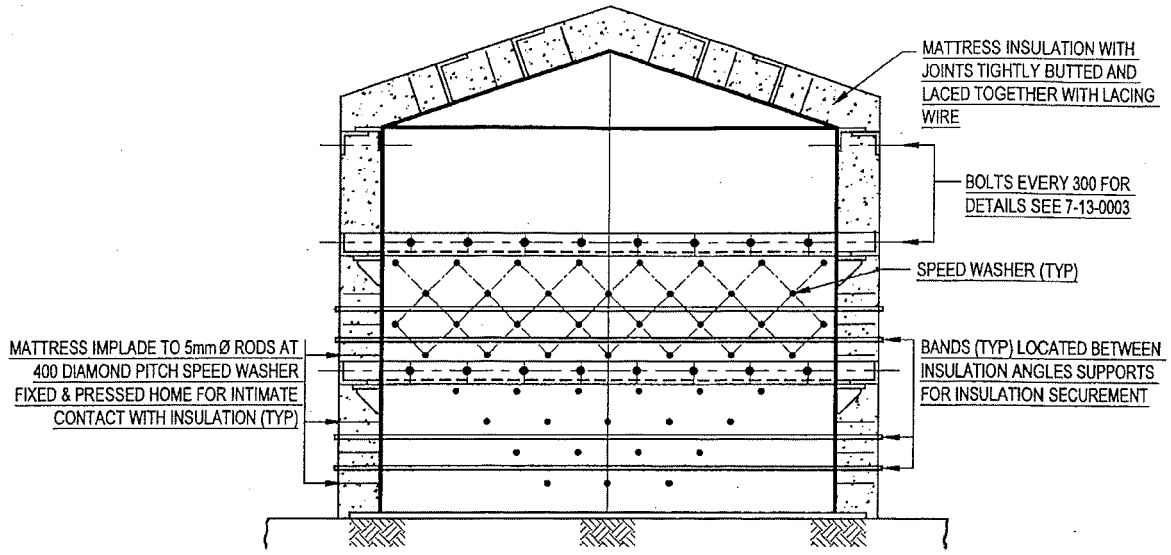

INSULATION SECUREMENT DETAIL

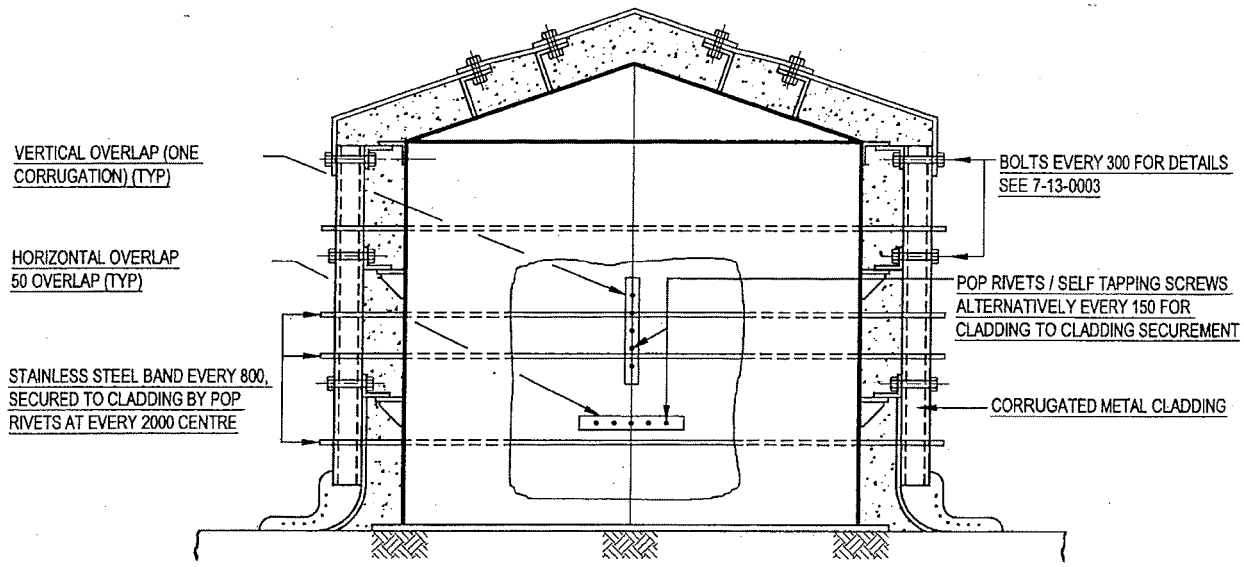

CLADDING SECUREMENT DETAIL

NOTE :- PROVIDE MASTIC MOISTURE BARRIER ON SHELL & ROOF INSULATION, PER CLAUSE 5.1.1 BEFORE APPLYING CLADDING

FIGURE – 19
INSULATION DETAILS : VERTICAL STORAGE TANK

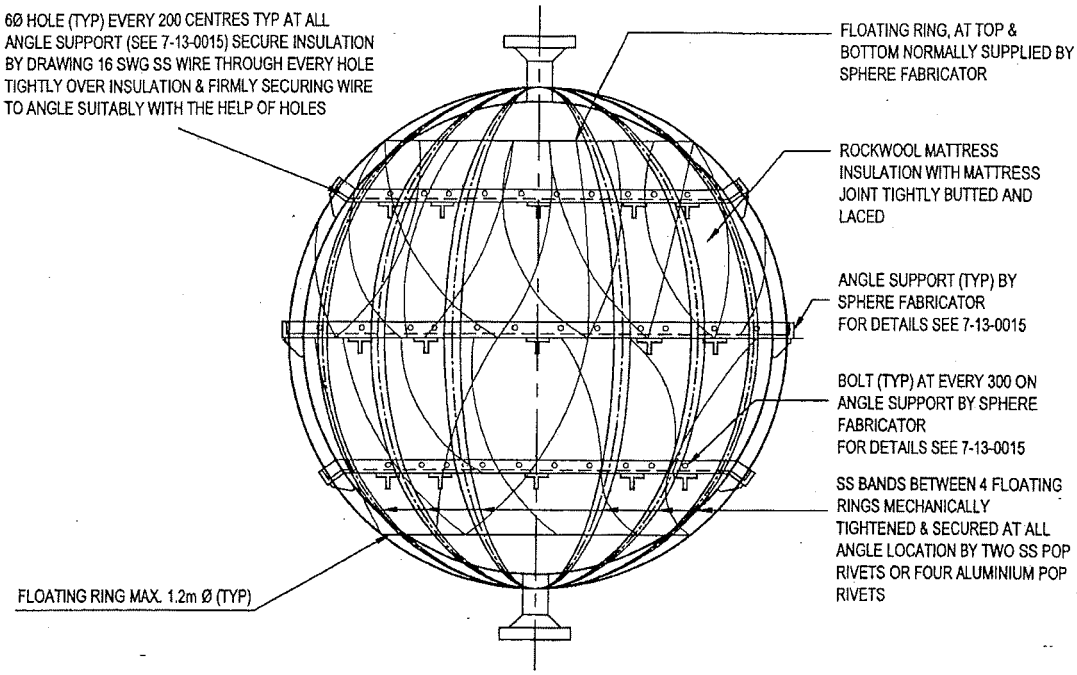

INSULATION SECUREMENT DETAILS

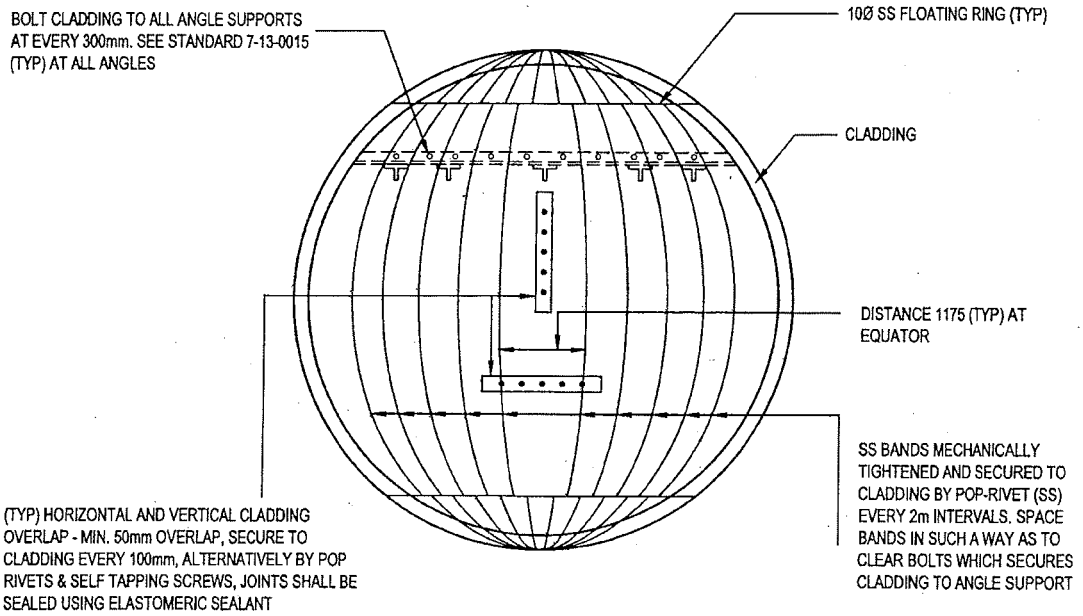

CLADDING SECUREMENT DETAILS

FIGURE – 20
INSULATION DETAILS : SPHERE

MRPL Engineering Design Basis For Safety Requirements

Rev. No	Date	Purpose
0	08/01/16	Issued for Design

SAFETY REQUIREMENTS FOR CONTRACTOR

BIDDER:

-Bidder shall furnish HSE policy and HSE Manual of Bidders Company along with the bid and his track record in safety for past three years.

Bidder shall furnish details of their safety department with CVs of safety officers in his bid document. One of the safety officers shall be present during the kick off meeting and from the day one of mobilization date.

A penalty of 5% of contract value will be levied on the contractor for absence of safety officer during kick off meeting and INR 10,000/- per day for subsequent absence from the date of site mobilization.

-The contractor MUST employ Qualified Safety Officers as per the table below, having about 5 years of relevant experience in construction and erection of Petrochemical Plants or refineries, as per The Building and other construction workers (Regulation of Employment and conditions of service) Act 1996 and Central Rules 1998 / The Karnataka Factories Rules 1969. Contractor shall ensure that all his workmen are aware about the nature of risk involved in their work and have adequate training for carrying out their work safely. Such Safety Officers appointed shall be dedicated and responsible only for safety. They should not be given any other responsibility. The contractor and his sub-contractor, if any, shall comply with the instructions given by MRPL Engineer In- Charge or his authorized nominee regarding safety precautions, protective measures, house-keeping requirements etc. Engineer-In-Charge from MRPL shall have the right to stop the work of the contractor, if in his opinion, proceeding with the work will lead to an unsafe and dangerous condition. Engineer-In-Charge shall get the unsafe condition removed or provide protective equipment at the contractors cost, which ever is applicable.

Table

Upto 250 Persons deployed by him at site	Deploy one qualified Safety Officer and additionally deploy Three Safety Supervisors

For 251 to 500 Persons — Two Safety Officers, Six Safety Supervisors and Ten Safety Stewards

For more than 500 persons — Three Safety Officers, Ten Safety Supervisors and Twenty Safety Stewards

Qualification criteria of safety officer:

BSc (Physics Chemistry only)/Diploma (Mech/Elect/Civil only) with post graduate Diploma in Industrial safety as per factories act 1948 and CLI (central labor institute) with min of 5 years experience in supervisory cadre.

OR

BE/BTech (Mechanical/Electrical/Civil only) with post graduate Diploma in Industrial safety as per factories act 1948 and CLI (central labor institute) with min of 2 years experience in supervisory cadre.

Qualification criteria of safety supervisor:

BSc (Physics Chemistry only)/Diploma (Mech/Elect/Civil only) with qualification in industrial safety with relevant experience.

PERSONNEL :

- Personnel / workmen (age 18 years & above) deployed at site should be physically / medically fit.

Labours/workers shall not bring children/babies to project site.

- Contractors and their workmen should restrict their activities to the site allocated to them.

- All contract men shall wear IS make PPEs like gloves, goggles, face shields, safety belt, Safety Helmets, Safety Shoes etc during construction. They will not be permitted to enter the construction site without wearing safety helmet & safety shoes. Damaged PPEs shall be taken out from use and disposed off properly.

- The contractor shall ensure that their men do not tamper with the facilities in operation. They shall not operate any Valves/ Switches etc.

- The contractor shall ensure that his workmen do not move around freely inside refinery premises other than the assigned place of work & also do not sleep anywhere inside refinery premises.
- The personnel engaged by the Contractor shall maintain good conduct and discipline Commensurate with Industrial standard. If in the opinion of the Engineer-in-charge any of the personnel have not maintained good conduct and discipline, the Contractor shall remove such personnel immediately from MRPL premises and provide alternate personnel.
- The contractor Supervisors and Engineers must get themselves conversant with MRPLôs standard safety procedures, safety norms, Rules and Regulations that are in force. They must also be conversant with the MRPLôs Emergency Procedures and Emergency telephone numbers and should ensure display of same at prominent place.

USE OF FIRE WATER :

Contractor will have to seek written permission from MRPLôs Engineer-In-Charge, before using Firewater for any hot work within the refinery.

SAFETY PROCEDURE TO BE FOLLOWED :

GENERAL :

- Special safety precautions to be taken by the bidder or their personnel working in an operating refinery are given below. The safety procedure may undergo a change from time to time, which will be intimated and its bidding for the contractor to follow and implement the them.
- In addition to the following minimum safety requirements, the contractor must comply with the safety requirements, norms, rules and regulations as per the Factories Act 1948 and Karnataka Factories Rules 1969, ILOôs (International Labour Organisation) published hand book titled ñSafety and Health in Building and Civil Engineeringò.
- The contractor must prepare a detailed ñSafety Programmeò and submit it Engineer In-charge of MRPL immediately after the finalization of contract / placing of LOI / order. This will include HSE Policy, Safety Responsibilities at various levels, Formations of Safety Committees and meetings, Method statements, Job Safety Analysis (JSA), Safety inspections, various pre-inspection checklists, Safety manuals, HSE Audits, Emergency Plans, Safety procedures to be

implemented for all the activities, deputation of Safety Officers, enforcement of safety practices, compensation in case of accidents, Life Insurance and ESI coverage as per the Labour Laws for contractorôs employees etc.

- Bidder shall devise a procedure on Accident Reporting. All accidents including Near Misses and property damages to be reported as per the Accident Reporting Procedure in force. All Accidents including Near Misses to be communicated immediately to owner /Project consultant over telephone / verbally / and later submit the accident report. All accidents must be investigated, classified and analysed. Monthly Accident statistics must be developed and circulated. Bidder shall maintain a register of all such accidents.

- During the mobilization, equipments, machines, tools, tackles etc. to be inspected at the site from where it is being mobilized. Damaged ones should be discarded and ensured not mobilized at MRPL site. The statutory checks, inspections and certification is carried out before mobilizing at MRPL site. Necessary repairs and maintenance to be carried out and equipment, machine, tools, tackles etc. is mobilized at MRPL site in working condition. The previous records of maintenance and the competent persons certificates to be made available during mobilization and submitted to MRPL / Project consultant. The equipments, machines, tools, tackles, etc to be tagged and mobilized.

- A Safety Committee must be formed to discuss accidents, Unsafe Acts and Unsafe conditions. This should be chaired by the High ranking Official / Project-In-Charge with equal participation both from supervisory and non-supervisory cadres of employees. Engineer In-Charge of MRPL also should be involved in such meetings as an observer. The frequency of meetings shall be once in a month minimum and actions taken to avoid recurrence of Nearmiss, Minor injuries etc.

Circular of the meeting must also be issued to Owner /Project consultant at least one week in advance. Minutes of the meetings to be prepared on the same day and submitted on next day of the meeting.

The contractor shall take all safety precautions during the execution of awarded work and shall maintain and leave the site safe at all times. At the end of each working day and at all times when the work is temporarily, suspended, he shall ensure that all materials, equipment and facilities will not cause damage to existing property, personal injury or interfere with other works of the project

or station. The contractor shall comply with all applicable provisions of the safety regulations, clean up programme and other measures that are in force at the site.

- HSE Audits to be conducted once in three months by a team of Senior Officials of the contractor. Report on findings of such Audit to be submitted to the owner / Project consultant and compliance report of the suggestions on findings to be submitted weekly to owner /Project consultant.

Joint inspection of safety and audit of safety to be conducted every month and the report and protocol signed by all parties safety officers with signatures of RCMs of contractor and consultant shall be part of subsequent RA bill.

- Method statement along with Job Safety Analysis to be submitted at least 15 days in advance before starting of any activity.

Prior information of high risk jobs as planned shall be informed with short details of the work, job safety analysis report to the consultant / owner at least 48 hours before starting of such jobs.

High risk jobs like fabrication at height, lifting and shifting, erection of equipments etc shall be video recorded by the contractor.

- The contractor shall provide and maintain all lights, guards, fencing, warning sign, caution boards, other safety measures and provide for vigilance as and where necessary or as required by the Engineer-In-Charge or by any duly constituted authority for the protection of workers or for the safety of others. The caution boards shall also have appropriate symbols visible during night also.

- Adequate lighting facilities, including emergency lighting, such as floodlights, hand lights and area lighting shall be provided along with ELCBs by the contractor at the site of work with isolation switch known to all at site with proper display, storage area of materials and equipment and temporary access roads within his working area. The contractor shall obtain written approval of the Engineer-In-Charge to the lighting scheme and place of tapping prior to its installation.

CCTV cameras to be installed by the contractor to cover all construction spots.CCTV monitor with automatic screen switching shall be available inside RCMs office. Recorded video from all CCTV cameras shall be retrievable for previous 10 days.

Number of cameras to be considered shall have area as the basis. EPCM consultant shall decide the same.

Use of devices like Distress alarm system for all personnel entering into confined space to be mandatory.

Staircases shall have temporary hand rail and guard till permanent handrails are fabricated and installed.

The contractor shall plan his operations so as to avoid interference with the other departmental works, other contractors or sub-contractors at the site. In case of any interference, necessary coordination shall be sought by the contractor from the Department for safe and smooth working.

The contractor shall be held fully responsible for non-compliance of any of the safety measures, procedures and delays, implications, injuries, fatalities, property damage and environmental degradation and compensation arising out of such situations or incidents. The contractor should device a procedure to maintain head count of his personnel manually or with an installation of punching machine at site and ensure evacuation of his personnel through defined emergency exit in case if situation demands.

- Smoking is prohibited in the work site / offices.

Consumption of alcohol and any other intoxicating material shall be also treated as safety violation and heavy penalty of INR 10000/- shall be levied on the main contractor per person consumed.

- Radiography source and also the Explosives used for controlled blasting will not be permitted to be stored at site.

Accidents/Incidents shall be reported to MRPL/Project consultant EIC immediately over telephone/mobile. Contractor shall record the same in site register of such reporting with time of report.

Detailed accident report with photographs to be submitted to factory manager and project In-charge from MRPL/consultant within 12 hours of such incident/accident.

CERTIFICATION FOR CONTRACTORS EQUIPMENTS :

- Contractorôs Vehicles/Engines and approved electrical / mechanical equipments & lifting tools / tackles, welding generator that are to be used at construction site are to be certified by competent authority. Statutory checks are to be carried out and records are to be maintained by contractors to ensure healthiness. These certificates will be regularly checked by MRPL engineer in-charge.
- The Contractor shall ensure that all industrial consumables such as Oxygen, Acetylene, Argon, Nitrogen, welding electrodes etc. are approved by MRPL, tested and records maintained by the contractor as per Gas Cylinder Rules before they are used for the job. LPG for gas cutting purpose is not allowed.
- The Fire prevention / protection and safety equipments (including Personal Protective Equipments) should be certified by MRPL engineer in-charge.

HEALTH AND HYGIENE :

- Sufficient number of toilets shall be provided by the contractor for its workmen and hygiene standard should be maintained.

Contractor to ensure no water stagnation at site.

Potable water facility for all workers shall be provided and maintained by the contractor.

Inspection of drinking water,sanitation,waste collection,house keeping shall be done every Monday,Thurseday and Saturday by the consultant/owner. If any observations are made, the same shall be treated as safety/HSE violation and shall attract a penalty of Rs 10,000/- per violation.

Availability of dust masks shall be ensured by the contractor at site.

Contractor to maintain affordable hygienic canteen for the workers.

- The contractor must maintain record of medical examinations of its employees as per The Building and other construction workers (Regulation of Employment and conditions of service) Act 1996 and Central Rules 1998 and The Factories Act 1948 and The Karnataka Factories Rules, 1969. This will include eye test of crane operators, vehicle drivers and all others.
- Adequate means and personnel for rendering first aid should be readily available at site and during working hours at places where work is carried out.
- Medical aid for First-Aid should be available.

- First Aid kits or boxes, as appropriate, should be provided at the workplaces and on motor vehicles, locomotives and be protected against contamination by dust, moisture, etc.
- Stretchers or carrying baskets so constructed that persons can be transported without having to be transferred from the stretcher or the carrying baskets should be readily available.

Contractor shall keep well equipped ambulance as per factories act 1948 at site which shall be checked for its functioning on daily basis.Ambulance driver shall be available at site 24 hours and shall be filled with fuel always to run atleast 100 Kms.

- When workers are employed underground or beneath structures or pits or other conditions in which they may need to be rescued, suitable rescue equipment like tripod with pulley and safety belt should be readily available at site at or near the construction site along with trained rescue workers.

VEHICLE MOVEMENT :

- The contractor shall conduct his operation so as not to interfere with the use of existing roads at or near locations where the work is being performed.
- Special precautionary measures should be taken during transportation of long sized cargo, route as defined should be followed and for safety of personnel (with proper escort) and damages to the facilities should be avoided. Procedure for vehicle entry and Speed limits in Refinery should be strictly followed. Vehicles and cargos passing through refinery should have approved spark arrestor fitted.
- When interference to traffic is inevitable, notice of such shall be given to the Engineer- In-Charge of MRPL well in advance with the details of start of the work and time required, storage of materials, and details of the proposed methods of providing the required facilities for safe and continuous use of roads and obtain his clearance.
- The contractor shall exercise full care to ensure that no damage is caused by him or his workmen, during the operation, to the existing water supply, sewerage, power or telecommunication lines or any other services or works. The contractor shall be required to provide and erect before construction, substantial barricades, guardrails and warning signs. He shall furnish, place and maintain adequate warning lights, signals etc, as required by the Engineer-In-Charge.

- Vehicles must have green and red flags for the cleaner to guide driver. All vehicles entering MRPL premises shall have driver and cleaner.
- The vehicles must be maintained as per the preventive maintenance schedule of the manufacturer / supplier.
- Vehicles to be inspected fortnightly by trained technicians as per the inspection checklist. Pre-inspection checklist to be formed to that effect.
- All vehicles to bear a sticker. ñIf you notice this vehicle is over speeding then please inform on telephone noé é é é é ..ò.
- Tractors and trucks should not be used for transporting personnel.
- Every vehicle should have the contractor's name prominently displayed on Tractor Trolleys, trucks, jeeps, cranes, JCBs, Poclains, trailers. The display board should be put on front and rear side of each of the vehicle.

Tractor trolleys must have independent brake systems both on tractor as well as trolleys.

- All vehicles must be fitted with spark arrestors once the hydrocarbon is introduced inside the units.

Tippers/trucks carrying debris and soil/mud/sand shall ensure that there is no spillage of material to road. If any such spillage observed the same need to be cleaned and cleared by the contractor immediately. Wheels of the trucks and vehicles shall be clean and free from mud.

- Contractor to maintain Inspection and maintenance logs for every vehicle.
- Any kind of repair work on contractor's vehicle is to be carried out only inside the work shop or designated place and not allowed inside the battery area or any where at on road or at site.

SAFE MEANS OF ACCESS :

- The contractor must possess adequate numbers of self retractable type fall arresstors (of different sizes viz. 6 m, 20m, 40m, and 60 m), Safety nets and Safety Belts (ISI approved).
- Adequate and safe means of access and exits shall be provided for all work places, at all elevations. Using of scaffolding members (avoiding a ladder) for approach to high elevation shall not be permitted.

- Suitable scaffolds shall be provided for workmen for all works that cannot be done safely from the ground, or from solid construction except such short duration work as can be done safely from ladders. Ladder shall be of rigid construction having sufficient strength for the intended loads and made of metal and all ladders shall be maintained well for safe working condition. If the ladder is used for carrying materials as well, suitable foot holds and handholds shall be provided on the ladder. Ladders shall not be used for climbing carrying materials in hands. While climbing both the hands shall be free. Ensure positioning of person at base / grade level while it is in use. All ladders, platforms, safety belts and safety nets should be inspected regularly and records should be maintained. Damaged items shall immediately be taken out of service and disposed off.
- Scaffolding staging more than 3.5 m above the ground or floor, swung or suspended from an overhead support or erected with stationary support and ladder shall conform to relevant IS specification. Timber bamboo scaffolding shall not be used.
- Working platforms of scaffolds shall have toe boards 15cms in height to prevent materials from falling down.
- A sketch of the scaffolding proposed to be used shall be prepared and approval of the contractorôs Safety Officer obtained prior to start of erection of scaffolding. All scaffolds shall be examined and certified with proper display by contractors Safety Officer before use.
- Safe means of access shall be provided to all working platforms and other elevated working places. Every ladder shall be securely fixed. No single portable ladder shall be over 9m in length. For ladders upto 3m in length the width between side rails in the ladder shall in no case be less than 300mm. For longer ladders this width shall be increased by atleast 20mm for each additional metre of length. Step shall be uniform and shall not exceed 300mm.
- Working platform and gangway along the side of pipe racks shall be provided. Under no circumstance the contractor employees should step on pipes at pipe racks.

EXCAVATION, TRENCHING AND EARTH REMOVAL :

- A Work Permit must be taken for any excavation or earth removal inside the existing refinery premises from Engineer In-Charge MRPL, as the area of construction work has underground pipelines, cables etc.

- All trenches 1.2m or more in depth shall at times be supplied with at least one ladder for each spacing of 3.0m in length or fraction thereof. Ladder shall be extended from bottom of the trench to at least 1m above the surface of the ground.
- The sides of the trench which are 1.2m or more in depth shall be stepped back to give suitable slope (angle of repose) or securely held by timber bracing (i.e. shoring of the excavated trench or pit should be done), so as to avoid the danger of sides from collapsing. The excavated material shall not be placed within 2m of the edges of the trench or half of the depth of the trench, whichever is more. Cutting shall be done from top to bottom. Under no circumstances under-cutting shall be done.
- The contractor shall ensure the stability and safety of the excavation, adjacent structures, services and the works.
- Open excavations shall be fenced off by railing (ledger pipes) and warning signals installed at well-lit places so as to prevent persons falling into the excavations.
- All blasting operations shall be carried out on the basis of procedures approved by Inspector of explosives. All works in this connection shall be carried out as per IS code of practice. Barricades, Warning signs etc. shall be placed on the roads / open area. Prior approval of such operation shall be obtained from Engineer-In-Charge of works. The blasting procedure being followed by the contractor must be submitted with MRPL engineer in-charge.
- The contractor must submit the methodology, safety aspects, schedule, License and other relevant features of control blasting operations.
- Wherever manual removal of earth is involved, earth shall be removed from the top by maintaining the proper slope equal to the angle of re-pose of the earth. Manual removal of earth / lowering of person in a pit should be done with tripod and pulley besides use of Safety belt by person.
- Such work shall be constantly supervised by the contractorôs responsible persons.

DEMOLITION :

Before any demolition work is commenced and also during the progress of the work :

- Proper approvals shall be taken from Engineer in-Charge MRPL before commencing demolition.

- Area around shall be barricaded with cautionary signs and posting of security guards or supervisors for preventing unauthorised entries of personnel.
- All roads and open area adjacent to the work site shall either be closed or suitably protected. Appropriate warning signs shall be displayed for cautioning approaching persons.
- No floor, roof or other part of the building shall be overloaded with debris or materials as to render it unsafe.
- Entries to the demolition area shall be restricted to authorized persons only.

Contractor to place separate collection facility of waste like metal, on metal non degradable and bio degradable wastes and shall dispose to designated place daily basis.

Contractor shall be responsible to clear dry grass and wooden items etc from and around his construction site/storage/fabrication yard etc to prevent any fire accidents.

PERSONAL PROTECTIVE EQUIPMENTS :

- All proper ñISIò marked Personal Protective Equipments (PPEs) as considered necessary by the Engineer-In-Charge shall be kept available by contractor for the use of the persons employed on the site and maintained in a condition suitable for immediate use. Also the contractor shall take adequate steps to ensure proper use of equipment by those concerned. The PPEs are to be provided by the contractor.
- All persons employed at the construction site shall use safety helmets and safety shoes and goggles as minimum safety gears. For other types of works, persons working in that area shall also use the required PPEs, as advised by the Engineer-In-Charge of MRPL .
- Workers employed on mixing asphaltic materials, cement and lime mortars shall use Gumboots, safety goggles, hand gloves and proper respirator.
- Persons engaged in welding and gas-cutting works shall use suitable welding face shields. The persons assisting the welders shall use suitable goggles. Protective goggles shall be worn while chipping and grinding.
- Stonebreakers shall use protective goggles. They shall be seated at sufficiently safe intervals of distance.

- Persons engaged in or assisting in shot blasting (Sand blasting is prohibited) operations and cleaning the equipment after shot blasting shall use suitable gauntlets, overalls, dust mask, dust proof goggles, safety shoes and protective hood supplied with fresh air.
- All persons working with 3M lifeline and hook at height above ground or floor and exposed to risk of falling down shall use safety belts which should be properly secured to solid object (ISI marked) unless otherwise protected by cages, guard railings, etc. In places where the use of safety belts is impractical, suitable safety net of adequate strength fastened to substantial supports shall be employed under proper valid permit.
- When workers are employed in sewers and inside manholes, which are in use, the contractor shall ensure that the manholes are opened and are adequately ventilated at least for an hour. The atmosphere inside the space shall be checked for the presence of any toxic gas or oxygen deficiency and recorded in the confined space entry permit, availability of standby person at manhole must be ensured before the personnel are allowed to get into the man-holes. The manholes opened shall be cordoned off with suitable railing and provided with warning signals or caution boards or barricade tape to prevent accidents. There shall be proper illumination in the night.

PAINTING :

- Respirators shall be provided by the contractor for use when paint is applied, safety of personnel in vicinity also should be considered while painting.
- Overalls shall be supplied by the contractor to the workmen and adequate facilities shall be provided to enable the painters for decontamination at the cessation of work.
- All solvent-based paints, thinners shall be stored in separate storage kept under proper surveillance.
- Smoking, open flames or sources of ignition shall not be allowed in places where paints and other flammable substances are stored, mixed or used. A caution board, with the instructions written in national / regional language, ñSMOKING ï STRICTLY PROHIBITEDò shall be displayed in the vicinity where painting is in progress or where paints are stored. Symbols shall also be used for caution boards.

- Suitable IS marked First Aid Fire Fighting equipments shall be kept available at a place where flammable paints are stored, handled or used.
- When painting work is done in a closed room or in a confined space, adequate ventilation shall be provided. Workers shall wear suitable supplied air type breathing apparatus. Work shall be carried out under a valid work permit.
- Epoxy resins and their formations used for painting shall not be allowed to come in contact with the skin. The workers shall use PVC gloves and / suitable barrier creams.
- Adequate ventilation shall be provided especially when working with hot resin mixes.
- Increased personal hygiene shall be practiced to control inadvertent contact with the resin and eliminate its effects.
- Workers shall thoroughly wash hands and feet before leaving the work. Work clothes shall be changed and laundered frequently.
-Care must be taken while carrying out painting inside confined space. There shall be safety devices to monitor the personnel working inside confined space like vessels during painting of internal surface. Suitable painting methods shall be adopted as specified elsewhere.

LIFTING MACHINES TOOLS AND TACKLES :

- Supplierôs / Manufacturerôs manual for operations / safety / periodical maintenance of all Cranes, winches, JCBs, Poclains, Excavators, Trucks, tractors, Vehicles, etc. MUST be made available at site from the moment it is brought at site and the same should be strictly adhere to.
- Lifting machines, tools and tackles shall be of good mechanical construction, sound material, adequate strength, free from any defects and shall be kept in good working condition.
- Lifting machines, tools, tackles, equipments etc. to have identification tags of steel plate of size 2òx 2ò tied to it using steel wire of 4 mm size. The details like reference number, Safe Working Load (SWL), date of testing etc. to be punched on this plate.
- Contractor must produce Competent Authorityôs (Authorised by The Directorate of Factories, Karnataka state) Certificate of testing in the prescribed form of Lifting Machines, Chains, ropes and lifting tackles well in advance. Only valid Lifting Machines, tools etc. to be used and to be re-certified before expiry of certificate. Also, these equipments will be inspected by Engineer In-

Charge of MRPLas and when required. The same procedure is applicable for all other Electrical Equipments, tools, machines, D.G sets, compressors, etc.

Lifting equipments for testing by competent authority to include JCB, Poclain, Excavators, etc.

The ringer crane to be tested and certified every time by Competent Person it is dismantled and reassembled. This certification must also include stability of soil on which it is assembled.

Use of Hydra is not permitted inside refinery/construction premises. Hydraulically jacked lifting machines to be used.

- Lifting machines, tools, tackles, equipments etc. to be inspected in addition to the Competent Authorityôs certification. This should be done fortnightly by experienced trained mechanical foreman and technicians and record of such inspection to be maintained.
- Every rope and sling used in hoisting or lowering of materials or as a means of suspension shall be of good quality and adequate strength and free from any defect.
- Every crane operator or lifting appliance operator shall have a driving License for Heavy Vehicle, proper physical fitness such as eye sight etc. and with adequate experience. No persons under the age of 21 years shall be in charge of any hoisting machine or give signal to operator of such machine.
- In case of every lifting machine (and of every chain, ring, hook, shackle, swivel and pulley block used in hoisting or as means of suspensions) the safe working load shall be ascertained and clearly marked. In case of a lifting machine having a variable safe working load, each safe working load and the conditions under which it is applicable shall be clearly indicated. No part of any machine or any gear referred to above in this paragraph shall be loaded beyond the safe working load.
- The contractor shall notify the safe working load of the machine to the Engineer-In- Charge whenever he brings any machinery to site for work and get it verified by the Engineer-In-Charge, supported by a valid test certificate by the competent person.
- Motors, gearing transmission, couplings, belts, chain drives and other moving parts of hoisting appliances shall be provided with adequate safeguards. Hoisting appliances shall be provided with such means as to reduce to the minimum risk of any part on a suspended load becoming accidentally displaced or lowered.

- The contractor must have a team of Experienced Mechanical Personnel (having minimum of 5 yrs. experience in carrying out safety inspection and testing of Lifting machines, Tools and Tackles etc.), to conduct periodical (Daily, fortnightly, monthly and quarterly) inspection and testing of Lifting machines, Tools and Tackles and to maintain its records.
- Crane shall not be used as hoist. Incase cranes are used as hoist then factory Inspectorôs permission to be taken in advance and to be subject to biannual testing by competent person as required for hoist under Factories Act 1948. Also, the design of cage to be got approved by the competent person well in advance. Two ropes or chains to be provided to the cage, separately connected with the cage, suspended independently and capable of carrying the whole weight of the cage.
- Contractor to maintain operation, inspection and maintenance logs for every lifting equipment, tool and tackle.

TEMPORARY SHEDS :

- Before erecting temporary shelters like sheds or tents anywhere at site, written permission of the concerned Engineer In-charge must be obtained.
- Temporary sheds for site office should be avoided. Instead contractor shall arrange for portal cabins for site office / stores.
- Temporary shed should not be erected using scaffolding pipes. Te shed should be made of safe construction material.
- The temporary shed should be erected after proper designing following engineering design practices in conformance with normal safety standards to ensure the stability and safety.
- Temporary shed should bear the contractor's name.
- Temporary piping, hose connections and electrical wiring to these temporary sheds must be laid in such manner that they do not cause tripping, hitting or electrocution hazards.

ERECTION :

- At the planning stage consideration should be given, by those responsible for the design, to the safety of the workers who will subsequently be employed in the erection of such structures. A detailed erection scheme / schedule shall be furnished well in advance for all the critical erections.

- Care should be exercised by design engineers and other professional persons, not to include anything in the design which would necessitate the use of unwarrantably dangerous structural procedures and undue hazards, which could be avoided by design modifications.
- Facilities should be included in the design for such work to be performed with the minimum risk.
- Detailed Safety Procedure should be submitted as a part of Heavy Equipment erection scheme. Heavy Equipment erection scheme must be submitted at least one month in advance.
- Erection engineer to conduct training on rigging before every heavy lift / erection for crane operator, foreman and riggers.
- Erection of structural platforms, gratings and hand rails to be done on priority. The procurement of gratings, structural members for hand rails to be done on priority.
- Prefabricated parts should be so designed and made that they can be safely transported and erected.
- As far as practicable the safety of prefabricated parts while erection should be ensured by appropriate means, such as provision and use of :

a) Ladders;
b) Gangways;
c) Fixed platforms;
d) Platforms, Buckets, boatswainôs chairs, etc. suspended from lifting appliances;
e) Safety belts and lifelines; and
f) Safety nets or catch platforms.

- Ladders to be inspected fortnightly by experienced trained mechanical foreman and mechanical technicians and record of such inspection to be maintained.
- The boatswainôs chairs/ platforms used in structural erection to be inspected and checked once in fortnight and record maintained.
- In addition to the conditions of stability of the part when erected, when necessary to prevent danger the design should explicitly take into account:

a) the conditions and methods of attachment in the operations of stripping, transport, storing and temporary support during erection; and

b) Methods for the provision of safeguards such as railings and working platforms, and, when necessary, for mounting them easily or prefabricated parts.

- The hooks and other devices incorporated in prefabricated parts that are required for lifting and transporting them should be so shaped, dimensioned and positioned as:

a) to withstand with a sufficient margin the stresses to which they are subjected; and

b) not set up in the part stresses that could cause failures, or stresses in the building not provided for in the plans.

- Prefabricated parts made of concrete should not be stripped before the concrete has set and hardened sufficiently to ensure the safety of the operation.

- Store places should be so constructed that:

a) There is no risk of prefabricated parts falling or overturning; and

b) Storage conditions generally ensure stability having regard to the method of storage and atmospheric conditions.

- Prefabricated parts made of concrete should not be erected before the concrete has set and hardened to the extent provided for in the plans.

- While they are being stored, transported, raised or set down, prefabricated parts should not be subjected to stresses prejudicial to their stability.

- Trailers only to be used for transportation of pipes. Crane to be used for erection at site.

- Every lifting appliance should :

a) be suitable for the operation; and

b) be approved by a competent person, or tested under a roof load 20 percent heavier than the heaviest prefabricated part.

c) Ringer mode of a heavy crane MUST be inspected, checked and certified by competent person every time it is dismantled and erected. The report must bear the stability of the soil on which it is erected.

- Lifting hooks should have the maximum permissible load marked on them.

- Tongs, clamps and other appliances for lifting prefabricated parts should :

a) be of such shape and dimensions as to ensure a secure grip without damaging the part ; and

b) be marked with the maximum permissible load in the most unfavourable lifting conditions.

- Prefabricated parts should be lifted by methods or appliances that prevent them from spinning accidentally.

- The temporary basket cages / Platforms / Buckets / boatswainôs chairs, etc. used for lifting / working at height suspended from lifting appliances or suspended from structures or beams MUST be certified by competent person and provisions or conditions as stipulated during certification to be adhere to.

- While prefabricated parts are being lifted measures should be taken to prevent workers from being struck by objects falling from a height and area around such site should be barricaded with cautionary signs.

- When necessary to prevent danger, before they are raised from the ground, prefabricated parts should be provided with safety devices such as railings and working platforms to prevent falls of persons.

- If workers are exposed to danger when releasing prefabricated parts from lifting appliances, adequate safety measures should be taken.

- At workplaces adequate instructions should be given to the workers on the methods, arrangements and means required for the construction, storage, transport, lifting and erection of prefabricated parts.

- When it is not practicable to install protective guardrails and toe boards the workers should be provided with and use safety belts and lifelines to limit the height of the fall.

- Overhead screens to be provided to prevent workers from being struck by falling objects.

- The safety devices (guard-rails, toe-boards, safety belts and lifelines) should not be removed so long as the risk remains.

- Precautions should be taken to prevent fires being caused by rivet-heating equipment.

- Rivet heaters should extinguish their fires before leaving work.

- Extra care should be taken to prevent fall of objects, tools, etc. from height.

- Before structural steel parts are lifted, care should be taken that any object that could fall is fastened or removed.

- Structural steel parts should not be dragged while being lifted if that could cause danger.

- Steel trusses that are being erected should be adequately shored, braced or guyed until they are permanently secured in position.
- While structural members are being moved into place the load should not be released from the hoisting rope until the members are securely fastened in place.
- Structural members should not be forced into place by the hoisting machine while any worker is in such a position that he could be injured by the operation.
- No load should be placed on open-web steel joists until they have been placed in position and secured.
- Erection of pipes to be done using web belts only. Web belts must be inspected and checked fortnightly internally by the contractor and records maintained. Damaged ones to be cut to pieces and record to be maintained.
- Nipples and other accessories used for hydrotest and subject to high pressures to be inspected, checked and tested by experienced trained mechanical foreman and mechanical technicians and records maintained. Damaged parts to be replaced immediately with the new ones.
- Discarding criteria of web belts to be procured from the supplier / manufacturer by the contractor and submitted to MRPL / Project consultant.

WORK ON TALL CHIMNEYS :

SCAFFOLDS :

- All workmen should be certified medically fit by medical practitioner before working at height. Mock up drills MUST be conducted by the contractor for all these workmen and issue Working at Height passes to only those who has experience of working at height, is declared medically fit and shows confidence during mock up drills.
- For the erection and repair of tall chimneys and vertical structures scaffolding should be provided. Scaffolds after erection should be certified by competent mechanical engineer for its strength before use and be displayed with a tag ñCertified for useò.

-Scaffolds should confirm to relevant standards.

- Fixed inside scaffolding should be securely anchored in the chimney wall.

- The scaffold floor should always be at least 65 cm (26 in) below the top of the chimney.

- Under the working floor of the scaffolding the next lower floor should be left in position as a catch platform.

- Suspended outside platform (inspection scaffolds) should be provided as per the relevant standards as stated above.

- Use of Catch platforms, stairs, ladders and Iron rung, lifting tools, tackles and work with hot asphalt, tar should be carried out as per the procedures outlined in relevant ILO manual.

- Safety belts with lifelines (of various sizes 2ô, 5ô and 9ô double lanyards) and safety nets being used should confirm to relevant standards and are to be inspected, tested, periodically and records be maintained. Damaged safety belts and nets should be discarded, taken out of service and disposed off.

- Safety belts must be used while working at height. The life lines (lanyard) MUST be tied to firm support. Incase of absence of firm support provision of wire rope of adequate size tied with lifting tackles to be made to tie the safety belt life line (lanyard).

- All Safety belts to be inspected once in a month and damaged ones to be discarded. Suppliers / Manufacturers Discarding criteria of safety belts to be submitted to MRPL. The record of inspection and the results to be maintained. And a copy to be submitted to owner / Project consultant.

- The scaffolds to be inspected and certified by the competent mechanical Engineer before use and subsequently, at least once in a week.

Safety of Electrical works:

Before starting work in live electrical panels, proper electrical isolation shall be ensured. The same to be inspected by the electrical in charge and necessary isolation tag shall be attached.Proper electrical isolation permit system along with LOTO system shall be maintained by the contractor.Triplicate copy of such permits shall be submitted to project consultant/MRPL.

CATCH NETS :

- Where workers cannot be protected against falls from heights by other means they should be protected by catch nets.
- Catch nets should be made of good quality fiber cordage, wire or woven fabric or material of equivalent strength and durability.
- The perimeter of catch nets should be reinforced with cloth-covered wire rope, manila rope or equivalent material.
- Catch nets should be provided with adequate means of attachment to anchorage.
- Catch nets to be inspected fortnightly, tested and records maintained. Damaged safety nets should be discarded and record maintained.

PROTECTION AGAINST MOVING VEHICLES :

Workers who are regularly exposed to danger from moving vehicles should wear;

a) distinguishing clothing, preferably bright yellow or orange in colour; or

b) devices of reflecting or otherwise conspicuously visible material.

HANDLING MATERIALS :

- Mechanical means should be provided and used for lifting and carrying loads.
- Personnel should have knowledge of safe ways of material handling.

STACKING AND PILING :

- Materials and objects should be so stacked and unstacked that no person can be injured by materials or objects falling, rolling, overturning, falling apart or breaking.
- Area earmarked for stacking and piling should be barricaded and only authorised personnel be allowed to carry out stacking and piling jobs.
- Proper stacking and piling should be done as per the guidelines of ILO.

WELDING AND GAS CUTTING :

- Welding and gas cutting operations shall be done only by qualified and authorised persons and as per IS specification and code of practice.
- All the hoses used on compressed gas cylinders (Acetylene, Oxygen etc.) to be as per IS.
- Welding and gas cutting shall not be carried out in places where flammable or combustible materials are kept and where there is danger of explosion due to presence of flammable / gaseous mixtures.
- Welding and gas cutting equipments including hoses and cables shall be maintained in good condition.
- Barriers shall be erected to protect other persons from harmful rays from the work. When welding or gas cutting is done in elevated positions, precautions shall be taken to prevent sparks or hot metals falling on persons or flammable materials.
- Use of proper PPEs by personnel involved in Gas cutting / Electric Arc welding should be ensured. Use of Welders Helmet with face shield by the welders is a MUST.
- Fire extinguisher shall be available near the location of welding operations. Valid permit shall be obtained before flame cutting / welding is taken up.
- Contact of personnel with the electrode or other live parts of electric welding equipment shall be avoided.
- Extreme caution shall be exercised to prevent accidental contact of electrodes with ground.
- The welding cables shall not be allowed to get entangled with power cables. It shall be ensured that movement of materials does not damage the cables.
- Oxy-Acetylene cylinders must be mounted on trolley with chain holding the compressed gas cylinders. The compressed gas cylinders must have pressure gauges fitted over it and Oxy-Acetylene Gas cutting set should be fitted with flash back arrestor at both the torch and cylinder ends.
- Under no circumstance the compressed gas cylinder should be taken inside the confined space or excavated pits. Hydraulic test certificates of all compressed gas cylinders should be maintained and furnished as and when required by ~~safety officer of MRPL~~.

GRINDING :

- All portable grinders shall be used only with their wheel guards in position to reduce the danger from flying fragments should the wheel break during the use.
- Grinding wheels of specified diameter only shall be used on a grinder ï portable or pedestal- in order not to exceed the prescribed peripheral speed.
- Helmet with face shield shall be used during grinding operation.

HOUSE KEEPING :

The contractor shall at times keep his work spot, site office and surroundings clean and tidy from rubbish, scrap, surplus materials and unwanted tools and equipment.

- Welding and other electrical cables shall be routed as to allow safe traffic by all concerned.
- No materials on any of the sites of works shall be so stacked or placed as to cause danger or inconvenience to any person or the public. The Engineer-In-Charge may require the contractor to remove any materials which, are considered to be of danger or cause inconvenience to the public.
- At the completion of the work, the contractor shall have removed from the work premises all scaffoldings, surplus materials, rubbish and all huts and sanitary arrangements used / installed for his workmen on the site.
- House keeping of the workplace shall be done strictly by the Contractor on daily basis or as required by the Engineer-in-charge. Contractor to collect all debris/ scrap and dump at designated Scrap Yard as defined by MRPL authorities.
- A separate house keeping team to be formed and made available round the clock.

FIRE SAFETY :

- Adequate number of duly calibrated Explosimters, Oxygen meters, Hydrogen Sulphide detectors (Portable / Fixed) or any other multiple gas detector should be made available at site by the contractor.
- Quantities of combustible materials like timber, bamboos, paints etc. shall be minimum required in order to avoid unnecessary accumulation of combustibles at site.

Containers of paints, thinners and allied materials shall be stored in a separate room, which shall be well ventilated, and free from excessive heat, sparks, flame or direct rays of the sun. The

containers of paint shall be covered or properly fitted with lid shall not be kept open except while using.

- Fire extinguishers as approved by Engineer-In-Charge shall be located at the construction site at appropriate places.

- Adequate number of contract workmen shall be given education and training in fire fighting and extinguishing methods.

WORK PERMIT SYSTEM :

- MRPLôs Work Permit system to be strictly followed.

- All jobs within refinery (for tie-in etc.) should be executed with a safety work permit only. These will be issued by the concerned operating personnel of MRPL (Refinery Shift Manager or any authorised person). However, he can withdraw the permit when the stipulated conditions are not complied with at the work spot.

- Area is okay for performing the Work.

Responsibility of Performing Authority :

To obtain an approved Work Permit duly filled and signed by authorities as per the MRPLôs Work Permit System before starting the work in the area.

- To visit job sites and ensure that it is prepared accordingly.

- The person performing the job shall be in possession of the permit till the completion of the job. The permit should be produced for inspection at any time. As far as possible the Work Permit should be displayed at job site in the plastic folder.

- To understand the scope of the work and implications involved.

- To restrict the work to the area / equipment specified in the work permit.

- To comply with the instructions given on the Work Permit.

- To follow Plant Safety Rules and Procedures.

- To be alert at all times for the development of unexpected situations.

To stop the work immediately on detecting any unsafe condition and promptly inform the Issuing Authority.

- To return the Permit duly signed after completion of the job to the Issuing Authority. Contractor must adhere to work permit system and other safety regulations for activities at places other than construction site.

WORK IN AND AROUND WATER BODIES :

When the work is done near any place, where there is a risk of drowning, all necessary rescue equipment such as life buoys and life jackets shall be provided and kept ready for use and all necessary steps taken for prompt rescue of any person in danger and adequate provision shall be made for prompt first-aid treatment of all injuries likely to be sustained during the course of the work. Persons who do not know swimming shall not be engaged alone for any work where risk of drowning exists. Sufficient number of life buoys or life jackets shall be provided.

PUBLIC PROTECTION :

The contractor shall make all necessary provisions to protect the public. He shall be bound to bear the expenses for defense of every action or other proceedings of law that may be brought by any person for injury sustained owing to neglect of any precaution required to be taken to protect the public. He shall pay the damage and cost which may be awarded in any such suit, action or proceedings to any such person, or the amount which may be fixed as a compromise by any such person.

OTHER STATUTORY PROVISIONS :

Notwithstanding the above clauses there is nothing in these to exempt the contractor from the provisions of any other Act or Rules in force in the Republic of India. In particular all operations involving the transport, handling, storage and use of explosives shall be as per the standing instructions and conform with Indian Explosives Act, 1884 and the explosives Rules, 1983. The Factories Act 1948 and The Karnataka Factories Rules, 1969, Handling, transport, storage and use of Compressed gas cylinders and Pressure vessels shall conform with the Gas Cylinders rules 1981 and Static and Mobile pressure Vessels (Unfired) Rules 1981. In addition, The Building and other construction workers (Regulation of Employment and conditions of service) Act 1996, The Indian

Electricity Act, 1910 and Indian Electricity Rules 1956, The Atomic Energy Act 1962, The Radiation Protection Rules 1971, Radiation Protection Manual of Nuclear Facilities and the Atomic Energy (Factories) Rules 1988 and various rules and Act relevant to the activities being performed shall also be strictly complied with.

- No Child labour should be brought in for work.

- MRPL holds the right to issue warnings / Heavy penalties (monetary fine) / suspend work at any time or terminate the contract for a loss / damage and a pattern of frequent failure to adhere to Safety Laws, regulations and Onsite Safety procedures. In general a heavy monetary fine will be deducted straight from the contractorôs bill for each violation of Safety Rules / Unsafe Act / Unsafe Condition observed, for each First-Aid injury, for each Lost Time injury / Near Miss Accident and for each fatality.

GUIDELINES AND GENERAL PROCEDURES FOR SUPPLY AND USE OF ELECTRICITY AT SITE :

Following safety requirements shall be complied with before the contractor uses the power supply.

- The contractor shall submit a list of licensed electrical staff to be posted at site.

- It shall be the responsibility of the contractor to provide and maintain complete installation on the load side of the supply point with regard to the safety requirements at site. All cabling and installation shall comply with the appropriate statutory requirements given below and shall be subject to approval of the Departmental Engineer-In-Charge / Electrical Engineer.

(a) Indian Electricity Act, 1910

(b) Indian Electricity Rules, 1956

(c) National Electric code, 1985

(d) Other relevant rules of Local bodies and Electricity Boards.

- Where distribution boards are located at different places the contractor shall submit schematic drawing indicating all details like size of wires, overhead of cable feeders, earthing etc. The position and location of all equipment and switches be given.

- The contractor shall make his won arrangements for main earth electrode and tapings thereof. The existing earth points available at site can be used at the discretion of the Departmental

Electrical Engineer with prior permission. Method of earthing, installation and earth testing results shall conform to relevant I.S. Specifications.

- Overhead High Tension (HT) cable routes to be marked and physically barricaded to prevent crane coming in contact with it.

-All three-phase equipment shall be provided with double earthing. All light fixtures and portable equipment shall be effectively earthed to main earthing.

- All earth terminals shall be visible. No gas pipes and water pipes shall be used for earth connection. Neutral conductor shall not be treated as earth wire.

- Every electrically operated machine or equipment to be independently earthed.

- Earth pits to be provided near DG sets, electrically operated machines, equipments etc.

DG sets used for construction shall be installed inside acoustic enclosure to minimise noise pollution.

Exhaust of DG sets shall be routed to safe height.

- Continuity and resistance of all earth connections to be inspected and checked and tested fortnightly and records to be maintained.

- The contractor shall not connect any additional load without prior permission of Departmental Electrical Engineer.

- Joints in earthing conductors shall be avoided. Loop earthing of equipment shall not be allowed. However, tapings from an earth bus may be done.

- The entire installation shall be subjected to the following tests before energisation of installation including portable equipment :

a) Insulation resistance test

b) Polarity test of switches

c) Earth continuity test

d) Earth electrode resistance

- The test procedures and their results shall conform to relevant IS specifications. The contractor shall submit a test report for his complete installation every 2 months or after rectifying any faulty section in the specimen test report. One such test report for the complete installation shall be submitted before onset of monsoon.

- Only persons having valid wiremanôs license shall be employed for carrying out electrical work and repair of electrical equipment installation and maintenance at site. The job shall be supervised by a qualified licensed supervisor.
- Electricians to be provided with red helmet for easy identification.
- Electrical equipment and installations shall be installed and maintained as to prevent danger from contact with live conductors and to prevent fires originating from electrical causes like short circuits, overheating etc. Installation shall not cause any hindrance to movement of men and materials.
- Materials for all electrical equipment shall be selected with regard to working voltage, load and working environment. Such equipment shall conform to the relevant standards.
- The minimum clearance to be maintained for all overhead lines along roads and across roads shall be as per the statutory requirements.
- Grounding conductor of wiring system shall be of copper or other corrosion-resistant material. An extra grounding connection shall be made in appliances / equipment where chances of electric shock is high.
- Electric fuses and / or circuit breakers installed in equipment circuits for short circuit protection shall be of proper rating. It is also recommended that high rupturing capacity (HRC) fuses are used in all circuits. The Earth Leakage Circuit Breaker (ELCB) shall be provided in the circuits.
- Wherever cables or wires are laid on poles, a guard wire of adequate size shall be run along the cables / wire and earthed effectively. Metallic poles as a general rule, shall be avoided and if used shall be earthed individually. Anticlimbing guards and danger notices shall be provided on poles. Each equipment shall have individual isolating switches.
-Wires and cables shall be properly supported and an approved method of fixing shall be adopted. Loose hanging of wires and cables shall be avoided. Lighting and power circuits shall be kept distinct and separate.
-Reinforcement rods or any metallic part of structure shall not be used for supporting wires and cables, fixtures, equipment, earthing etc.

- All cables and wires shall be adequately protected mechanically against damages. In case the cable is required to be laid underground, it shall be adequately protected by covering the same with bricks, Plain Cement Concrete (PCC) tile or any other approved means.
- All armored cables shall be properly terminated by using, suitable cable glands. Multistranded conductor cables shall be connected by using cable lugs/sockets. Cable lugs shall preferably be crimped. They shall be of proper size and shall correspond to the current rating and size of the cable. Twisted connections will not be allowed.
- All cable glands, armoring and sheathing of electric cables, metal circuits and their fittings, metallic fittings and other non-current carrying parts of electrical equipment and apparatus shall be effectively grounded.
- All the Distribution Boards, switches fuse units, bus bar chambers, ducts, cubicles etc. shall have MS enclosures and shall be dust, vermin and water proof. The Distribution Boards, switches etc. shall be so fixed that they shall be easily accessible, change shall be done only after the approval of the Departmental Electrical Engineer.
- The contractor shall provide proper enclosures / covers of approved size and shape for protection of all the switchboards, equipment etc. against rain. Exposed live parts of all electrical circuits and equipment shall be enclosed permanently. Crane trolley wires and other conductors which cannot be completely insulated shall be placed such that they are inaccessible under normal working conditions.
- Iron soclad industrial type plug outlets are preferred for additional safety.
- Open type Distribution Boards shall be placed only in dry and ventilated rooms; they shall not be placed in the vicinity of storage batteries or otherwise exposed to chemical fumes.
- Isolating switches shall be provided close to equipment for easy disconnection of electrical equipment or conductors from the source of supply when repair or maintenance work has to be done on them.
- In front of distribution boards a clear space of 90cm shall be maintained in order to have easy access during emergency.
- Adequate working space shall be provided around electrical equipment, which require adjustment or examination during operation.

- As far as possible electrical switches shall be excluded from a place where there is danger of explosion. All electrical equipment such as motors, switches and lighting fittings installed in workroom where there is possibility of explosion hazard shall be explosion proof.
- All connections to lighting fixtures, starters or other power supplies shall be provided with PVC insulated, PVC sheathed twin/three/four core wires to have better mechanical protection for preventing possible damage to equipment or injury to personnel. Taped joints shall not be allowed. Electric starter of motors, switches shall not be mounted on wooden boards. Only sheet mounting or iron framework shall be used.
- All the lighting fixtures and lamp holders shall be of good quality and in good condition. Badly repaired or broken holders, etc. shall not be used.
- Only PVC insulated and PVC sheathed wires or armoured PVC insulated and sheathed cables shall be used for external power supply connections of temporary nature. Weatherproof rubber wires shall not be used for any temporary power supply connections.
- Taped joints in the wires shall not be used. Incase joints are required on electrical cables then only heat shrinkable PVC sleeves will be allowed.
- The bulbs/lamps used for illumination and testing purpose shall have cover or guard to protect them from accidental breakages. Only 24V supply system shall be used for hand lamps etc. while working inside metallic tanks or conducting vessels.
- After installation of new electric system and or other extensive extensions to existing installations, thorough inspection shall be made by Departmental Electrical Engineer before the new system or new extension is put in use.
- All persons who work with electrical installation/equipment shall be aware of the electrical hazards, use of protective devices and safe operational procedures. They shall be given training in fire fighting, first aid and artificial resuscitation techniques.
- The supervisor shall instruct the workers in the proper procedure, specify and enforce the use of necessary protective equipment such as adequately insulated pliers, screw drivers, fuse pullers, testing lamps and similar hand tools. Only wooden ladders shall be used to reach the heights in electrical work.

- No material or earthwork shall be allowed to be dumped below or in the vicinity of the bare overhead line conductors.
- Separate work permits shall be issued for individual group leaders working on the same system which shall be returned after the completion of the work to the Engineer-In-Charge.
- Before any maintenance work is commenced on electrical installations/equipment, the circuits shall be de-energised and ascertained to be dead by positive test with an approved voltage testing device. Switches shall be tagged or the fuse holders withdrawn before starting the work. Adequate precautions shall be taken in two important aspects viz.
- That there shall be no danger from any adjacent live parts and
- That there shall be no chances of re-energisation of the equipments on which the persons are working. (Tag and lock system to be strictly followed).
- While working on or near a circuit, whenever possible the use of one hand may be practiced even though the circuit is supposed to be dead. The other hand may preferably be kept in pocket.
- When it is necessary to touch electrical equipment (for example when checking for overload of motors) back of the hand may be used. Thus, if accidental shock were to cause muscular contractions, one would not ñfreezeò to the conductor.
- Operation of electrical equipment shall be avoided when standing on wet floor or when hands are wet.
- Before blown fuses are replaced, the circuit shall be locked out and an investigation shall be made for the cause of the short circuit or overload.
- When two persons are working within reach of each other, they shall never work on different phases of the supply.
- When structural repairs, modification or painting work are to be undertaken, appropriate measures shall be taken for the protection of persons whose work may bring them into the proximity of live equipment / circuit.
- It shall be ensured that the insulation and wire size of extension cords is adequate for the voltage and current to be carried.
- While tapping electricity from the socket, plug top must be used. It shall be ensured that no extension boards are over loaded while tapping. Only standard three pin plugs shall be used for

tapping electricity. Broken sockets/plugs shall be replaced immediately with good ones. Only joint free cables shall be used for connecting equipment/apparatus.

- Floors shall be kept free from trailing electrical cables to avoid tripping hazard.
- Power supply to all the machines and lighting fixture shall be switched off when not in use.
- Temporary electrical connections shall be removed as soon as the stipulated work is over. After completion of the works, the contractor shall dismantle the distribution boards and the other facilities he may have erected.
- Unauthorised tapping of power by others from distribution boards under the control of the contractor shall be prohibited at all circumstances.
- No flammable materials shall be stored in any working area near the switchboards.
- Safety work permits shall be used for switching off the main feeder and equipment by the contractor.
- ñMEN ON LINEò ñDO NOT SWITCH ONò ñDANGERò or ñCAUTIONò boards as applicable shall be used during maintenance works on the electrical equipment.

PORTABLE ELECTRICAL EQUIPMENT :

- Portable electrical tools must be examined, maintained and tested daily, fortnightly and quarterly so that the equipment and its leads are in good order. Register shall be maintained for inspection recording the testing dates and results of the equipments. Inspection checklists to be formed to that effect. The recertification of lifting tools, tackles, equipments etc. must be carried out well before the expiry of its validity period.
- All portable appliances shall be provided with three core cable and three pin plugs. The third pin of the plug shall invariably be earthed. It shall be ensured that the metal part of the equipment shall be effectively earthed.
- All connections to portable equipment or machines from the panel/distribution board/extension board shall be taken using 3 core double insulated PVC flexible copper wire in one length. No joints shall be allowed in this flexible wire. In case length of wire is not sufficient for a particular location then the supply can be tapped by providing another extension board comprising of switch and socket.

- Flexible cables for portable lamps, tools and apparatus shall be regularly examined, tested periodically and maintained to ensure safety.
- For excavations, one time clearance from electrical is required for a particular area.
- Contractor shall get their welding machine / Stress Relieving (SR) electrical equipment / all portable machine certified by MRPL / MRPL authorised contractor and seal will be fixed on machine to that effect. Certificate from third party mentioning the checks carried out, repairs carried out and safe to use to be submitted to owner /Project consultant.

Revalidation to be done once in 4 months. Incase contractor does not comply, it will be done by MRPL and four times the cost of repair will be back charged to contractor.

- Incase of welding, separate return cable from job piece to welding machine to be connected. Wires not to be used. PVC insulated cables only to be used.
- All lighting circuits/temporary connections for portable machine should have ELCB's of 30mA capacity max.
- All ELCBs to be tested once in 15 days using ELCB testers (and not by the lamp with open wires) and record maintained.
- Earthing of Neutral, which will act as return path, is not allowed.
- Electricians should have wireman license.
- During monsoons, monsoon protection for electrical equipment to be done.
- All feeders in contractor distribution panel to be clearly lettered with load details for isolation incase of emergency.
- Insulated tools like screwdriver, cutting plier, tester to be used.
- Each contractor should have one set of multimeter and tong tester.
- First aid kit to be available.
- The contractor must have a team of Experienced Electricians (having minimum of 10 yrs. experience in carrying out safety inspection and testing of Electrical Equipments, tools, portable electrical machines and appliances etc.). to conduct periodical (Daily, fortnightly, monthly and quarterly) inspection and testing of Electrical Equipments, tools and portable electrical machines, tools and appliances and to maintain its records.
- All power cable ends should have industrial plug on one side and other end directly into

the machine. (No naked end pinning into will be permitted).

- For any job within MCC / SRR a work permit will be issued by MRPL operation. Job should not be started without these permits.

ROLE OF CONTRACTOR INCASE OF EMERGENCY AND SIREN :

- Contractor shall instruct his workers to follow instructions strictly in case of fire siren / emergency or if advised or felt necessary by Engg. In-charge. If evacuation is ordered they must leave the work site and proceed towards the designated assembly point for project site, OM&S building if in Lower Plateau. The contractor and its employees MUST follow specific instructions (Roles and Responsibilities incase of fire / onsite emergency) that will be given during training from time to time. All contractor employees MUST undergo such training, before their deployment at the work site. Contractor shall arrange & conduct such trainings for his employees and also employees of sub-contractors.
- Contractor shall instruct his workers to stop all jobs immediately incase release of liquid/gas/toxic/hazardous chemicals etc, and inform the concerned MRPL personnel available at site.

TRAINING :

- The contractor to conduct Induction training of all employees and record maintained.
- The contractor will have to depute all his employees (including Engineers, supervisors and workmen), before they commence work for the first time at MRPL site and subsequently once in a year, to undergo Fire and Safety training.Their photo gate passes will be stamped after the completion of the training. If these are not stamped then they will not be allowed to enter the site premises.
- Tool box talks to be conducted every day before starting of each sift and before commencing of work after lunch break.

LIST OF PERSONAL PROTECTIVE EQUIPMENTS

The contractor must poses the following minimum safety Items cum Personal Protective

Equipments. All Personal Protective Equipments used at site to be of approved make by project consultant / Owner.

MANDATORY FOR THE CONTRACTOR EMPLOYEES WHILE WORKING AT SITE :

* Deployment of adequate nos. of safety officers as per table above and making available the mandatory items as per the minimum list below is a MUST as a part of mobilization activity.

1. Helmet.
2. Safety shoes (Conforming to IS standards with steel toe and anti-skid / acid, alkali and water proof soles).
3. Hand gloves (Leather impregnated cotton hand gloves).
4. Spectacle type goggles with toughened glass lenses, plain face shields with and without chin guards.

The contractor must use the ñISIò marked Personal Protective Equipments specific to the job .

It is mandatory to have minimum backup stock of all the PPEs in addition to what is already in use at site.

SPECIFICATIONS FOR SAFETY HELMETS-HDPE.

1) Helmet Safety Industrial HDPE white colour.
2) Contractorôs Logo at front side.
3) Conforming to IS 2925, ISI marked & DGMS approved.
4) Nape strap type adj. type 6 point adj. head band & sweat band with 3/4"Cotton Chin strap.

* Green helmets for Safety Personnel and Red helmets for electricians to be provided and used by them.

SPECIFICATION FOR SAFETY BELT

Safety belts must be double lanyard type with hook having self closing latch (spring type). Different type of hooks to be available based on the nature of job / type of support. Safety belts should be ISI marked and should conform to IS 3521 and DGMS approved and stamped.

Safety belts, safety straps, lifelines, permanent anchors and connections should both separately and when assembled :

a) be capable of supporting safely a suspended load of at least 450 kg (1,000 lb) ; and

b) have a breaking strength of at least 1,150 kg (2,500 lb).

If hooks are used for attaching safety belts to fixed anchors, they should be self closing safety hooks of various types and sizes.

When a lifeline or safety strap is liable to be served, cut, abraded or burned, it should consist of a wire rope or a wire-cored fiber rope.

Safety straps should be so fastened to safety belts that they cannot pass through the belt fittings if either end comes loose from its anchorage.

Metal thimbles should be used for connecting ropes or straps to eyes, rings and snaps. Safety belts, safety straps and lifelines should be so fitted as to limit the free fall of the wearer to 1m (3ft 3in).

SPECIFICATION FOR FALL ARRESSTOR DEVICE

Fall arresstor device with self-retracting cable integrating locking mechanism combined with an energy deception element fully automatic having cables of various lengths, ISI and DGMS and or any international approval.

SPECIFICATION FOR DUST MASK

Dust Mask made of superior quality non-aging chemical-resistant rubber half face piece with reflex sealing flaps for protection against nuisance dust, (<0.5 micron) toxic dusts, gases and vapours with replaceable filters.

SPECIFICATION FOR REPLACEABLE FILTERS

For protection against nuisance dust, toxic dusts, gases and vapours upto a concentration of 500 ppm. To be fitted on aforesaid Dust Mask.

SPECIFICATION FOR SAFETY SHOES

1. Safety Shoes, Jodhpury style- as per is 11226- 1985 with guarantee for 1& 1/2 years (all weather).
2. Acid/ alkali/ waterproof heat resistant, antiskid green PVC Nitrile sole.
3. Steel toe cap as per relevant ñISò.
4. Upper plain leather, high ankle, with metallic 4 eyelets.
5. ISI marked.
6. The supplier should give guarantee of use of safety shoes during rainy season.

STANDARD SPECIFICATION FOR PVC HAND GLOVES

Hand contoured for greater comfort & feature an embossed nonslip grip for handling wet or greasy objects cotton flock lining absorbs perspiration maximises easy on/off black with straight cuff each pair pack.

SPECIFICATION FOR ELECTRICAL PPE (SHOCK PROOF)

Hand gloves used for live electrical works shall be of proper electrical rating.

Electrical (shock proof) Safety Shoes (Jodhpury type) with acid/ alkali/ water proof, heat resistant, antiskid sole with guarantee for 1&1/2 years (all weather).

1. Upper plain leather.
2. ISI marked & latest certificate of testing from any of the govt. recognised institution for electrical resistance.
3. GUMBOOTS with steel toe should be used by personnel during rainy season.

The aforesaid guidelines are the minimum safety requirements and the contractor should exceed them so as to achieve ñZERO ACCIDENTò which is our MOTO.

PENALTY / FINE :

Heavy penalty / fine will be imposed on contractor foré

1. Any accident, near misses resulting into serious bodily injury, property damage and degradation of environment on and around MRPL.
2. Violation of standard safety practices, norms and Rules, carelessness and negligence.
3. Violation of proper use of PPEs by workmen.
4. Lack of supervision.
5. Violation of work permit procedures at construction site and process plant areas.
6. Improper planning of critical jobs if resulted into Accident, Injury or Fire.
7. Failure to take corrective actions as advised by Engineering In-charge or Safety Officer.
8. Frequency or Severity Rate of Accident is found to be high.
9. Improper planning of activity / ies if results into nearmiss and bodily injury to personnel.
10. Unauthorised entries into process plant areas.
11. Horseplay.
12. Failure in taking corrective actions on unsafe conditions / acts as and when noticed and advised by Engineer In-Charge or ~~Safety Officer of MRPL~~.
13. Misuse of Fire Prevention / Protection and safety equipments.
14. Personnel working under intoxication.
15. Smoking.
16. Deployment of child labours.
17. Penalty charges are as below

Fatality:INR 20,00,000/-

Permanent disability:INR 15,00,000/-

Major injury: INR 10,00,000/-

Minor injury with absence to duty after accident: INR 10,000/- per day of absence due to injury or max INR 5,00,000/-

For safety violation:INR 10,000/- per violation.

For not wearing PPE: INR 5,000/- per case.

Consumption of alcohol and any other intoxicating material shall be also treated as safety violation and heavy penalty of INR 10000/- shall be levied on the main contractor per person consumed.

****

VOLUME - II: TECHNICAL SECTION

4 - APPROVED VENDOR LIST

TABLE OF CONTENTS

1.0 VENDOR LIST

2.0 APPROVED VENDOR LIST OF CIVIL

3.0 APPROVED VENDOR LIST OF MECHANICAL

VENDOR LIST

Bidder shall purchase / supply of the required items/materials only from approved Vendor list provided with the Bid document subject to meeting the tender specification & site requirements. Contractor will be responsible to ensure the quality of products listed in approved list of vendor.

Bidder shall get prior approval from consultant /owner for any required item which is not covered in the referred list.

4.1 APPROVED VENDOR LIST OF CIVIL

All the materials shall be got approved by Engineer in-charge prior to their use.

SL. No	NAME OF MATERIAL	APPROVED MAKE
01	Cement	ACC, Birla super, Ambuja, Ultra tech
02	Reinforcement	TATA, SAIL, VIZAG (RINL)
03	Acrylic emulsion paints / Distempers / Synthetic enamel paint	Asian, Berger, Dulex, Nerolac
04	Water proofing / Construction chemical admixture	BASF, Pedelite, Fosroc
05	Paver block	Aeons, Hicon, Malu, Vibrant besser, Basant Paver
06	PVC/ UPVC/ CPVC Pipe & Fittings	Supreme, Prince, Finolex, Ashirvad, Astral
07	Rolling shutter	Avians, JaibharaniEngg.,S risai Ganesh Structurals, Nayak rolling shutter, precession engineering works, Gandhi Automations Pvt Ltd, Shakti Hormann Pvt. Ltd.
08	Zincalume / Galvalume Sheet	Jindal, JSW, Tata Bluescope, Kirby, Hindalco, Crill
09	Polycarbonate Sheet	Tuflite, Lexan, Gallina
10	Structural steel works	SAIL, VIZAG (RINL), TATA
11	Turbo ventilator	Dura Plast, Power Chemplast, sungreen Ventilator system and Rooftec.
12	Aluminum ventilator window.	Hindalco/Jindal

Note:

a) Above maker of materials are approved subject to meeting the tender specification & site requirement.

b) The sample of the materials shall in either case have to be got approved from Engineer in charge before procurement.

c) Material where no make/brand has been mentioned, in that case ISI marked sample shall be submitted by the contractor for approval of Engineer in charge.

d) For any item not covered in the list, the contractor shall get the make & sample approved from EIC before procurement. The final choice of make to be used in the works will rest with MRPL & the decision of EIC shall be final & binding on the contractor in this respect.

e) Contractor will be responsible to ensure the quality of products listed in approved list of makes/brands. Contractor will have to replace the defective & sub-slandered materials at his own cost.

4.2 APPROVED VENDOR LIST OF MECHANICAL

SL NO	ITEM / VENDORS	COUNTRY
1.0	**EXPANSION JOINT (METALLIC) - IMPORTED**	
1	BROCKINGTON & SCOTT LTD	U.K.
2	EJS ASIA PACIFIC PTY LTD	U.S.A.
3	FLEXIDER S.R.L	ITALY
4	HEITZ GMBH	GERMANY
5	IWKA BKT GMBH	GERMANY
6	JORD BELLOWS PTY LIMITED	AUSTRALIA
7	MUNRO & MILLER FITTINGS LTD	U.K.
8	NORDON INDUSTRIES	FRANCE
9	SENIOR FLEXONICS PATHWAY	U.S.A.
10	U.S BELLOWS INC.	U.S.A.
11	WITZENMANN GMBH	GERMANY
2.0	**EXPANSION JOINT-(FABRIC)**	
1	KE BURGMANN FLEXIBLES INDIA PVT LTD	INDIA
2	KELD ELLENTOFT INDIA PVT LTD	INDIA
3	URJA PRODUCTS PVT. LTD.	INDIA
3.0	**EXPANSION JOINT-METALLIC**	
1	LONESTAR INDUSTRIES	INDIA
4.0	**EXPANSION JOINTS (RUBBER)**	
1	CORI ENGINEERS PVT LTD	INDIA
2	MIL INDUSTRIES LIMITED	INDIA
3	RUBBER PRODUCTS PVT LTD	INDIA
4	SRM EXOFLEX PVT. LTD.	INDIA
5.0	**EXPLOSION CLADDING**	
1	EXPLOFAB METALS (INDIA) PVT. LTD.	INDIA
2	GIRIDHARI EXPLOSIVES PVT.LTD.	INDIA
6.0	**FASTENERS**	
1	AEP COMPANY	INDIA
2	BOLTMASTER INDIA PVT LTD	INDIA
3	DEEPAK FASTENERS LIMITED	INDIA
4	FASTENERS & ALLIED PRODUCTS PVT LTD.	INDIA
5	HARDWIN FASTENERS PVT LTD.	INDIA
6	J.J.INDUSTRIES	INDIA
7	MULTI FASTENERS PVT LTD	INDIA
8	NEXO INDUSTRIES	INDIA
9	OME METALLURGICA ERBESE S.r.l.	ITALY
10	PACIFIC FORGING & FASTENERS PVT LTD	INDIA
11	PIONEER NUTS & BOLTS PVT LTD	INDIA
12	PRECISION AUTO ENGINEERS	INDIA

SL NO	ITEM / VENDORS	COUNTRY
13	PRECISION ENGG. INDUSTRIES	INDIA
14	PRESIDENT ENGINEERING WORKS	INDIA
15	SANDEEP ENGINEERING WORKS	INDIA
7.0	**FITTING BLOCK FORGED- ALLOY STEEL**	
1	CSA FITTINGS	INDIA
2	EBY FASTENERS	INDIA
3	M.S. FITTINGS MFG. CO PVT LTD	INDIA
8.0	**FITTING BLOCK FORGED- CARBON STEEL**	
1	CSA FITTINGS	INDIA
2	EBY FASTENERS	INDIA
3	LEADER VALVES LTD	INDIA
4	M.S. FITTINGS MFG. CO PVT LTD	INDIA
5	R.N.GUPTA & CO. LTD	INDIA
9.0	**FITTING BLOCK FORGED- STAINLESS STEEL**	
1	CSA FITTINGS	INDIA
2	EBY FASTENERS	INDIA
3	M.S. FITTINGS MFG. CO PVT LTD	INDIA
10.0	**FITTINGS FABRICATED FROM PLATE- A.S.**	
1	SIDHARTH & GAUTAM ENGINEERS	INDIA
2	TUBE PRODUCTS INCORPORATE	INDIA
11.0	**FITTINGS FABRICATED FROM PLATE- C.S.**	
1	DEE DEVELOPMENT ENGINEERS LIMITED	INDIA
2	GUJRAT INFRAPIPES PVT. LIMITED	INDIA
3	SIDHARTH & GAUTAM ENGINEERS	INDIA
4	TUBE PRODUCTS INCORPORATE	INDIA
12.0	**FITTINGS FABRICATED FROM PLATE- CLADDED**	
1	TUBE PRODUCTS INCORPORATE	INDIA
13.0	**FITTINGS FABRICATED FROM PLATE- S.S.**	
1	GUJRAT INFRAPIPES PVT. LIMITED	INDIA
2	SIDHARTH & GAUTAM ENGINEERS	INDIA
3	TUBE PRODUCTS INCORPORATE	INDIA
14.0	**FITTINGS FROM SEAMLESS PIPE- ALLOY STEEL**	
1	EBY INDUSTRIES	INDIA
2	EFTEN ENGINEERING PVT. LTD.	INDIA
3	SIDHARTH & GAUTAM ENGINEERS	INDIA
4	TEEKAY TUBES PVT LTD	INDIA
5	TUBE PRODUCTS INCORPORATE	INDIA
15.0	**FITTINGS FROM SEAMLESS PIPE- S.S.**	
1	DEE DEVELOPMENT ENGINEERS LIMITED	INDIA
2	EBY INDUSTRIES	INDIA

SL NO	ITEM / VENDORS	COUNTRY
3	GUJRAT INFRAPIPES PVT. LIMITED	INDIA
4	M.S. FITTINGS MFG. CO PVT LTD	INDIA
5	SIDHARTH & GAUTAM ENGINEERS	INDIA
6	TEEKAY TUBES PVT LTD	INDIA
16.0	**FITTINGS FROM SEAMLESS PIPE-CARBON STEEL**	INDIA
1	CSA FITTINGS	INDIA
2	DEE DEVELOPMENT ENGINEERS LIMITED	INDIA
3	EBY INDUSTRIES	INDIA
4	EFTEN ENGINEERING PVT. LTD.	INDIA
5	GUJRAT INFRAPIPES PVT. LIMITED	INDIA
6	M.S. FITTINGS MFG. CO PVT LTD	INDIA
7	SIDHARTH & GAUTAM ENGINEERS	INDIA
8	TEEKAY TUBES PVT LTD	INDIA
9	TUBE PRODUCTS INCORPORATE	INDIA
17.0	**FITTINGS PIPE CAP UPTO 24" - C.S.**	
1	CSA FITTINGS	INDIA
2	DEE DEVELOPMENT ENGINEERS LIMITED	INDIA
3	EBY INDUSTRIES	INDIA
4	GUJRAT INFRAPIPES PVT. LIMITED	INDIA
5	ICEM ENGINEERING COMPANY LTD	INDIA
6	M.S. FITTINGS MFG. CO PVT LTD	INDIA
7	SIDHARTH & GAUTAM ENGINEERS	INDIA
8	TEEKAY TUBES PVT LTD	INDIA
9	TUBE PRODUCTS INCORPORATE	INDIA
18.0	**FITTINGS PIPE CAP UPTO 24"-A.S.**	
1	EBY INDUSTRIES	INDIA
2	ICEM ENGINEERING COMPANY LTD	INDIA
3	TEEKAY TUBES PVT LTD	INDIA
4	TUBE PRODUCTS INCORPORATE	INDIA
19.0	**FITTINGS PIPE CAP UPTO 24"- S.S.**	
1	DEE DEVELOPMENT ENGINEERS LIMITED	INDIA
2	EBY INDUSTRIES	INDIA
3	GUJRAT INFRAPIPES PVT. LIMITED	INDIA
4	ICEM ENGINEERING COMPANY LTD	INDIA
5	TEEKAY TUBES PVT LTD	INDIA
6	TUBE PRODUCTS INCORPORATE	INDIA
20.0	**FITTINGS TO IS-1239**	
1	M.S. FITTINGS MFG. CO PVT LTD	INDIA
21.0	**FITTINGS-IMPORTED (MANUFACTURERS)**	
1	ALLIED INTERNATIONAL S.R.L.	ITALY

SL NO	ITEM / VENDORS	COUNTRY
2	AWAJI SANGYO K.K.	THAILAND
3	ERNE FITTINGS GMBH	AUSTRIA/EUROPE
4	FLOW LINE DIVN.MARKOVITZ ENTERPRISES INC	U.S.A
5	FORGEROSSI SPA	ITALY
6	IBF S p A	ITALY
7	MUNRO & MILLER FITTINGS LTD	U.K
8	NIPPON BEND CO LTD	JAPAN
9	RACCORTUBI	ITALY
10	SUMITOMO METAL IND.LTD	JAPAN
11	SUNGKWANG BEND CO. LTD	SOUTH KOREA
12	TAYLOR FORGE STAINLESS	U.S.A
13	TECNOFORGE SPA	ITALY
14	WASK R M F	U.K
15	WEIR MATERIALS & FOUNDRIES	U.K
16	WILH SCHULZ GmbH	GERMANY
22.0	**FLANGE- CARBON STEEL**	
1	ABASI ENGINEERING WORKS	INDIA
2	BRITEX ENGINEERING WORKS	INDIA
3	CD ENGINEERING CO	INDIA
4	CD INDUSTRIES(GHAZIABAD)	INDIA
5	CHAUDHRY HAMMER WORKS LTD	INDIA
6	ECHJAY INDUSTRIES PVT LTD. (RAJKOT)	INDIA
7	GOLDEN IRON & STEEL WORKS	INDIA
8	J K FORGINGS	INDIA
9	JAV FORGINGS (P) LTD	INDIA
10	KUNJ FORGINGS PVT LTD	INDIA
11	M.S. FITTINGS MFG. CO PVT LTD	INDIA
12	METAL FORGINGS PVT LTD	INDIA
13	PRADEEP METAL LIMITED	INDIA
14	R.N.GUPTA & CO. LTD	INDIA
15	R.P.ENGINEERING PVT LTD	INDIA
16	SHAH INDUSTRIAL & COMML CORPORATION	INDIA
17	SHREE GANESH FORGINGS LTD	INDIA
18	UMA SHANKAR KHANDELWAL & CO	INDIA
23.0	**FLANGE- ALLOY STEEL**	
1	CD ENGINEERING CO.	INDIA
2	CHAUDHRY HAMMER WORKS LTD	INDIA
3	ECHJAY INDUSTRIES PVT LTD. (RAJKOT)	INDIA
4	GOLDEN IRON & STEEL WORKS	INDIA
5	JAV FORGINGS (P) LTD	INDIA

SL NO	ITEM / VENDORS	COUNTRY
6	M.S. FITTINGS MFG. CO PVT LTD	INDIA
7	METAL FORGINGS PVT LTD	INDIA
24.0	**FLANGE- STAINLESS STEEL**	
1	CD ENGINEERING CO.	INDIA
2	CD INDUSTRIES(GHAZIABAD)	INDIA
3	CHAUDHRY HAMMER WORKS LTD	INDIA
4	ECHJAY INDUSTRIES PVT LTD. (RAJKOT)	INDIA
5	GOLDEN IRON & STEEL WORKS	INDIA
6	JAV FORGINGS (P) LTD	INDIA
7	METAL FORGINGS PVT LTD	INDIA
8	PRADEEP METAL LIMITED	INDIA
9	SHREE GANESH FORGINGS LTD	INDIA
10	UMA SHANKAR KHANDELWAL & CO	INDIA
25.0	**FLANGES**	
1	AWAJI SANGYO K.K.	THAILAND
2	NICOLA GALPERTI & FIGLIO S.P.A.	ITALY
3	TECNOFORGE	ITALY
4	UMA FORJA S.COOP.	SPAIN
26.0	**GASKET**	
1	CARBON LORRAINE CEFILAC ETANCHEITE(FRAN)	FRANCE
2	FLEXITALLIC LTD	U.K.
3	JAMES WALKER & CO LTD	U.K.
4	KLINGER FLUID CONTROL GMBH (FORM.R551)	AUSTRIA
5	LANZA S.P.A	ITALY
6	MOORSIDE MACHINING CO LTD	U.K.
7	REINZ-DIGHTUNGS GMBH	GERMANY
27.0	**GASKET METAL JACKETED**	
1	IGP ENGINEERS PVT. LIMITED	INDIA
2	MADRAS INDUSTRIAL PRODUCTS	INDIA
28.0	**GASKET METALLIC & SOFT IRON**	
1	IGP ENGINEERS PVT. LIMITED	INDIA
2	MADRAS INDUSTRIAL PRODUCTS	INDIA
3	MICRO PRECISION PRODUCTS PVT LTD	INDIA
29.0	**GASKET SPIRAL WOUND**	
1	GASKET INDIA PRIVATE LTD.	INDIA
2	GOODRICH GASKETS PVT LTD	INDIA
3	IGP ENGINEERS PVT. LIMITED	INDIA
4	MADRAS INDUSTRIAL PRODUCTS	INDIA
5	STARFLEX SEALING INDIA PVT LTD	INDIA
6	TEEKAY METAFLEX PVT. LTD.	INDIA

SL NO	ITEM / VENDORS	COUNTRY
7	UNIQUE INDUSTRIAL PACKINGS	INDIA
30.0	**HAMMER BLIND(CARBON STEEL**	
1	SHREEPAD ENGINEERING CO.	INDIA
2	YAMUNA ENGG CO	INDIA
31.0	**HOSE METALLIC FLEXIBLE SS**	
1	AEROFLEX INDUSTRIES PVT LTD	INDIA
2	BENGAL INDUSTRIES PVT LTD	INDIA
3	GAYTRI INDUSTRIAL CORPORATION	INDIA
4	INSAP FLEXIBLES & ENGINEERS PVT. LTD.	INDIA
5	SENIOR INDIA PRIVATE LIMITED	INDIA
32.0	**HOSE- RUBBER (STEAM/GAS/AIR/WATER/CHEM.)**	
1	GAYTRI INDUSTRIAL CORPORATION	INDIA
2	SONI RUBBER PRODUCTS LTD	INDIA
3	SRIDHAR RUBBER PRODUCTS PVT LTD	INDIA
33.0	**INDICATOR-FLOW GLASSES**	
1	BLISS ANAND PVT LTD	INDIA
2	FRIEDRICH KROMBACH GMBH & CO.KG	GERMANY
3	LEVCON INSTRUMENTS PVT LTD	INDIA
4	PRATOLINA INSTRUMENTS PVT LTD	INDIA
5	SIGMA INSTRUMENTS CO	INDIA
34.0	**PIPE-ALLOY STEEL(SEAMLESS) TO ASTM STDS**	
1	BHEL (TRICHY)	INDIA
2	ISMT LTD-AHMEDNGR	INDIA
3	ISMT LTD-BARAMATI	INDIA
4	MAHALAXMI SEAMLESS LIMITED	INDIA
5	MAHARASHTRA SEAMLESS LTD.	INDIA
35.0	**PIPE-CARBON STEEL TO INDIAN STANDARDS**	
1	ADVANCE STEEL TUBE LTD	INDIA
2	ASIAN MILLS PVT LTD	INDIA
3	GOODLUCK STEEL TUBES LTD.	INDIA
4	INDUS TUBE LIMITED	INDIA
5	JINDAL PIPES LTD	INDIA
6	JINDAL SAW LTD (KOSI WORKS)	INDIA
7	LALIT PROFILES & STEEL INDUSTRIES LTD	INDIA
8	MAHARASHTRA SEAMLESS LTD	INDIA
9	MAN INDUSTRIES (I) LTD	INDIA
10	MUKAT PIPES LTD	INDIA
11	MUKAT TANKS & VESSELS LTD.	INDIA
12	NORTH EASTERN TUBES LIMITED	INDIA
13	PRATIBHA PIPES &STRUCTURAL PVT LTD	INDIA

SL NO	ITEM / VENDORS	COUNTRY
14	PSL LIMITED (NANI CHIRAI)	INDIA
15	PSL LIMITED- (CHENNAI)	INDIA
16	RAMA STEEL TUBES LTD	INDIA
17	RATNAMANI METALS & TUBES LTD	INDIA
18	RATNAMANI METALS & TUBES LTD	INDIA
19	SRI SARBATI STEEL TUUBES LTD	INDIA
20	STEEL AUTHORITY OF INDIA LTD	INDIA
21	SURINDRA ENGINEERING CO LTD (RAJPURA)	INDIA
22	SURINDRA ENGINEERING CO LTD (MUMBAI)	INDIA
23	SURYA ROSHNI LTD	INDIA
24	SWASTIK PIPES LTD	INDIA
25	THE TATA IRON & STEEL CO LTD	INDIA
26	UTKARSH TUBES PVT. L TD. (FORMERLY BMW)	INDIA
27	WELSPUN GUJARAT STAH ROHREN LTD	INDIA
36.0	**PIPE-CARBON STEEL (SEAMLESS) TO ASTM STDS**	
1	BHEL (TRICHY)	INDIA
2	CHANGSHU SEAMLESS STEEL TUBE CO. LTD	CHINA
3	HEAVY METALS & TUBES LIMITED(MEHSANA)	INDIA
4	ISMT LTD-AHMEDNGR	INDIA
5	ISMT LTD-BARAMATI	INDIA
6	JINDAL SAW LTD (NASHIK WORKS)	INDIA
7	MAHALAXMI SEAMLESS LIMITED	INDIA
8	MAHARASHTRA SEAMLESS LTD.	INDIA
9	SAINEST TUBES PVT LTD	INDIA
10	WUXI ERQUAN SPECIAL STEEL TUBE CO. LTD	CHINA
37.0	**PIPE-CARBON STEEL (WELDED) TO ASTM STDS**	
1	JINDAL SAW LTD (KOSI WORKS)	INDIA
2	LALIT PROFILES & STEEL INDUSTRIES LTD	INDIA
3	MAN INDUSTRIES (I) LTD	INDIA
4	MUKAT PIPES LTD	INDIA
5	MUKAT TANKS & VESSELS LTD	INDIA
6	RATNAMANI METALS & TUBES LTD	INDIA
7	SURINDRA ENGINEERING CO LTD-(MUMBAI)	INDIA
38.0	**PIPE- CLADDED**	
1	EXPLOSIVE FABRICATORS INC	U.S.A.
2	JAPAN STEEL WORKS LTD	JAPAN
39.0	**PIPE-SEAMLESS ALLOY STEEL**	
1	BENTELER STAHL/ROHR GMBH	GERMANY
2	DALMINE SPA (ENQUIRY TO TENARIS)	ITALY
3	IBF S p A	ITALY

SL NO	ITEM / VENDORS	COUNTRY
4	INTERNATIONAL EXTRUDED PRODUCTS LLC	U.S.A.
5	JFE STEEL CORPORATION	JAPAN
6	MANNESMANN DMV STAINLESS FRANCE S.A.S.	FRANCE
7	SUMITOMO METAL IND.LTD	JAPAN
8	TUBOS DE ACERO DE MEXICO SA(ENQ.TENARIS	MEXICO
9	VALLOUREC AND MANNESMANN TUBES	FRANCE
40.0	**PIPE-SEAMLESS API5L**	
1	DALMINE SPA (ENQUIRY TO TENARIS)	ITALY
2	JFE STEEL CORPORATION	JAPAN
3	MANNESMANN S.A.	BRAZIL
4	MITTAL STEEL ROMAN S. A.	Romania
5	PREUSSAG HANDEL GMBH	GERMANY
6	SIDERCA S.A.I.C. (ENQUIRY TO TENARIS)	ARGENTINA
7	SOCONORD O.C.T.G.	BELGIUM
8	SUMITOMO METAL IND.LTD	JAPAN
9	TUBOS DE ACERO DE MEXICO SA(ENQ.TENARIS	MEXICO
10	TUBOS REUNIDOS SA	SPAIN
11	VALCOVNY TRUB CHOMUTOV CZECH	REPUBLIC
12	VALLOUREC AND MANNESMANN TUBES	FRANCE
13	VOLSKI TUBE MILL	RUSSIA
41.0	**PIPE-SEAMLESS CARBON STEEL**	
1	BENTELER STAHL/ROHR GMBH1	GERMANY
2	DALMINE SPA (ENQUIRY TO TENARIS)2	ITALY
3	JFE STEEL CORPORATION3 x	ITALY
4	KATAKURA STEEL TUBE CO LTD4	JAPAN
5	MANNESMANN S.A.5	BRAZIL
6	MITTAL STEEL ROMAN S. A	Romania
7	SUMITOMO METAL IND.LTD	JAPAN
8	TUBOS REUNIDOS SA	SPAIN
9	VALCOVNY TRUB CHOMUTOV CZECH	REPUBLIC
10	VALLOUREC AND MANNESMANN TUBES	FRANCE
42.0	**PIPE-SEAMLESS STAINLESS STEEL**	
1	ASSAB INTERNATIONAL AB	SWEDEN
2	BSL TUBES ET RACCORDS	FRANCE
3	DALMINE SPA (ENQUIRY TO TENARIS)	ITALY
4	IBF S p A	ITALY
5	INTERNATIONAL EXTRUDED PRODUCTS LLC U.S.A	U.S.A
6	JFE STEEL CORPORATION	JAPAN
7	MANNESMANN DMV STAINLESS FRANCE S.A.S	FRANCE
8	NIPPON METAL INDUSTRY CO	JAPAN

SL NO	ITEM / VENDORS	COUNTRY
9	SANDVIK AB	INDIA
10	SCHOELLER-BLECKMANN EDELSTAHLROHR	AUSTRIA
11	SUMITOMO METAL IND.LTD	JAPAN
12	TUBACEX TUBOS INOXIDABLES SA	INDIA
13	WEIR MATERIALS & FOUNDRIES	U.K.
14	ZHEJIANG JIULI STNLESS STEEL PIPE CO LTD	CHINA
43.0	**PIPE-SEAMLESS (DUPLEX/SUPER DUPLEX SS)**	
1	RATNAMANI METALS & TUBES LTD	INDIA
2	SANDVIK ASIA LIMITED	INDIA
44.0	**PIPE-SS(SEAMLESS & WELDED)TO ASTM STDS**	
1	HEAVY METALS & TUBES LIMITED(MEHSANA)	INDIA
2	JINDAL SAW LTD (NASHIK WORKS)	INDIA
3	NUCLEAR FUEL COMPLEX	INDIA
4	RAJENDRA MECH INDUSTRIES LTD	INDIA
5	RATNAMANI METALS & TUBES LTD	INDIA
6	RATNAMANI METALS & TUBES LTD	INDIA
7	SANDVIK ASIA LIMITED	INDIA
8	SURAJ STAINLESS LTD	INDIA
45.0	**PIPE-WELDED ALLOY STEEL**	
1	DALMINE SPA (ENQUIRY TO TENARIS) I	ITALY
2	JFE STEEL CORPORATION	JAPAN
3	NIPPON MINING CO. LTD (NO ENQUIRY)	JAPAN
4	NIPPON STEEL CORPORATION	JAPAN
5	SUMITOMO METAL IND.LTD	JAPAN
46.0	**PIPE- WELDED API5L**	
1	CORUS UK LIMITED (ENQ.TO DELHI LIAISION)	U.K.
2	EUROPIPE GMBH	GERMANY
3	ILVA LAMIERE E TUBI SRL(ENQ TO ILVA SPA)	ITALY
4	IPSCO INC.	CANADA
5	JFE STEEL CORPORATION	JAPAN
6	NAPA PIPE CORPORATION	U.S.A.
7	NIPPON STEEL CORPORATION	JAPAN
8	PRODUCTORA MEXICANA DE TUBERIA S.A.DE CV	MEXICO
9	SIAT S.A. (ENQUIRY TO CONFAB)	ARGENTINA
10	SUMITOMO METAL IND.LTD	JAPAN
11	THYSSEN MANNESMANN HANDEL GMBH	GERMANY
12	TUBACERO S.A.	MEXICO
13	UMRAN STEEL PIPE INC (TURKEY)	TURKEY
14	VOLSKI TUBE MILL	RUSSIA
47.0	**PIPE- WELDED CARBON STEEL**	

SL NO	ITEM / VENDORS	COUNTRY
1	CONFAB INDUSTRIAL S.A	BRAZIL
2	CORUS UK LIMITED (ENQ.TO DELHI LIAISION)	U.K.
3	DALMINE SPA (ENQUIRY TO TENARIS)	ITALY
4	EUROPIPE GMBH	GERMANY
5	JFE STEEL CORPORATION	JAPAN
6	KATAKURA STEEL TUBE CO LTD	JAPAN
7	NIPPON STEEL CORPORATION	INDIA
8	SUMITOMO METAL IND.LTD	JAPAN
48.0	**PIPE- WELDED STAINLESS STEEL**	
1	ASSAB INTERNATIONAL AB	SWEDEN
2	AVESTA SANDVIK TUBE B.V.	SWEDEN
3	BENTHAM INTERNATIONAL LTD	U.K.
4	BSL TUBES ET RACCORDS	FRANCE
5	DALMINE SPA (ENQUIRY TO TENARIS)	ITALY
6	INOX TECH. SPA	ITALY
7	NIPPON METAL INDUSTRY CO	JAPAN
8	NIPPON STEEL CORPORATION	JAPAN
9	SANDVIK AB	SWEDEN
10	SUMITOMO METAL IND.LTD	JAPAN
11	THYSSEN MANNESMANN HANDEL GMBH	GERMANY
12	WEIR MATERIALS & FOUNDRIES	U.K.
49.0	**PIPES- SS WELDED TO A 358**	
1	RAJENDRA MECH INDUSTRIES LTD	INDIA
2	RATNAMANI METALS & TUBES LTD	INDIA
3	RATNAMANI METALS & TUBES LTD	INDIA
50.0	**SAMPLE COOLER.**	
1	AERO ENGINEERS	INDIA
2	ENPRO INDUSTRIES PVT LTD	INDIA
3	MEENAKSHI ASSOCIATES PVT LTD	INDIA
4	TUBE WELD ENGINEERING WORKS LTD.	INDIA
51.0	**SPRING SUPPORTS**	
1	PIPE SUPPORTS INDIA PVT LTD	INDIA
2	PIPING & ENERGY PRODUCTS (P) LTD	INDIA
3	SARATHI ENGG ENTERPRISES	INDIA
4	SPRING SUPPORTS MFG CO	INDIA
52.0	**STATIC MIXER**	
1	CHEMINEER INC.	U.S.A.
2	LIGHTNIN MIXERS LTD	U.K.
3	MIXRITE CORPORATION	INDIA
4	RATHI LIGHTNIN MIXERS PVT LTD	INDIA

SL NO	ITEM / VENDORS	COUNTRY
5	STATIFLO INTERNATIONAL LIMITED	U.K.
6	SULZER BROTHERS LTD (ENQ.TO S-211)	SWITZERLAND
7	SULZER INDIA LTD	INDIA
53.0	**STEAM SUPPLY / COND. RECOVERY MANIFOLD**	
1	ARMSTRONG INTERNATIONAL SA	BELGIUM
2	SPIRAX MARSHALL LIMITED	INDIA
54.0	**STEAM TRAPS**	
1	ARMSTRONG INTERNATIONAL INC.	U.S.A.
2	FUSHIMAN CO LTD	JAPAN
3	MIYAWAKI INC	JAPAN
4	PLENTY STEAM TRAPS, PLENTY LIMITED	U.K.
5	TLV INTERNATIONAL INC	JAPAN
6	YARWAY CORPORATION	U.S.A.
55.0	**STEAM TRAPS-BUCKET/TH.DYN/TH.STAT/FLOAT**	
1	ESCO (A DIV.OF JM STEAMCON PVT LTD)	INDIA
2	PENNANT ENGINEERING PVT LTD	INDIA
3	SPIRAX MARSHALL LIMITED	INDIA
4	VARALL ENGINEERS	INDIA
56.0	**STRAINERS**	
1	BARTON FIRTOP ENGINEERING CO. LTD	U.K.
2	EPE EPENSTENNER GMBH & CO	GERMANY
3	FLOWTECH FLUID HANDLING LTD	U.K.
4	FORAIN S.R.L.	ITALY
5	FRIEDRICH KROMBACH GMBH & CO.KG	GERMANY
6	FUJI FILTER MFG CO LTD	JAPAN
7	NEWARK WIRE CLOTH CO	U.S.A.
8	SPIRAX SARCO INTERNATIONAL INC	U.S.A.
9	VEE BEE LIMITED	U.K.
57.0	**STRAINERS (FAB/CAST/FORGED)**	
1	BOMBAY CHEMICAL EQUIPMENTS	INDIA
2	FILTERATION ENGINEERS (I) PVT. LTD.	INDIA
3	GRAND PRIX FAB.(P) LTD(FORMLY A.G.STEEL)	INDIA
4	GUJARAT OTOFILT	INDIA
5	MULTITEX FILTRATION ENGINEERS LTD.	INDIA
6	SPIRAX MARSHALL LIMITED	INDIA
7	VARALL ENGINEERS	INDIA
58.0	**VALVE BALL - FIRE SAFE (FORGED)**	
1	BELGAUM AQUA VALVES PVT. LTD.	INDIA
2	MICROFINISH VALVES PVT LIMITED	INDIA
59.0	**VALVE BALL FIRE SAFE-CCS**	

SL NO	ITEM / VENDORS	COUNTRY
1	BELGAUM AQUA VALVES PVT. LTD.	INDIA
2	FLOW CHEM INDUSTRIES	INDIA
3	LARSEN & TOUBRO LTD	INDIA
4	MICROFINISH VALVES PVT LIMITED	INDIA
5	REYNOLD VALVES LTD	INDIA
6	VIRGO ENGINEERS LIMITED	INDIA
60.0	**VALVE BALL FIRE SAFE-CSS**	
1	BELGAUM AQUA VALVES PVT. LTD.	INDIA
2	FLOW CHEM INDUSTRIES	INDIA
3	LARSEN & TOUBRO LTD	INDIA
4	MICROFINISH VALVES PVT LIMITED	INDIA
5	REYNOLD VALVES LTD	INDIA
6	VIRGO ENGINEERS LIMITED	INDIA
61.0	**VALVE BALL JACKETED - NON FIRE SAFE**	
1	MICROFINISH VALVES PVT LIMITED	INDIA
62.0	**VALVE BALL MULTIPORT NON FIRE SAFE**	
1	MICROFINISH VALVES PVT LIMITED	INDIA
63.0	**VALVE BALL NON FIRE SAFE-CCS**	
1	BELGAUM AQUA VALVES PVT. LTD.	INDIA
2	FLOW CHEM INDUSTRIES	INDIA
3	LARSEN & TOUBRO LTD	INDIA
4	LEADER VALVES LTD	INDIA
5	MEVADA ENGG.WORKS	INDIA
6	MICROFINISH VALVES PVT LIMITED	INDIA
7	OSWAL INDUSTRIES LTD	INDIA
8	REYNOLD VALVES LTD	INDIA
9	VIRGO ENGINEERS LIMITED	INDIA
64.0	**VALVE BALL NON FIRE SAFE-CSS**	
1	BELGAUM AQUA VALVES PVT. LTD.	INDIA
2	FLOW CHEM INDUSTRIES	INDIA
3	LARSEN & TOUBRO LTD	INDIA
4	LEADER VALVES LTD	INDIA
5	MEVADA ENGG.WORKS INDIA	INDIA
6	MICROFINISH VALVES PVT LIMITED	INDIA
7	OSWAL INDUSTRIES LTD	INDIA
8	REYNOLD VALVES LTD	INDIA
9	VIRGO ENGINEERS LIMITED	INDIA
65.0	**VALVE BALL NON FIRE SAFE-FCS**	
1	BELGAUM AQUA VALVES PVT. LTD.	INDIA
2	FLOW CHEM INDUSTRIES I	INDIA

SL NO	ITEM / VENDORS	COUNTRY
3	LEADER VALVES LTD I	INDIA
4	MEVADA ENGG.WORKS	INDIA
5	MICROFINISH VALVES PVT LIMITED	INDIA
66.0	**VALVE BALL NON FIRE SAFE-FSS**	
1	BELGAUM AQUA VALVES PVT. LTD.	INDIA
2	FLOW CHEM INDUSTRIES	INDIA
3	LEADER VALVES LTD	INDIA
4	MEVADA ENGG.WORKS	INDIA
5	MICROFINISH VALVES PVT LIMITED	INDIA
67.0	**VALVE BELLOW SEALED**	
1	BELL-O-SEAL VALVES PVT LTD	INDIA
2	MICROFINISH VALVES PVT LIMITED	INDIA
68.0	**VALVE BUTTERFLY**	
1	BATLEY VALVE CO LTD, THE	U.K.
2	BF KOGYO KAISHA LTD	JAPAN
3	CHARLES WINN (VALVES) LTD.	U.K.
4	COOPER CAMERON (SINGAPORE) PTE LTD.	U.S.A
5	CRANE AUSTRALIA PTY LTD	AUSTRALIA
6	FLOWSERVE PTE (MFR. SERCK)	SINGAPORE
7	FLOWSERVE PTE LTD	SINGAPORE
8	FRIEDRICH KROMBACH GMBH & CO.KG	GERMANY
9	GUICHON VALVES	FRANCE
10	HATTERSLEY NEWMAN HENDER LTD.	U.K.
11	KURIMOTO LTD	JAPAN
12	LANZA S.P.A.	ITALY
13	MCCANNA VALVES INC	U.S.A
14	METSO AUTOMATION PTE LTD(FORMERLY NELES)	U.K.
15	NAKAKITA SEISAKUSHO CO LTD	JAPAN
16	ORTON S.R.L SS	ITALY
17	PCC WOUTER WITZEL	NETHERLANDS
18	PIETRO FIORENTINI SPA	ITALY
19	SASAKURA ENGINEERING CO LTD	JAPAN
20	SPX VALVES & CONTROLS (FORMERLY DEZURIK)	U.S.A
21	TYCO VALVES & CONTROLS (VALVATRON)	U.S.A
22	TYCO VALVES & CONTROLS ITALIA SPA	ITALY
23	WESTAD INDUSTRI A S	NORWAY
69.0	**VALVE BUTTERFLY (PTFE SEATED)**	
1	INTERVALVE (INDIA) LTD.	INDIA
70.0	**VALVE BUTTERFLY – CS**	
1	ADVANCE VALVES PVT LTD	INDIA

SL NO	ITEM / VENDORS	COUNTRY
2	BDK PROCESS CONTROLS PVT LTD	INDIA
3	CRANE PROCESS FLOW TECHNOLOGIES IND. LTD	INDIA
4	FOURESS ENGG.(INDIA) LTD.(BLR.WORK)	INDIA
5	INSTRUMENTATION LTD. (PALGHAT)	INDIA
6	INTERVALVE (INDIA) LTD	INDIA
7	LARSEN & TOUBRO LTD	INDIA
8	LEADER VALVES LTD	INDIA
9	TYCO VALVES & CONTROLS INDIA PVT LTD	INDIA
10	VALFLO PVT LIMITED	INDIA
71.0	**VALVE BUTTERFLY - CAS**	
1	CRANE PROCESS FLOW TECHNOLOGIES IND. LTD	INDIA
72.0	**VALVE BUTTERFLY - CSS**	
1	ADVANCE VALVES PVT LTD	INDIA
2	CRANE PROCESS FLOW TECHNOLOGIES IND. LTD	INDIA
3	FOURESS ENGG.(INDIA) LTD.(BLR.WORK)	INDIA
4	INSTRUMENTATION LTD. (PALGHAT)	INDIA
5	INTERVALVE (INDIA) LTD.	INDIA
6	LARSEN & TOUBRO LTD	INDIA
7	LEADER VALVES LTD	INDIA
8	TYCO VALVES & CONTROLS INDIA PVT LTD	INDIA
9	VALFLO PVT LIMITED	INDIA
73.0	**VALVE CHECK**	
1	ALCO ITALIA SPA	ITALY
2	AMPO, S.COOP (POYAM VALVES)	SPAIN
3	BABCOCK POWER ESPANA SA	SPAIN
4	BEL VALVES	U.K.
5	BFE SPA	ITALY
6	CONVAL INC	U.S.A.
7	CRANE AUSTRALIA PTY LTD	AUSTRALIA
8	DANIEL MEASURMNT & CONTROL ASIA PACIFIC	U.S.A.
9	ENTECH DEUTSCHLAND GMBH	ITALY
10	FLOWSERVE PTE(MFR. EDWARD)	U.S.A.
11	FRIATEC LIMITED	U.K.
12	FRIEDRICH KROMBACH GMBH & CO.KG	GERMANY
13	GESTRA AG	GERMANY
14	GOODWIN INTERNATIONAL LTD	U.K.
15	GUICHON VALVES	FRANCE
16	ISHIDA VALVE MFG CO. LTD	JAPAN
17	KURIMOTO LTD	JAPAN
18	LAZARO ITUARTE S.A.	SPAIN

SL NO	ITEM / VENDORS	COUNTRY
19	LVF SPA	ITALY
20	MALBRANQUE S.A	FRANCE
21	MOKVELD VALVES BV	NETHERLANDS
22	NEWMANS INC.	U.S.A.
23	OMB VALVES	ITALY
24	PETROL VALVES SRL	ITALY
25	RING-O VALVE OPERATIONS	ITALY
26	SEMPELL AG	GERMANY
27	SITINDUSTRIE EQUIPMENT S.R.L.	ITALY
28	STAHL ARMATUREN PERSTA GMBH	GERMANY
29	SUFA LTD	CHINA
30	TAKAMISAWA VALVE CO LTD(ENQ TO MEC CORPN	JAPAN
31	TOM WHEATLEY VALVE OPERATIONS	U.S.A.
32	TRUFLO RONA S.A.	BELGIUM
33	TYCO VALVES AND CONTROLS ITALIA S.R.L	ITALY
34	VALVINOX SRL	ITALY
35	VALVOSIDER	ITALY
36	VELAN INC	U.K.
37	VITAS - DIVISION OF VALVITALIA S.P.A	ITALY
38	WHEATLEY GASO INC	U.S.A.
39	YONEKI VALVE CO LTD	JAPAN
40	Z & J TECHNOLOGIES GMBH	GERMANY
74.0	**VALVE CHECK (DUAL PLATE WAFER TYPE)**	
1	ADVANCE VALVES PVT LTD	INDIA
2	BDK ENGINEERING INDUSTRIES LTD	INDIA
75.0	**VALVE CHECK CAST**	
1	ADVANCE VALVES PVT LTD	INDIA
2	BDK ENGINEERING INDUSTRIES LTD	INDIA
3	BHEL (TRICHY)	INDIA
4	ECONO VALVES PVT. LTD.	INDIA
5	FOURESS ENGG (I) LTD. (AURANGABAD)	INDIA
6	KSB PUMPS LTD (COIMBATTORE)	INDIA
7	LARSEN & TOUBRO LTD	INDIA
8	LEADER VALVES LTD	INDIA
9	NITON VALVE INDUSTRIES PRIVATE LTD .	INDIA
10	NSSL LTD. (NECO SCHUBERT & SALZER LTD)	INDIA
11	OSWAL INDUSTRIES LTD	INDIA
12	PANCHVATI VALVES & FLANGES PVT LTD	INDIA
13	PETROCHEMICAL ENGINEERING ENTERPRISES	INDIA
14	SAKHI ENGINEERS PVT. LTD.	INDIA

SL NO	ITEM / VENDORS	COUNTRY
15	SHALIMAR VALVES PVT LTD	INDIA
16	STEEL STRONG VALVES INDIA PVT LTD	INDIA
76.0	**VALVE CHECK EXCESS FLOW**	
1	CHANDRA ENGG. & MECH PVT LTD.	INDIA
2	COOPER CAMERON (SINGAPORE) PTE LTD.	U.S.A.
3	MIYAIRI VALVES MFG CO LTD	JAPAN
77.0	**VALVE CHECK FORGED**	
1	ASSOCIATED TOOLINGS INDIA PVT LTD	INDIA
2	AUTOCAP INDUSTRIES	INDIA
3	BDK ENGINEERING INDUSTRIES LTD	INDIA
4	BHEL (TRICHY)	INDIA
5	ECONO VALVES PVT. LTD.	INDIA
6	FOURESS ENGG (I) LTD. (AURANGABAD)	INDIA
7	KSB PUMPS LTD (COIMBATTORE)	INDIA
8	LARSEN & TOUBRO LTD	INDIA
9	LEADER VALVES LTD	INDIA
10	NITON VALVE INDUSTRIES PRIVATE LTD .	INDIA
11	OSWAL INDUSTRIES LTD	INDIA
12	PANCHVATI VALVES & FLANGES PVT LTD	INDIA
13	PETROCHEMICAL ENGINEERING ENTERPRISES	INDIA
14	STEEL STRONG VALVES INDIA PVT LTD	INDIA
78.0	**VALVE CHECK GUNMETAL/BRASS/BRONZE**	
1	H. SARKAR & COMPANY	INDIA
2	LEADER VALVES LTD	INDIA
3	ZOLOTO INDUSTRIES	INDIA
79.0	**VALVE CRYOGENIC**	
1	AMPO, S.COOP (POYAM VALVES)	SPAIN
2	FLOW CONTROL TECHNOLOGIES	FRANCE
3	LVF SPA	ITALY
4	VELAN INC	U.K.
80.0	**VALVE CUTTING**	
1	CRANE AUSTRALIA PTY LTD	AUSTRALIA
2	KUBOTA CORPORATION	JAPAN
3	SPX VALVES & CONTROLS (FORMERLY DEZURIK)	U.S.A
81.0	**VALVE DIAPHRAGM**	
1	DRESSER PRODUITS INDUSTRIELS	FRANCE
2	KITAMURA VALVE MANUFACTURING CO LTD	JAPAN
3	MCCANNA VALVES INC	U.S.A
4	NIPPON DAIYO VALVE CO LTD	JAPAN
5	RICHTER CHEMIE-TECHNIK GMBH	GERMANY

SL NO	ITEM / VENDORS	COUNTRY
6	SAUNDERS VALVE CO LTD	U.K.
82.0	**VALVE DIAPHRAGM CAST CARBON STEEL**	
1	BDK PROCESS CONTROLS PVT LTD	INDIA
2	CRANE PROCESS FLOW TECHNOLOGIES IND. LTD	INDIA
3	PROCON ENGINEERS	INDIA
83.0	**VALVE DIAPHRAGM CAST STAINLESS STEEL**	
1	BDK PROCESS CONTROLS PVT LTD	INDIA
2	CRANE PROCESS FLOW TECHNOLOGIES IND. LTD	INDIA
84.0	**VALVE GATE**	
1	ALCO ITALIA SPA	ITALY
2	AMPO, S.COOP (POYAM VALVES)	SPAIN
3	BABCOCK POWER ESPANA SA	SPAIN
4	BEL VALVES	U.K.
5	BFE SPA	ITALY
6	BREDA ENERGIA SESTO INDUSTRIA SPA	ITALY
7	CRANE AUSTRALIA PTY LTD	AUSTRALIA
8	FLOWSERVE PTE(MFR. EDWARD).	U.S.A
9	FRIATEC LIMITED	U.K.
10	FRIEDRICH KROMBACH GMBH & CO.KG	GERMANY
11	GUICHON VALVES	FRANCE
12	ISHIDA VALVE MFG CO. LTD	JAPAN
13	KUBOTA CORPORATION	JAPAN
14	KURIMOTO LTD	JAPAN
15	LAZARO ITUARTE S.A.	SPAIN
16	LVF SPA	ITALY
17	MALBRANQUE S.A	FRANCE
18	NEWMANS INC.	U.S.A
19	OMB VALVES	ITALY
20	PETROL VALVES SRL	ITALY
21	RING-O VALVE OPERATIONS	ITALY
22	SEMPELL AG	GERMANY
23	STAHL ARMATUREN PERSTA GMBH GERMANY	GERMANY
24	SUFA LTD	CHINA
25	TAKAMISAWA VALVE CO LTD(ENQ TO MEC CORPN	JAPAN
26	TRUFLO RONA S.A.	BELGIUM
27	TYCO VALVES AND CONTROLS ITALIA S.R.L	ITALY
28	VALVINOX SRL	ITALY
29	VALVOSIDER	ITALY
30	VELAN INC	U.K.
31	VITAS - DIVISION OF VALVITALIA S.P.A	ITALY

SL NO	ITEM / VENDORS	COUNTRY
32	WHEATLEY GASO INC	U.S.A
33	YONEKI VALVE CO LTD	JAPAN
34	Z & J TECHNOLOGIES GMBH	GERMANY
85.0	**VALVE GATE CAST**	
1	BDK ENGINEERING INDUSTRIES LTD	INDIA
2	BHEL (TRICHY)	INDIA
3	ECONO VALVES PVT. LTD.	INDIA
4	FOURESS ENGG (I) LTD. (AURANGABAD)	INDIA
5	KSB PUMPS LTD (COIMBATTORE)	INDIA
6	LARSEN & TOUBRO LTD	INDIA
7	LEADER VALVES LTD	INDIA
8	NITON VALVE INDUSTRIES PRIVATE LTD	INDIA
9	NSSL LTD. (NECO SCHUBERT & SALZER LTD)	INDIA
10	OSWAL INDUSTRIES LTD	INDIA
11	PANCHVATI VALVES & FLANGES PVT LTD	INDIA
12	PETROCHEMICAL ENGINEERING ENTERPRISES	INDIA
13	SAKHI ENGINEERS PVT. LTD	INDIA
14	SHALIMAR VALVES PVT LTD	INDIA
15	STEEL STRONG VALVES INDIA PVT LTD	INDIA
86.0	**VALVE GATE FORGED**	
1	ASSOCIATED TOOLINGS INDIA PVT LTD	INDIA
2	AUTOCAP INDUSTRIES	INDIA
3	BDK ENGINEERING INDUSTRIES LTD	INDIA
4	BHEL (TRICHY) INDIA	INDIA
5	ECONO VALVES PVT. LTD.	INDIA
6	FOURESS ENGG (I) LTD. (AURANGABAD)	INDIA
7	KSB PUMPS LTD (COIMBATTORE)	INDIA
8	LARSEN & TOUBRO LTD	INDIA
9	LEADER VALVES LTD	INDIA
10	NITON VALVE INDUSTRIES PRIVATE LTD	INDIA
11	OSWAL INDUSTRIES LTD	INDIA
12	PANCHVATI VALVES & FLANGES PVT LTD	INDIA
13	PETROCHEMICAL ENGINEERING ENTERPRISES	INDIA
14	STEEL STRONG VALVES INDIA PVT LTD	INDIA
87.0	**VALVE GATE GUNMETAL/BRASS/BRONZE**	
1	H. SARKAR & COMPANY	INDIA
2	LEADER VALVES LTD	INDIA
3	ZOLOTO INDUSTRIES	INDIA
88.0	**VALVE GATE/THRU CONDUIT GATE VLV (AP16D)**	
1	BEL VALVES	U.K.

SL NO	ITEM / VENDORS	COUNTRY
2	COOPER CAMERON (SINGAPORE) PTE LTD.	U.S.A
3	TYCO VALVES AND CONTROLS ITALIA S.R.L	ITALY
4	Z & J TECHNOLOGIES GMBH	GERMANY
89.0	**VALVE GLOBE**	
1	ALCO ITALIA SPA	ITALY
2	AMPO, S.COOP (POYAM VALVES)	SPAIN
3	BABCOCK POWER ESPANA SA	SPAIN
4	BEL VALVES	U.K.
5	BFE SPA	ITALY
6	CONVAL INC	U.S.A
7	CRANE AUSTRALIA PTY LTD	AUSTRALIA
8	DESCOTE	FRANCE
9	FLOWSERVE PTE(MFR. EDWARD)	U.S.A
10	FRIATEC LIMITED	U.K.
11	FRIEDRICH KROMBACH GMBH & CO.KG	GERMANY
12	GUICHON VALVES	FRANCE
13	ISHIDA VALVE MFG CO. LTD	JAPAN
14	KLEIN ROBINETTERIE INDUSTRIELLE	FRANCE
15	KURIMOTO LTD	JAPAN
16	LAZARO ITUARTE S.A.	SPAIN
17	LVF SPA	ITALY
18	MALBRANQUE S.A	FRANCE
19	NEWMANS INC.	U.S.A.
20	OMB VALVES	ITALY
21	PETROL VALVES SRL	ITALY
22	RING-O VALVE OPERATIONS	ITALY
23	SEMPELL AG	GERMANY
24	STAHL ARMATUREN PERSTA GMBH	GERMANY
25	SUFA LTD	CHINA
26	TAKAMISAWA VALVE CO LTD(ENQ TO MEC CORPN	JAPAN
27	TRUFLO RONA S.A.	BELGIUM
28	TYCO VALVES AND CONTROLS ITALIA S.R.L	ITALY
29	VALVINOX SRL	ITALY
30	VALVOSIDER	ITALY
31	VELAN INC	U.K
32	VITAS - DIVISION OF VALVITALIA S.P.A	ITALY
33	WHEATLEY GASO INC	U.S.A.
34	YONEKI VALVE CO LTD	JAPAN
35	Z& J TECHNOLOGIES GMBH	GERMANY
90.0	**VALVE GLOBE BELLOW SEALED**	

SL NO	ITEM / VENDORS	COUNTRY
1	ASTAVA B.V.	NETHERLANDS
2	CRANE AUSTRALIA PTY LTD	AUSTRALIA
3	DESCOTE	FRANCE
4	FRIATEC LIMITED	U.K.
5	NOVATEC NOUVELLE TECHNOLOGIES	FRANCE
6	PHONIX ARMATUREN WERKE BREGEL GMBH	GERMANY
7	RICHTER CHEMIE-TECHNIK GMBH	GERMANY
8	STAHL ARMATUREN PERSTA GMBH	GERMANY
9	VELAN INC	U.K.
91.0	**VALVE GLOBE CAST**	
1	BDK ENGINEERING INDUSTRIES LTD	INDIA
2	BHEL (TRICHY)	INDIA
3	ECONO VALVES PVT. LTD.	INDIA
4	FOURESS ENGG (I) LTD. (AURANGABAD)	INDIA
5	KSB PUMPS LTD (COIMBATTORE)	INDIA
6	LARSEN & TOUBRO LTD	INDIA
7	LEADER VALVES LTD	INDIA
8	NITON VALVE INDUSTRIES PRIVATE LTD .	INDIA
9	NSSL LTD. (NECO SCHUBERT & SALZER LTD)	INDIA
10	OSWAL INDUSTRIES LTD	INDIA
11	PANCHVATI VALVES & FLANGES PVT LTD	INDIA
12	PETROCHEMICAL ENGINEERING ENTERPRISES	INDIA
13	SAKHI ENGINEERS PVT. LTD.	INDIA
14	SHALIMAR VALVES PVT LTD	INDIA
15	STEEL STRONG VALVES INDIA PVT LTD	INDIA
92.0	**VALVE GLOBE FORGED**	
1	ASSOCIATED TOOLINGS INDIA PVT LTD	INDIA
2	AUTOCAP INDUSTRIES	INDIA
3	BDK ENGINEERING INDUSTRIES LTD	INDIA
4	BHEL (TRICHY)	INDIA
5	ECONO VALVES PVT. LTD.	INDIA
6	FOURESS ENGG (I) LTD. (AURANGABAD)	INDIA
7	KSB PUMPS LTD (COIMBATTORE)	INDIA
8	LARSEN & TOUBRO LTD	INDIA
9	LEADER VALVES LTD	INDIA
10	NITON VALVE INDUSTRIES PRIVATE LTD .	INDIA
11	OSWAL INDUSTRIES LTD	INDIA
12	PANCHVATI VALVES & FLANGES PVT LTD	INDIA
13	PETROCHEMICAL ENGINEERING ENTERPRISES	INDIA
14	SEMPELL VALVES PVT LTD	INDIA

SL NO	ITEM / VENDORS	COUNTRY
15	STEEL STRONG VALVES INDIA PVT LTD	INDIA
93.0	**VALVE GLOBE GUNMETAL/BRASS/BRONZE**	
1	H. SARKAR & COMPANY	INDIA
2	LEADER VALVES LTD	INDIA
3	ZOLOTO INDUSTRIES	INDIA
94.0	**VALVE KNIFE GATE**	
1	MICROFINISH VALVES PVT LIMITED	INDIA
2	VAAS INDUSTRIES PVT LTD	INDIA
95.0	**VALVE NEEDLE**	
1	ASSOCIATED TOOLINGS INDIA PVT LTD	INDIA
2	EXCELSIOR ENGG. WORKS	INDIA
3	LEADER VALVES LTD	INDIA
4	TECNOMATIC INDIA PVT LTD	INDIA
96.0	**VALVE PISTON (SEATLESS) – CCS**	
1	ARMSTRONG INTERNATIONAL SA	BELGIUM
2	FORBES MARSHALL	INDIA
3	UNI KLINGER LTD	INDIA
97.0	**VALVE PLUG**	
1	FLOWSERVE PTE (MFR. NORDSTORM)	SINGAPORE
2	FLOWSERVE PTE (MFR. SERCK)	SINGAPORE
3	FLOWSERVE PTE LTD	SINGAPORE
4	GOODWIN INTERNATIONAL LTD	U.K.
5	SPX VALVES & CONTROLS (FORMERLY DEZURIK)	U.S.A.
6	SUMITOMO CORPORATION	JAPAN
7	XOMOX LTD U.K.	
8	Z & J TECHNOLOGIES GMBH	GERMANY
98.0	**VALVE PLUG CONCENTRIC- CSS (F.S & N.F.S)**	
1	BDK PROCESS CONTROLS PVT LTD	INDIA
2	CHEMTROL SAMIL (INDIA) PVT LTD	INDIA
3	LARSEN & TOUBRO LTD	INDIA
4	XOMOX SANMAR LIMITED	INDIA
99.0	**VALVE PLUG CONCENTRIC- CCS (F.S & N.F.S)**	
1	BDK PROCESS CONTROLS PVT LTD	INDIA
2	CHEMTROL SAMIL (INDIA) PVT LTD	INDIA
3	LARSEN & TOUBRO LTD	INDIA
4	XOMOX SANMAR LIMITED	INDIA
100.0	**VALVE PLUG CONCENTRIC- CAS(F.S. & N.F.S.)**	
1	XOMOX SANMAR LIMITED	INDIA
101.0	**VALVE PLUG PRESSURE BALANCED (FS)**	
1	LARSEN & TOUBRO LTD	INDIA

SL NO	ITEM / VENDORS	COUNTRY
102.0	**VALVE PLUG PRESSURE BALANCED (NFS)**	
1	ECONO VALVES PVT. LTD.	INDIA
2	LARSEN & TOUBRO LTD	INDIA
103.0	**WELDOLETS/SOCKOLETS/ELBOWLET**	
1	CSA FITTINGS	INDIA
2	EBY FASTENERS	INDIA
3	SIDHARTH & GAUTAM ENGINEERS INDIA	INDIA
4	ULMA FORJA S.COOP.	SPAIN
104.0	**PIPES & TUBULARS TO A.P.I.STANDARDS**	
1	BHEL (TRICHY)	INDIA
2	ISMT LTD-AHMEDNGR	INDIA
3	ISMT LTD-BARAMATI	INDIA
4	JINDAL PIPES LTD	INDIA
5	JINDAL SAW LTD (KOSI WORKS)	INDIA
6	JINDAL SAW LTD (NASHIK WORKS)	INDIA
7	LALIT PROFILES & STEEL INDUSTRIES LTD	INDIA
8	MAHARASHTRA SEAMLESS LTD.	INDIA
9	MAN INDUSTRIES (I) LTD	INDIA
10	MUKAT TANKS & VESSELS LTD	INDIA
11	RATNAMANI METALS & TUBES LTD	INDIA
12	SURINDRA ENGINEERING CO LTD-(MUMBAI)	INDIA
13	SURYA ROSHNI LTD	INDIA
14	WELSPUN GUJARAT STAHL ROHREN LTD.	INDIA
ELECTRICAL EQUIPMENT		
1.0	**A.C.(MV) VARIABLE SPEED DRIVE**	
1	ASEA BROWN BOVERY LIMITED	SWITZERLAND
2	BHEL (BANGALORE)	INDIA
3	EUROTHERM DEL INDIA LIMITED	INDIA
4	FUJI ELECTRIC CO LTD	JAPAN
5	HITACHI LTD (JAPAN)	JAPAN
6	KIRLOSKAR ELECTRIC CO LTD	INDIA
7	LARSEN & TOUBRO LTD	INDIA
8	MEIDENSHA CORP	JAPAN
9	NELCO LTD	INDIA
10	RELIANCE ELECTRIC CO	U.S.A
11	ROCKWELL AUTOMATION INDIA LTD	INDIA
12	SIEMENS AG	GERMANY
13	SIEMENS LIMITED	INDIA
14	SIEMENS-ALLIS ENERGY PRODUCTS INDIA	INDIA
15	TOSHIBA CORPORATION	JAPAN

SL NO	ITEM / VENDORS	COUNTRY
2.0	**ACTUATOR-MOV**	
1	AUMA INDIA LTD	INDIA
2	AUMA RIESTER GMBH & CO. KG	GERMANY
3	BIFFI ITALIA S.R.L	ITALY
4	EIM CONTROLS UK LTD	U.S.A
5	FLO - TORK INC	U.S.A
6	LIMITORQUE INDIA LIMITED	INDIA
7	MARSH ENGINEERS	INDIA
8	ROTORK CONTROLS (INDIA) LTD	INDIA
3.0	**BATTERY-LEAD ACID (FLOODED)**	
1	EXIDE INDUSTRIES LTD.	INDIA
2	KIRLOSKAR BATTERIES LTD	INDIA
4.0	**BATTERY-LEAD ACID (VRLA)**	
1	AMARA RAJA BATTERIES LTD	INDIA
2	EXIDE INDUSTRIES LTD	INDIA
3	HBL NIFE POWER SYSTEMS LTD	INDIA
5.0	**BATTERY-NICKLE CADMIUM**	
1	AMCO SAFT INDIA LIMITED	INDIA
2	HBL NIFE POWER SYSTEMS LTD	INDIA
6.0	**BATTERY CHARGER**	
1	AMARA RAJA POWER SYSTEMS (P) LTD	INDIA
2	CALDYNE AUTOMATICS LTD	INDIA
3	CHHABI ELECTRICALS PVT LIMITED	INDIA
4	DUBAS ENGINEERING PVT LTD	INDIA
5	HBL NIFE POWER SYSTEMS LTD	INDIA
6	KERALA STATE ELECT DEV CORP LTD (KRKULM)	INDIA
7	MASS-TECH CONTROLS PVT LTD	INDIA
8	UNIVERSAL INDUSTRIAL PRODUCTS	INDIA
9	UNIVERSAL INSTRUMENT MFG CO PVT LTD	INDIA
7.0	**CABLE-COMMUNICATION (JELLY FILLED)**	
1	CMI LIMITED	INDIA
2	DELTON CABLES LIMITED	INDIA
3	ELKAY TELELINKS LTD.	INDIA
4	FINOLEX CABLES LTD	INDIA
5	RELIANCE ENGINEERS LIMITED	INDIA
6	VINDHYA TELELINKS LIMITED	INDIA
8.0	**CABLE-FIRE ALARM AND COMMN.**	
1	CMI LIMITED	INDIA
2	CORDS CABLE INDUSTRIES LTD	INDIA
3	DELTON CABLES LIMITED	INDIA

SL NO	ITEM / VENDORS	COUNTRY
4	ELKAY TELELINKS LTD.	INDIA
5	K E I INDUSTRIES LIMITED	INDIA
6	RELIANCE ENGINEERS LIMITED	INDIA
9.0	**CABLE-HIGH VOLTAGE (XLPE)**	
1	INDUSTRIAL CABLES (I) LTD	INDIA
2	NICCO CORPORATION LTD	INDIA
3	POLYCAB WIRES PVT LTD	INDIA
4	TORRENT CABLES LTD	INDIA
5	UNIFLEX CABLES LIMITED	INDIA
6	UNIVERSAL CABLES LTD	INDIA
10.0	**CABLE-MEDIUM VOLTAGE-POWER (PVC)**	
1	ASSOCIATED FLEXIBLES AND WIRES [P] LTD	INDIA
2	FINOLEX CABLES LTD.	INDIA
3	GEMSCAB INDUSTRIES LTD	INDIA
4	INDUSTRIAL CABLES (I) LTD	INDIA
5	K E I INDUSTRIES LIMITED	INDIA
6	NICCO CORPORATION LTD	INDIA
7	POLYCAB WIRES PVT LTD	INDIA
8	RADIANT CABLES PVT LTD	INDIA
9	RAVIN CABLES LTD	INDIA
10	TORRENT CABLES LTD	INDIA
11	UNIVERSAL CABLES LTD	INDIA
11.0	**CABLE-CONTROL (PVC)**	
1	ASSOCIATED CABLES PVT LTD	INDIA
2	ASSOCIATED FLEXIBLES AND WIRES [P] LTD	INDIA
3	CMI LIMITED	INDIA
4	CORDS CABLE INDUSTRIES LTD	INDIA
5	DELTON CABLES LIMITED	INDIA
6	ECKO CABLES PVT LTD	INDIA
7	ELKAY TELELINKS LTD.	INDIA
8	EVERSHINE ELECTRICALS	INDIA
9	FINOLEX CABLES LTD.	INDIA
10	GEMSCAB INDUSTRIES LTD	INDIA
11	GOYOLENE FIBRES (INDIA) PVT LTD	INDIA
12	HAVELL'S INDIA PVT LTD	INDIA
13	INDUSTRIAL CABLES (I) LTD	INDIA
14	K E I INDUSTRIES LIMITED	INDIA
15	NETCO CABLE INDUSTRIES PVT. LTD.	INDIA
16	NICCO CORPORATION LTD	INDIA
17	NORTH EASTERN CABLES PVT LTD	INDIA

SL NO	ITEM / VENDORS	COUNTRY
18	PARAMOUNT COMMUNICATIONS LIMITED	INDIA
19	POLYCAB WIRES PVT LTD	INDIA
20	RADIANT CABLES PVT LTD	INDIA
21	RAVIN CABLES LTD	INDIA
22	RELIANCE ENGINEERS LIMITED	INDIA
23	SUYOG ELECTRICALS LTD	INDIA
24	TORRENT CABLES LTD	INDIA
25	UNIVERSAL CABLES LTD	INDIA
12.0	**CAPACITORS-HIGH VOLTAGE**	
1	ABB LTD (BANGALORE)	INDIA
2	BHEL (BHOPAL)	INDIA
3	KAPSALES ELECTRICALS LTD.	INDIA
4	SHREEM CAPACITORS PVT LTD	INDIA
5	UNIVERSAL CABLES LTD	INDIA
13.0	**CONTROL PANEL (FLP)**	
1	BALIGA LIGHTING EQUIPMENTS (P) LIMITED	INDIA
2	FCG FLAMPROOF CONTROL GEARS P. LTD(C-157	INDIA
3	FCG POWER INDUSTRIES PVT LTD	INDIA
4	FLAMEPROOF EQUIPMENTS PVT.LTD	INDIA
5	FLEXPRO ELECTRICALS PVT LTD	INDIA
6	SUDHIR SWITCHGEARS PVT LTD	INDIA
14.0	**CONTROL STATION- WEATHERPROOF**	
1	BALIGA LIGHTING EQUIPMENTS (P) LIMITED	INDIA
2	BHARTIA INDUSTRIES LTD	INDIA
3	ELECTRICAL EQUIPMENT CORPORATION	INDIA
4	EX-PROTECTA	INDIA
5	FLEXPRO ELECTRICALS PVT LTD INDIA	INDIA
6	PROMPT ENGINEERING WORKS	INDIA
15.0	**CONTROL STATION- FLAME PROOF**	
1	BALIGA LIGHTING EQUIPMENTS (P) LIMITED	INDIA
2	FCG FLAMPROOF CONTROL GEARS P. LTD(C-157	INDIA
3	FCG POWER INDUSTRIES PVT LTD	INDIA
4	FLAMEPROOF EQUIPMENTS PVT.LTD	INDIA
5	FLEXPRO ELECTRICALS PVT LTD	INDIA
6	GOVAN INDUSTRIES (INDIA) P LTD	INDIA
7	PROMPT ENGINEERING WORKS	INDIA
8	SUDHIR SWITCHGEARS PVT LTD	INDIA
16.0	**EPABX SYSTEM**	
1	AVAYA GLOBAL CONNECT LTD (FORM. T-130)	INDIA
2	BPL SYSTEMS AND PROJECTS LTD	INDIA

SL NO	ITEM / VENDORS	COUNTRY
3	SIEMENS LIMITED	INDIA
17.0	**FIRE ALARM SYSTEM**	
1	EDWARD INTERNATIONAL	CANADA
2	HONEYWELL AUTOMATION INDIA LTD-FORM.T115	INDIA
3	HONEYWELL INC.	U.S.A
4	KIDDE INDIA LTD (FMLY VIJAY FIRE-IND)	INDIA
5	MATHER & PLATT PUMPS LTD.	INDIA
6	NEW FIRE ENGINEERS (P) LTD	INDIA
7	SIEMENS BUILDING TECHNOLOGIES	CANADA
18.0	**FLP ELECTRICAL FITTINGS (IMPORTED)**	
1	A.T.X SA	FRANCE
2	R STAHL SCHALTGERATE GMBH	GERMANY
3	VICTOR PRODUCTS PLC	U.K
19.0	**HIGH MAST LIGHTING SYSTEM**	
1	BAJAJ ELECTRICALS LTD	INDIA
2	CROMPTON GREAVES LTD.	INDIA
3	PHILIPS INDIA LIMITED	INDIA
20.0	**JUNCTION BOX (FLAME PROOF)**	
1	BALIGA LIGHTING EQUIPMENTS (P) LIMITED	INDIA
2	FCG FLAMPROOF CONTROL GEARS P. LTD(C-157	INDIA
3	FCG POWER INDUSTRIES PVT LTD	INDIA
4	FLAMEPROOF EQUIPMENTS PVT.LTD	INDIA
5	FLEXPRO ELECTRICALS PVT LTD	INDIA
6	GOVAN INDUSTRIES (INDIA) P LTD	INDIA
7	PROMPT ENGINEERING WORKS	INDIA
8	SUDHIR SWITCHGEARS PVT LTD	INDIA
21.0	**LIGHTING & DISTRIBUTION BOARD (FLP)**	
1	BALIGA LIGHTING EQUIPMENTS (P) LIMITED	INDIA
2	FCG FLAMPROOF CONTROL GEARS P. LTD(C-157	INDIA
3	FCG POWER INDUSTRIES PVT LTD	INDIA
4	FLAMEPROOF EQUIPMENTS PVT.LTD	INDIA
5	FLEXPRO ELECTRICALS PVT LTD	INDIA
6	SUDHIR SWITCHGEARS PVT LTD	INDIA
22.0	**LIGHTING FITTING& ACCESSORIES(HAZARDOUS)**	
1	BAJAJ ELECTRICALS LTD	INDIA
2	BALIGA LIGHTING EQUIPMENTS (P) LIMITED	INDIA
3	FCG FLAMPROOF CONTROL GEARS P. LTD(C-157	INDIA
4	FCG POWER INDUSTRIES PVT LTD	INDIA
5	FLAMEPROOF EQUIPMENTS PVT.LTD	INDIA
6	FLEXPRO ELECTRICALS PVT LTD	INDIA

SL NO	ITEM / VENDORS	COUNTRY
7	GOVAN INDUSTRIES (INDIA) P LTD	INDIA
8	PROMPT ENGINEERING WORKS	INDIA
9	SUDHIR SWITCHGEARS PVT LTD	INDIA
23.0	**MOTOR INDUCTION-MV (INDL.TYPE SAFE AREA)**	
1	ABB LTD (FARIDABAD)	INDIA
2	ALSTOM INDUSTRIAL PRODUCT LTD-FORM.A347A INDIA	INDIA
3	BHARAT BIJLEE LIMITED	INDIA
4	CROMPTON GREAVES LTD	INDIA
5	KIRLOSKAR ELECTRIC CO LTD	INDIA
6	LAXMI HYDRAULICS PVT LTD	INDIA
7	SIEMENS LIMITED	INDIA
24.0	**MOTOR-INDUCTION(HV INCREASED SAFETY ZN2)**	
1	ALSTOM INDUSTRIAL PRODUCT LTD-FORM.A347A	INDIA
2	BHEL (BHOPAL)	INDIA
3	CROMPTON GREAVES LTD	INDIA
4	KIRLOSKAR ELECTRIC CO LTD	INDIA
25.0	**MOTOR-INDUCTION-HV (INDL. TYPE SAFE AREA)**	
1	ABB LTD (BARODA)	INDIA
2	ALSTOM INDUSTRIAL PRODUCT LTD-FORM.A347A INDIA	INDIA
3	BHEL(BHOPAL)	INDIA
4	CROMPTON GREAVES LTD.	INDIA
5	KIRLOSKAR ELECTRIC CO LTD	INDIA
26.0	**MOTOR-INDUCTION-M.V (FLAME PROOF)**	
1	ALSTOM INDUSTRIAL PRODUCT LTD-FORM.A347A	INDIA
2	BHARAT BIJLEE LIMITED	INDIA
3	CROMPTON GREAVES LTD.	INDIA
4	KIRLOSKAR ELECTRIC CO LTD	INDIA
27.0	**MOTOR-INDUCTION-M.V (ZONE 2-TYPE e & n)**	INDIA
1	ABB LTD (FARIDABAD)	INDIA
2	ALSTOM INDUSTRIAL PRODUCT LTD-FORM.A347A	INDIA
3	BHARAT BIJLEE LIMITED	INDIA
4	CROMPTON GREAVES LTD.	INDIA
5	KIRLOSKAR ELECTRIC CO LTD	INDIA
6	SIEMENS LIMITED	INDIA
28.0	**MOTOR-SYNCHRONOUS-H.V.**	INDIA
1	BHEL (BHOPAL)	INDIA
2	KIRLOSKAR ELECTRIC CO LTD	INDIA
29.0	**MOTORS – IMPORTED**	
1	ASEA BROWN BOVERY LIMITED	SWITZERLAND

SL NO	ITEM / VENDORS	COUNTRY
2	ASI ROBICON SPA (FORMERLY ANSALDO)	ITALY
3	FUJI ELECTRIC CO LTD	JAPAN
4	HITACHI LTD (JAPAN) JAPAN	JAPAN
5	JEUMONT SA / FRAMATONE ANP	FRANCE
6	LOHER GMBH	GERMANY
7	SIEMENS AG	GERMANY
8	TOSHIBA CORPORATION	JAPAN
9	WEG EXPORTADORA S.A.	BRAZIL
30.0	**NEUTRAL GROUNDING RESISTOR-H.V.**	
1	BHARTIA INDUSTRIES LTD	INDIA
2	RESITECH ELECTRICALS PVT LTD	INDIA
3	RSI SWITCHGEAR PVT LTD	INDIA
4	S.R. NARKHEEDE ENGINEERING PVT LTD	INDIA
31.0	**PLANT COMMUNICATION SYSTEM**	
1	INDUSTRONIC GMBH	GERMANY
2	NEUMAN ELEKTRONIK GMBH & CO	GERMANY
3	SIEMENS AG	GERMANY
32.0	**PLUGS/SOCKETS/HANDLAMPS (FLAME PROOF)**	
1	BALIGA LIGHTING EQUIPMENTS (P) LIMITED	INDIA
2	FCG FLAMPROOF CONTROL GEARS P. LTD(C-157	INDIA
3	FCG POWER INDUSTRIES PVT LTD	INDIA
4	FLAMEPROOF EQUIPMENTS PVT.LTD	INDIA
5	FLEXPRO ELECTRICALS PVT LTD	INDIA
6	GOVAN INDUSTRIES (INDIA) P LTD	INDIA
7	SUDHIR SWITCHGEARS PVT LTD	INDIA
33.0	**RELAY & CONTROL PANEL**	
1	ABB LTD (BANGALORE)	INDIA
2	AREVA T & D INDIA LTD (T&D GROUP)	INDIA
3	EASUN REYROLLE LTD	INDIA
4	ENPRO INDUSTRIAL AUTOMATION PVT LTD	INDIA
34.0	**SWITCH BOARD FIXED FOR PACKAGE EQUIPTS**	
1	ACCUSONIC CONTROLS PVT LTD	INDIA
2	DHARIA SWITCHGEAR & CONTROL	INDIA
3	HINDUSTAN CONTROLS & EQUIPMENT PVT. LTD.	INDIA
4	M.K. ENGINEERS & CONTROLS PVT. LTD.	INDIA
5	POPULAR SWITCHGEARS PVT LTD	INDIA
6	POSITRONICS PVT LTD	INDIA
7	TRICOLITE ELECTRICAL INDUSTRIES PVT LTD	INDIA
8	UNITED ELECTRIC CO (DELHI) PVT LTD	INDIA
9	VIDHYUT CONTROL (INDIA) PVT LTD	INDIA

SL NO	ITEM / VENDORS	COUNTRY
10	ZENITH ENGINEERING CORP.	INDIA
35.0	**SWITCH BOARD-HV(INDOOR) WITH SF6 BREAKER**	
1	ABB LTD (NASIK)	INDIA
36.0	**SWITCH BOARD-M.V.-MCC/PCC/PMCC-DRAWOUT**	
1	BHARTIA INDUSTRIES LTD	INDIA
2	CONTROLS & SCHEMATICS LTD	INDIA
3	CONTROLS & SWITCHGEAR CO LTD	INDIA
4	GE INDIA INDUSTRIAL PVT LTD	INDIA
5	LARSEN & TOUBRO LTD	INDIA
6	SCHNEIDER ELECTRIC INDIA PVT LTD	INDIA
7	SIEMENS LIMITED	INDIA
37.0	**SWITCH BOARD-MV:MCC/ASB/LDB-FIXED TYP**	
1	BHARTIA INDUSTRIES LTD	INDIA
2	CONTROLS & SCHEMATICS LTD	INDIA
3	CONTROLS & SWITCHGEAR CO LTD	INDIA
4	GE INDIA INDUSTRIAL PVT LTD	INDIA
5	LARSEN & TOUBRO LTD	INDIA
6	M.K. ENGINEERS & CONTROLS PVT. LTD.	INDIA
7	SCHNEIDER ELECTRIC INDIA PVT LTD	INDIA
8	SIEMENS LIMITED	INDIA
38.0	**SWITCH BOARD:HV(INDOOR) WITH VCB**	
1	ABB LTD (NASIK)	INDIA
2	ALUMINIUM INDUSTRIES LTD. (ALIND)	INDIA
3	AREVA T & D INDIA LTD (T&D GROUP)	INDIA
4	BHEL (BHOPAL)	INDIA
5	CROMPTON GREAVES LTD.	INDIA
6	JYOTI LIMITED	INDIA
7	SIEMENS LIMITED	INDIA
39.0	**SYNCHRONOUS GENERATOR (HV)**	INDIA
1	ANSALDO ENERGIA SPA	ITALY
2	ASEA BROWN BOVERY LIMITED	SWITZERLAND
3	AVK DEUTSCHLAND GMBH & CO. KG	GERMANY
4	FUJI ELECTRIC CO LTD	JAPAN
5	JEUMONT SA / FRAMATONE ANP	FRANCE
6	MEIDENSHA CORP	JAPAN
7	NUOVO PIGNONE SPA (ITALY) (GE OILCO.)	ITALY
8	SIEMENS AG	GERMANY
9	TOSHIBA CORPORATION	JAPAN
10	TOYO DENKI SEIZO K.K.	JAPAN
40.0	**SYNCHRONOUS GENERATOR (MV)**	

SL NO	ITEM / VENDORS	COUNTRY
1	CROMPTON GREAVES LTD.	INDIA
2	LEROY SOMAR& CONTROLS INDIA PVT. LTD	INDIA
3	NEWAGE ELECTRICAL INDIA LTD	INDIA
41.0	**TRANSFORMER-DISTRIBUTION (DRY TYPE)**	
1	BHEL JHANSI	INDIA
2	VOLTAMP TRANSFORMERS (P) LTD	INDIA
42.0	**TRANSFORMER-DISTRIBUTION-UPTO 5MVA**	
1	AREVA T & D INDIA LTD (T&D GROUP)	INDIA
2	CROMPTON GREAVES LTD.	INDIA
3	EMCO LIMITED	INDIA
4	INDO TECH TRANSFORMERS LIMITED	INDIA
5	KANOHAR ELECTRICAL PVT. LTD.	INDIA
6	TRANSFORMERS & RECTIFIERS (I) LTD	INDIA
7	VIJAI ELECTRICALS LTD.	INDIA
8	VOLTAMP TRANSFORMERS (P) LTD	INDIA
43.0	**TRANSFORMER-POWER-ABOVE 5MVA**	
1	AREVA T & D INDIA LTD (T&D GROUP)	INDIA
2	BHARAT BIJLEE LIMITED	INDIA
3	BHEL JHANSI	INDIA
4	CROMPTON GREAVES LTD.	INDIA
5	EMCO LIMITED	INDIA
6	KANOHAR ELECTRICAL PVT. LTD.	INDIA
7	KIRLOSKAR ELECTRIC CO LTD	INDIA
8	SIEMENS LIMITED	INDIA
9	TRANSFORMERS & ELECTRICALS KERALA LTD	INDIA
10	VIJAI ELECTRICALS LTD.	INDIA
11	VOLTAMP TRANSFORMERS (P) LTD	INDIA
44.0	**U.P.S.SYSTEM**	
1	CHLORIDE INDUSTRIAL SYSTEMS	FRANCE
2	DB POWER ELECTRONICS (P) LTD	INDIA
3	EMERSON NETWORK POWER (I) PVT LTD	INDIA
4	FUJI ELECTRIC CO LTD	JAPAN
5	GUTOR ELECTRONICS LTD	SWITZERLAND
6	HI-REL ELECTRONICS PVT LTD.	INDIA
7	KERALA STATE ELECT DEV CORP LTD (KRKULM)	INDIA
8	MGE ASIA PTE LTD	SINGAPORE
9	SAFT NIFE AB	SWEDEN
10	TOSHIBA CORPORATION	JAPAN
ELECTRICAL COMPONENTS		
1.0	**AIR CIRCUIT BREAKER**	

SL NO	ITEM / VENDORS	COUNTRY
1	CONTROLS & SWITCHGEAR CO LTD	INDIA
2	GE INDIA INDUSTRIAL PVT LTD	INDIA
3	LARSEN & TOUBRO LTD	INDIA
4	SCHNEIDER ELECTRIC INDIA PVT LTD	INDIA
5	SIEMENS LIMITED	INDIA
2.0	**AUX. RELAY**	
1	ABB LTD (BANGALORE)	INDIA
2	AREVA T & D INDIA LTD (T&D GROUP)	INDIA
3.0	**BIMETAL RELAY**	
1	ABB LTD (BANGALORE)	INDIA
2	BHARTIA INDUSTRIES LTD	INDIA
3	CONTROLS & SWITCHGEARS CONTACTORS LTD	INDIA
4	LARSEN & TOUBRO LTD	INDIA
5	SCHNEIDER ELECTRIC INDIA PVT LTD	INDIA
6	SIEMENS LIMITED	INDIA
4.0	**BUCHHOLZ RELAY**	
1	A J SERVICES	INDIA
2	ATVUS INDUSTRIES	INDIA
5.0	**BUS DUCT (H.V.)**	
1	BHEL JHANSI	INDIA
2	CONTROLS & SWITCHGEAR CO LTD	INDIA
3	NARMADA SWITCHGEAR PVT. LTD	INDIA
4	STARDRIVE BUSDUCTS PVT LTD	INDIA
5	UNITED ELECTRIC CO (DELHI) PVT LTD	INDIA
6.0	**BUS DUCT (M.V.)**	
1	CONTROLS & SWITCHGEAR CO LTD	INDIA
2	ENPRO ENGINEERING	INDIA
3	GLOBE ELECTRICAL INDUSTRIES	INDIA
4	M.K. ENGINEERS & CONTROLS PVT. LTD.	INDIA
5	NARMADA SWITCHGEAR PVT. LTD	INDIA
6	STARDRIVE BUSDUCTS PVT LTD	INDIA
7	UNITED ELECTRIC CO (DELHI) PVT LTD	INDIA
7.0	**CABLE GLAND (HAZARDOUS AREA)**	
1	BALIGA LIGHTING EQUIPMENTS (P) LIMITED	INDIA
2	COMET BRASS PRODCUTS	INDIA
3	COMET INDUSTRIES	INDIA
4	FCG FLAMPROOF CONTROL GEARS P. LTD (C-157)	INDIA
5	FCG POWER INDUSTRIES PVT LTD	INDIA
6	FLAMEPROOF EQUIPMENTS PVT.LTD	INDIA
7	FLEXPRO ELECTRICALS PVT LTD	INDIA

SL NO	ITEM / VENDORS	COUNTRY
8	PROMPT ENGINEERING WORKS	INDIA
9	STANDARD METAL INDUSTRIES	INDIA
10	SUDHIR SWITCHGEARS PVT LTD	INDIA
8.0	**CABLE TERMN. & JOINTING KIT**	
1	MAHINDRA ENGG. & CHEMICAL PRODUCTS LTD	INDIA
2	RAYCHEM RPG LIMITED	INDIA
3	REPL ENGINEERING LIMITED	INDIA
4	YAMUNA GASES & CHEMICALS LTD	INDIA
9.0	**CONTACTOR**	
1	ABB LTD (BANGALORE)	INDIA
2	BHARTIA INDUSTRIES LTD	INDIA
3	CONTROLS & SWITCHGEARS CONTACTORS LTD	INDIA
4	GE INDIA INDUSTRIAL PVT LTD	INDIA
5	LARSEN & TOUBRO LTD	INDIA
6	SCHNEIDER ELECTRIC INDIA PVT LTD	INDIA
7	SIEMENS LIMITED	INDIA
10.0	**BREAKER CONTROL SWITCH**	
1	AREVA T & D INDIA LTD (T&D GROUP)	INDIA
2	RELIABLE ELECTRONIC COMPONENTS PVT LTD	INDIA
3	SWITRON DEVICES	INDIA
11.0	**CONTROL SWITCH / SELECTOR SWITCH**	
1	AREVA T & D INDIA LTD (T&D GROUP)	INDIA
2	HAVELL'S INDIA PVT LTD	INDIA
3	HOTLINE SWITCHGEAR & CONTROLS	INDIA
4	KAYCEE INDUSTRIES LTD.	INDIA
5	LARSEN & TOUBRO LTD	INDIA
6	RELIABLE ELECTRONIC COMPONENTS PVT LTD	INDIA
7	SIEMENS LIMITED	INDIA
8	SWITRON DEVICES	INDIA
12.0	**EARTH LEAKAGE CIRCUIT BREAKER**	
1	DATAR SWITCHGEAR PVT LTD.	INDIA
2	INDO ASIAN FUSEGEAR LTD	INDIA
3	LEGRAND (INDIA) PVT. LTD (FORM. M-006)	INDIA
13.0	**FUSE SWITCH COMBINATION**	
1	ABB LTD (BANGALORE)	INDIA
2	CONTROLS & SWITCHGEAR CO LTD	INDIA
3	HAVELL'S INDIA PVT LTD	INDIA
4	INDO ASIAN FUSEGEAR LTD	INDIA
5	LARSEN & TOUBRO LTD	INDIA
6	SCHNEIDER ELECTRIC INDIA PVT LTD	INDIA

SL NO	ITEM / VENDORS	COUNTRY
7	SIEMENS LIMITED	INDIA
8	STANDARD ELECTRICALS LTD	INDIA
14.0	**FUSE**	
1	GE INDIA INDUSTRIAL PVT LTD	INDIA
2	INDO ASIAN FUSEGEAR LTD	INDIA
3	LARSEN & TOUBRO LTD	INDIA
4	SIEMENS LIMITED	INDIA
15.0	**HEAT TRACER**	
1	THERMON HEAT TRACERS PVT. LTD.	INDIA
16.0	**HEAVY DUTY SWITCH**	
1	CONTROLS & SWITCHGEAR CO LTD	INDIA
2	INDO ASIAN FUSEGEAR LTD	INDIA
3	LARSEN & TOUBRO LTD	INDIA
4	SCHNEIDER ELECTRIC INDIA PVT LTD	INDIA
5	SIEMENS LIMITED	INDIA
17.0	**INSTRUMENT TRANSFORMER (CT/PT)-MV**	
1	GILBERT & MAXWELL ELECTRICALS PVT LTD	INDIA
2	KALPA ELECTRIKAL PVT LTD	INDIA
3	KAPPA ELECTRICALS	INDIA
4	NARAYAN POWERTECH PVT LTD	INDIA
5	PRAGATI ELECTRICALS PVT LTD	INDIA
6	PRECISE ELECTRICALS	INDIA
	SILKAANS ELECTRICALS MFG.CO.PVT.LTD	INDIA
18.0	**INSTRUMENT TRANSFORMERS (CT/PT) HV**	
1	ABB LTD (BARODA)	INDIA
2	AREVA T & D INDIA LTD (T&D GROUP)	INDIA
3	ELECTRICAL CONTROLS & SYSTEMS	INDIA
4	KALPA ELECTRIKAL PVT LTD	INDIA
5	KAPPA ELECTRICALS	INDIA
6	PRAGATI ELECTRICALS PVT LTD	INDIA
19.0	**ISOLATOR/LOAD BREAK SWITCH (HV INDOOR)**	
1	PANICKKER SWITCHGEAR LTD.(FORM. D-022)	INDIA
2	SIEMENS LIMITED	INDIA
20.0	**LIGHTING & POWER PANEL**	
1	CONTROLS & SWITCHGEAR CO LTD	INDIA
2	HAVELL'S INDIA PVT LTD	INDIA
3	INDO ASIAN FUSEGEAR LTD	INDIA
4	STANDARD ELECTRICALS LTD	INDIA
21.0	**LIGHTING FIX. FOR NON HAZRDOUS AREA**	
1	BAJAJ ELECTRICALS LTD	INDIA

SL NO	ITEM / VENDORS	COUNTRY
2	CROMPTON GREAVES LTD.	INDIA
3	PHILIPS INDIA LIMITED	INDIA
22.0	**LIGHTING TRANSFORMER**	
1	AUTOMATIC ELECTRIC LTD.	INDIA
2	INDCOIL TRANSFORMERS PVT LTD	INDIA
3	KAPPA ELECTRICALS INDIA	INDIA
4	VOLTAMP TRANSFORMERS (P) LTD	INDIA
23.0	**LIGHTNING ARRESTOR**	
1	CROMPTON GREAVES LTD.	INDIA
2	ELPRO INTERNATIONAL LIMITED	INDIA
3	OBLUM ELECTRICAL INDUSTRIES (P) LTD	INDIA
4	W.S. INSULATOR OF INDIA	INDIA
24.0	**MAGNETIC OIL LEVEL GAUGE**	
1	INSTRUMENT & CONTROLS	INDIA
2	SUKRUT UDYOG	INDIA
25.0	**MCB**	
1	DATAR SWITCHGEAR PVT LTD.	INDIA
2	HAVELL'S INDIA PVT LTD	INDIA
3	INDIANA CURRENT CONTROL LTD	INDIA
4	INDO ASIAN FUSEGEAR LTD	INDIA
5	LEGRAND (INDIA) PVT. LTD (FORM. M-006)	INDIA
6	STANDARD ELECTRICALS LTD	INDIA
26.0	**MCCB**	
1	GE INDIA INDUSTRIAL PVT LTD	INDIA
2	LARSEN & TOUBRO LTD	INDIA
3	SCHNEIDER ELECTRIC INDIA PVT LTD	INDIA
27.0	**METER**	
1	AREVA T & D INDIA LTD (T&D GROUP)	INDIA
2	AUTOMATIC ELECTRIC LTD.	INDIA
3	MECO INSTRUMENTS PVT LTD	INDIA
4	NIPPEN ELECTRICAL INSTRUMENTS CO.	INDIA
5	RISHABH INSTRUMENTS PVT LTD	INDIA
28.0	**OIL TEMPERATURE INDICATOR**	
1	PERFECT CONTROLS	INDIA
2	PRECIMEASURE CONTROLS PVT.LTD.	INDIA
29.0	**ON LOAD TAP CHANGER**	
1	BHEL (BHOPAL)	INDIA
2	CROMPTON GREAVES LTD.	INDIA
3	CTR MANUFACTURING INDUSTRIES LTD	INDIA
4	EASUN-MR TAP CHANGERS P LTD	INDIA

SL NO	ITEM / VENDORS	COUNTRY
5	ON LOAD GEARS	INDIA
6	TRANSFORMERS & ELECTRICALS KERALA LTD	INDIA
30.0	**PROTECTION RELAY**	
1	ABB LTD (BARODA)	INDIA
2	AREVA T & D INDIA LTD (T&D GROUP)	INDIA
3	EASUN REYROLLE LTD	INDIA
4	LARSEN & TOUBRO LTD	INDIA
5	SCHNEIDER ELECTRIC INDIA PVT LTD	INDIA
6	SIEMENS LIMITED	INDIA
31.0	**PUSH BUTTON AND INDICATING LAMP**	
1	BHARTIA INDUSTRIES LTD	INDIA
2	CONTROLS & SWITCHGEARS CONTACTORS LTD	INDIA
3	HOTLINE SWITCHGEAR & CONTROLS	INDIA
4	LARSEN & TOUBRO LTD	INDIA
5	PRECIFINE PRODUCTS PVT. LTD.	INDIA
6	SCHNEIDER ELECTRIC INDIA PVT LTD	INDIA
7	SHRI TULSI SWITCHGEARS PVT LTD	INDIA
8	SIEMENS LIMITED	INDIA
9	TEKNIC CONTROLS	INDIA
32.0	**TIMER**	
1	BHARTIA INDUSTRIES LTD	INDIA
2	ELECTRONIC AUTOMATION PVT LTD	INDIA
3	LARSEN & TOUBRO LTD	INDIA
4	SIEMENS LIMITED	INDIA
33.0	**VAC BOTTLE**	
1	AREVA T & D INDIA LTD (T&D GROUP)	INDIA
2	CROMPTON GREAVES LTD.	INDIA
34.0	**WINDING TEMPERATURE INDICATOR**	
1	PERFECT CONTROLS	INDIA
2	PRECIMEASURE CONTROLS PVT.LTD.	INDIA
INSTRUMENTATION - I		
1.0	**AMBIENT AIR ANALYSER SYSTEMS**	
1	ARJAY ENGINEERING LTD	CANADA
2	CASELLA MONITOR EUROPE LTD.	SCOTLAND
3	ENVIRONMENT S.A.	FRANCE
4	FORNEY CORPORATION	U.S.A
5	OPSIS AB	SWEDEN
6	SERES	FRANCE
7	SIEMENS AG	GERMANY

SL NO	ITEM / VENDORS	COUNTRY
8	SIGNAL GROUP LTD	ENGLAND
9	TELEDYNE MONITOR LABS (FORM. M-679)	U.S.A
10	THERMO ELECTRON CORPORATION-USA U.S.A	U.S.A
2.0	**ANALYSER SHELTER**	
1	ABB LTD-BANGALORE	INDIA
2	CHEMTROLS ENGINEERING LTD	INDIA
3	EMERSON PROCESS MANAGEMENT INDIA PVT LTD	INDIA
3.0	**ANALYSER SYSTEMS**	
1	ABB AUTOMATION LTD	U.K
2	ABB LTD-BANGALORE	INDIA
3	EMERSON PROCES MGMT ASIA PACIFIC PTE LTD	SINGAPORE
4	EMERSON PROCESS MANAGEMENT INDIA PVT LTD	INDIA
5	HAMILTON SUNDSTRAND CORPORATION	U.S.A
6	SERVOMEX PLC	U.K
7	SIEMENS AG	GERMANY
8	TELEDYNE ANALYTICAL INSTRUMENTS	U.S.A
9	YOKOGAWA ELECTRIC CORPORATION	INDIA
10	YOKOGAWA INDIA LIMITED	INDIA
4.0	**AIR FILTER REGULATORS**	
1	ABB LTD (FARIDABAD)	INDIA
2	DIVYA CONTROL ELEMENTS PVT LTD	INDIA
3	JANATICS INDIA PVT LTD	INDIA
4	PLACKA INSTRUMENTS INDIA P LTD	INDIA
5	SCHRADER DUNCAN LIMITED	INDIA
6	SHAH PNEUMATICS	INDIA
7	SHAVO NORGREN (I) PVT LTD	INDIA
8	V AUTOMAT & INSTRUMENTS PVT LTD	INDIA
9	VELJAN HYDRAIR PVT LTD	INDIA
5.0	**AUTOMATIC GAS SAMPLER**	
1	JISKOOT AUTOCONTROLS LTD	U.K.
6.0	**CONTROL VALVES (MR NO.X330)**	
1	ARCA REGLER GMBH	GERMANY
2	CONTINENTAL VALVE LTD INDIA	INDIA
3	DRESSER PRODUITS INDUSTRIELS	FRANCE
4	DRESSER VALVE INDIA PVT LTD	INDIA
5	FISHER SANMAR LIMITED	INDIA
6	FLOWSERVE PTE LTD	SINGAPORE
7	FORBES MARSHALL ARCA P LTD.(FORMRLY A214	INDIA
8	INSTRUMENTATION LTD. (PALGHAT)	INDIA
9	ITALVALV S.N.C	ITALY

SL NO	ITEM / VENDORS	COUNTRY
10	KENT INTROL PVT. LTD.(FORM. A-333) INDIA	INDIA
11	KENT INTROL UK LTD (FORM. A-718)	U.K.
12	KOSO FLUID CONTROLS (PVT) LTD INDIA	INDIA
13	METSO AUTOMATION PTE LTD(FORMERLY NELES)	U.K.
14	MIL CONTROLS LIMITED INDIA	INDIA
15	MOTOYAMA ENGG WORKS LTD	JAPAN
16	NUOVO PIGNONE SPA (ITALY) (GE OILCO.)	ITALY
17	SAMSON AG MESS-UND REGELTECHNIK	GERMANY
18	SAMSON CONTROLS PVT LTD INDIA	INDIA
19	SEVERN GLOCON LTD	U.K.
20	SPX VALVES & CONTROLS (FORMERLY DEZURIK)	U.S.A.
21	WEIR VALVES & CONTROLS UK LTD	U.K.
7.0	**COPPER TUBES(COATED,BARE)(MR NO.X700)**	
1	ALCOBEX METALS (PVT) LTD	INDIA
2	RAJCO METAL INDUSTRIES P LTD(FORM.H092)	INDIA
8.0	**DESUPERHEATERS & PRDS (MR NO.X440)**	
1	ARCA REGLER GMBH	GERMANY
2	CCI VALVE TECHNOLOGY AB (FORMERLY B-706)	SWEDEN
3	FORBES MARSHALL ARCA P LTD.(FORMRLY A214	
4	HOLTER REGELARMATURE N GMBH &CO.KG(HORA)	GERMANY
5	IMTECH SYSTEMS BV (FORMERLY KIEKENS BV)	NETHERLANDS
6	INSTRUMENTATION LTD.	PALGHAT)
7	MAZDA LIMITED	INDIA
8	SAMSON AG MESS-UND REGELTECHNIK	GERMANY
9	SPX VALVES & CONTROLS	U.K.
10	WEIR VALVES & CONTROLS UK LTD	U.K.
11	YARWAY CORPORATION	U.S.A.
9.0	**DIFFERENTIAL PRESSURE GAUGES**	
1	AN INSTRUMENTS PVT LTD	INDIA
2	GENERAL INSTRUMENTS CONSORTIUM	INDIA
3	HIRLEKAR PRECISION ENGINEERING PVT LTD	INDIA
4	SAMSON CONTROLS PVT LTD	INDIA
5	SWITZER INSTRUMENT LTD	INDIA
6	WAAREE INSTRUMENTS LIMITED	INDIA
7	WIKA INSTRUMENTS INDIA PVT LTD	INDIA
10.0	**DRAFT GAUGES (MR NO. X110)**	
1	AN INSTRUMENTS PVT LTD	INDIA
2	BADOTHERM PROCESS INSTRUMENTS B.V.	NETHERLANDS
3	BOURDON HAENNI S.A	FRANCE
4	BUDENBERG GAUGE CO. LTD	U.K.

SL NO	ITEM / VENDORS	COUNTRY
5	DRESSER INC.	U.S.A.
6	GENERAL INSTRUMENTS CONSORTIUM	INDIA
7	NAGANO KEIKI SEISAKUSHO LTD	JAPAN
8	SWITZER INSTRUMENT LTD	INDIA
9	WIKA ALEXANDER WIEGAND & CO GMBH	GERMANY
11.0	**FLOW ELEMENTS (VENTURI, FLOW NOZZLES)**	
1	FMC MEASUREMENT SOLUTIONS-UK	U.K.
2	GENERAL INSTRUMENTS CONSORTIUM	INDIA
3	INSTRUMENTATION LTD. (PALGHAT)	INDIA
4	MICRO PRECISION PRODUCTS PVT LTD	INDIA
5	STAR-MECH CONTROLS (INDIA) PVT LTD	INDIA
6	TM TECNOMATIC SPA	ITALY
12.0	**GAS CHROMATOGRAPH (PROCESS)**	
1	ABB AUTOMATION LTD	U.K.
2	ABB LTD- BANGALORE	INDIA
3	EMERSON PROCES MGMT ASIA PACIFIC PTE LTD	SINGAPORE
4	EMERSON PROCESS MANAGEMENT INDIA PVT LTD	INDIA
5	HAMILTON SUNDSTRAND CORPORATION	U.S.A.
6	ORTHODYNE S.A.	BELGIUM
7	SIEMENS AG	GERMANY
8	THERMO ELECTRON CORPORATION	U.S.A.
9	YOKOGAWA ELECTRIC CORPORATION	JAPAN
10	YOKOGAWA INDIA LIMITED	INDIA
13.0	**GAS DETECTION SYSTEMS**	
1	CHEMTROLS ENGINEERING LTD	INDIA
2	CROWCON DETECTION INSTRUMENTS LTD	U.K.
3	DETECTION INSTRUMENTS (I) PVT. LTD. INDIA	INDIA
4	DETECTOR ELECTRONICS CORPORATION	U.S.A.
5	DRAGER SAFETY AG & CO. KGAA	GERMANY
6	GENERAL MONITORS IRELAND LTD	U.K.
7	HONEYWELL ANALYTICS (FORM. Z-512)	U.K.
8	MINE SAFETY APPLIANCES COMPANY	U.S.A.
9	MSA (INDIA) LTD	INDIA
10	OLDHAM FRANCE S.A.	FRANCE
11	RIKEN KEIKI CO LTD	JAPAN
12	SIMRAD OPTRONICS ICARE (FORM. I-556)	FRANCE
14.0	**INSTRUMENT VALVES & MANIFOLDS (MR NO.X730)**	
1	ANDERSON GREENWOOD CROSBY	U.S.A.
2	ASTEC VALVES & FITTINGS PVT. LTD.	INDIA
3	AURA INC	INDIA

SL NO	ITEM / VENDORS	COUNTRY
4	AUTOCLAVE ENGINERS FLUID COMPONENTS	U.S.A.
5	CHEMTROLS ENGINEERING LTD	INDIA
6	CIRCOR INSTRUMENTATION LTD(FORM. H608)	U.K.
7	EXCEL HYDRO PNEUMATICS PVT LTD	INDIA
8	EXCELSIOR ENGG. WORKS	INDIA
9	HAM-LET (ISRAEL-CANADA) LTD.	ISRAEL
10	HYD-AIR ENGG. WORKS LONAVLA	INDIA
11	MICRO PRECISION PRODUCTS PVT LTD	INDIA
12	PARKER HANNIFIN CORPORATION	U.S.A.
13	PRECISION ENGINEERING INDUSTRIES	INDIA
14	PRIME ENGINEERS	INDIA
15	SWAGELOK CO.	U.S.A.
16	SWASTIK ENGINEERING WORKS INDIA	INDIA
17	TECNOMATIC INDIA PVT LTD INDIA	INDIA
15.0	**LEVEL SWITCHES (DISPLACER/FLOAT) (MR.X210)**	
1	BLISS ANAND PVT LTD	INDIA
2	CHEMTROLS ENGINEERING LTD	INDIA
3	DAG PROCESS INSTRUMENTS	INDIA
4	EMERSON PROCES MGMT ASIA PACIFIC PTE LTD	SINGAPORE
5	ENDRESS+HAUSER JAPAN CO. LTD (FORM S-522)	JAPAN
6	JRU CONTTROL PVT LTD	INDIA
7	KROHNE MESSTECHNIK GMBH & CO KG	GERMANY
8	KSR KUEBLER NIVEAUMESS-TECHNIK AG	GERMANY
9	LEVCON INSTRUMENTS PVT LTD	INDIA
10	MAGNETROL INTERNATIONAL N.V	BELGIUM
11	MOBREY LTD (FORM. S-578)	ENGLAND
12	SBEM PVT LTD	INDIA
13	SIGMA INSTRUMENTS CO	INDIA
14	SOR INC	U.S.A
15	TOKYO KEISO CO LTD	JAPAN
16	TRANSDUCERS AND CONTROLS PVT LTD	INDIA
17	V AUTOMAT & INSTRUMENTS PVT LTD	INDIA
16.0	**ON-OFF VALVES (MR NO.X450)**	
1	CONTINENTAL VALVE LTD INDIA	INDIA
2	COOPER CAMERON (SINGAPORE) PTE LTD.	U.S.A.
3	COOPER CAMERON VALV ITALY SRL-FRM D659	ITALY
4	EL-O-MATIC INDIA (PVT) LTD.	INDIA
5	FLOWSERVE PTE LTD	INDIA
6	HINDLE COCKBURNS LIMITED	U.K.
7	INSTRUMENTATION LTD. (PALGHAT)	INDIA

SL NO	ITEM / VENDORS	COUNTRY
8	ITALVALV S.N.C	ITALY
9	KITAMURA VALVE MANUFACTURING CO LTD	JAPAN
10	KITZ CORPORATION OF EUROPE S.A.	SPAIN
11	KOSO FLUID CONTROLS (PVT) LTD	INDIA
12	METSO AUTOMATION PTE LTD(FORMERLY NELES)	U.K.
13	MICROFINISH VALVES PVT LIMITED	INDIA
14	MOTOYAMA ENGG WORKS LTD	JAPAN
15	NUOVO PIGNONE SPA (ITALY) (GE OILCO.)	ITALY
16	PIBIVIESSE S.P.A.	ITALY
17	SAMSON AG MESS-UND REGELTECHNIK	GERMANY
18	SPX VALVES & CONTROLS (FORMERLY DEZURIK)	U.S.A.
19	TYCO VALVES & CONTROLS (VALVATRON)	U.S.A.
20	TYCO VALVES & CONTROLS INDIA PVT LTD	INDIA
21	VIRGO ENGINEERS LIMITED	INDIA
22	WEIR VALVES & CONTROLS UK LTD	U.K.
17.0	**OPTICAL FIBRE CABLE & ASSOC. ITEM MR X480**	
1	ABB INDUSTRI AS	NORWAY
2	BIRLA ERICSSON OPTICAL LIMITED	INDIA
3	FINOLEX CABLES LTD.	INDIA
4	HIMACHAL FUTIRISTIC COMMUNICATIONS LTD	INDIA
5	KABEL RHEYDT	GERMANY
6	PIRELLI CAVI SPA	ITALY
7	STERLITE OPTICAL TECHNOLOGIES LTD	INDIA
8	U M CABLES LTD	INDIA
9	UNIFLEX CABLES LIMITED	INDIA
10	VINDHYA TELELINKS LIMITED I	INDIA
18.0	**ORIFICE PLATES & FLANGES (MR NO. X320)**	
1	BALIGA LIGHTING EQUIPMENTS (P) LIMITED	INDIA
2	DANIEL MEASURMNT & CONTROL ASIA PACIFIC	U.S.A.
3	EUREKA INDUSTRIAL EQUIPMENTS (P) LTD.	INDIA
4	FMC MEASUREMENT SOLUTIONS-UK	U.K.
5	GENERAL INSTRUMENTS CONSORTIUM	INDIA
6	GURU NANAK ENGG WORKS	INDIA
7	INSTRUMENTATION LTD. (PALGHAT)	INDIA
8	JRU CONTTROL PVT LTD	INDIA
9	MICRO PRECISION PRODUCTS PVT LTD	INDIA
10	PETROL VALVES SRL	ITALY
11	PIETRO FIORENTINI SPA ITALY	ITALY
12	STAR-MECH CONTROLS (INDIA) PVT LTD	INDIA
13	TM TECNOMATIC SPA	ITALY

SL NO	ITEM / VENDORS	COUNTRY
19.0	**PILOT OPERATED SAFETY VALVE(MR-X560)**	
1	ANDERSON GREENWOOD CROSBY	U.S.A.
2	CURTISS WRIGHT FLOW CONTROL CORPORATION USA,	CANADA/UK
3	DRESSER INC.	U.S.A.
4	SAFETY SYSTEMS UK LTD	U.K.
5	TAI MILANO SPA	ITALY
6	TYCO SANMAR LTD INDIA	INDIA
7	WEIR VALVES & CONTROLS FRANCE (FORM S791)	FRANCE
20.0	**PR.REGULATOR & SLAM SHUT VALVE (MR X190)**	
1	ELSTER-INSTROMET NV-FORMER. I563	BELGIUM
2	EMERSON PROCES MGMT ASIA PACIFIC PTE LTD	SINGAPORE
3	GORTER CONTROLS B.V.	NETHERLANDS
4	MOKVELD VALVES BV	NETHERLANDS
5	PIETRO FIORENTINI SPA	ITALY
6	RMG REGEL+MESSTECHNIK GMBH	GERMANY
21.0	**PRESSURE GAUGES (MR NO.X100)**	
1	AN INSTRUMENTS PVT LTD	INDIA
2	BADOTHERM PROCESS INSTRUMENTS B.V.	NETHERLANDS
3	BOURDON HAENNI S.A	FRANCE
4	BRITISH ROTOTHERM CO.LTD	U.K.
5	BUDENBERG GAUGE CO. LTD.	U.K.
6	DRESSER INC.	U.S.A.
7	FORBES MARSHALL (HYD) PVT. LTD	INDIA
8	GENERAL INSTRUMENTS CONSORTIUM	INDIA
9	GLUCK (INDIA) MFG.CO	INDIA
10	H GURU INSTRUMENTS(SOUTH INDIA)PVT. LTD	INDIA
11	MANOMETER (INDIA) PVT. LTD.	INDIA
12	NAGANO KEIKI SEISAKUSHO LTD	JAPAN
13	PRECISION INDUSTRIES	INDIA
14	WAAREE INSTRUMENTS LIMITED	INDIA
15	WALCHANDNAGAR INDUSTRIES LTD(TIWAC DIVN)	INDIA
16	WIKA ALEXANDER WIEGAND & CO GMBH	GERMANY
17	WIKA INSTRUMENTS INDIA PVT LTD	INDIA
22.0	**PRESSURE RELIEF VALVE (MR NO. X-360)**	
1	ANDERSON GREENWOOD CROSBY	U.S.A.
2	BHEL (TRICHY)	INDIA
3	CURTISS WRIGHT FLOW CONTROL CORPORATION USA,CANADA/UK	
4	DRESSER INC.	U.S.A.
5	FUKUI SEISAKUSHO CO LTD	JAPAN

SL NO	ITEM / VENDORS	COUNTRY
6	INSTRUMENTATION LTD. (PALGHAT)	INDIA
7	LESER GMBH & CO. KG	GERMANY
8	NAKAKITA SEISAKUSHO CO LTD	JAPAN
9	NUOVO PIGNONE SPA (ITALY) (GE OILCO.)	ITALY
10	PARCOL SPA	ITALY
11	SAFETY SYSTEMS UK LTD	U.K.
12	SEBIM VALVES INDIA PVT LTD	INDIA
13	TAI MILANO SPA	ITALY
14	TYCO SANMAR LTD INDIA	INDIA
15	WEIR VALVES & CONTROLS FRANCE(FORM S791)	FRANCE
23.0	**PROCESS STREAM ANALYSER (ELECTROCHEM-O2)**	
1	ABB AUTOMATION LTD	U.K.
2	ABB LTD-BANGALORE INDIA	INDIA
3	EMERSON PROCES MGMT ASIA PACIFIC PTE LTD	SINGAPORE
4	EMERSON PROCESS MANAGEMENT INDIA PVT LTD INDIA	INDIA
5	SERVOMEX PLC	U.K.
6	TELEDYNE ANALYTICAL INSTRUMENTS	U.S.A.
24.0	**PROCESS STREAM ANALYSER (H.C.-TCD/FID)**	
1	ABB AUTOMATION LTD	U.K.
2	ABB LTD-BANGALORE INDIA	INDIA
3	EMERSON PROCES MGMT ASIA PACIFIC PTE LTD	SINGAPORE
4	EMERSON PROCESS MANAGEMENT INDIA PVT LTD	INDIA
5	TELEDYNE ANALYTICAL INSTRUMENTS	U.S.A.
25.0	**PROCESS STREAM ANALYSER (HYDROGEN-TCD)**	
1	ABB AUTOMATION LTD	U.K.
2	ABB LTD-BANGALORE	INDIA
3	EMERSON PROCES MGMT ASIA PACIFIC PTE LTD	SINGAPORE
4	EMERSON PROCESS MANAGEMENT INDIA PVT LTD	INDIA
5	HORIBA INSTRUMENTS (S) PTE LTD	SINGAPORE
6	PANAMETRICS LTD	IRELAND
7	SIEMENS AG	GERMANY
8	TELEDYNE ANALYTICAL INSTRUMENTS	U.S.A.
26.0	**PROCESS STREAM ANALYSER (IR/UV)**	
1	ABB AUTOMATION LTD	U.K.
2	ABB LTD-BANGALORE	INDIA
3	EMERSON PROCES MGMT ASIA PACIFIC PTE LTD	SINGAPORE
4	EMERSON PROCESS MANAGEMENT INDIA PVT LTD	INDIA
5	HAMILTON SUNDSTRAND CORPORATION	U.S.A.
6	HORIBA INSTRUMENTS (S) PTE LTD	SINGAPORE

SL NO	ITEM / VENDORS	COUNTRY
7	SERVOMEX PLC	U.K.
8	SICK MAIHAK	GERMANY
9	SIEMENS AG	GERMANY
10	SIGNAL GROUP LTD	ENGLAND
11	TELEDYNE ANALYTICAL INSTRUMENTS	U.S.A.
12	YOKOGAWA ELECTRIC CORPORATION	JAPAN
13	YOKOGAWA INDIA LIMITED	INDIA
27.0	**PROCESS STREAM ANALYSER (PARAMAGNETIC-O2)**	
1	ABB AUTOMATION LTD	U.K.
2	ABB LTD-BANGALORE INDIA	INDIA
3	EMERSON PROCES MGMT ASIA PACIFIC PTE LTD	SINGAPORE
4	EMERSON PROCESS MANAGEMENT INDIA PVT LTD INDIA	INDIA
5	HORIBA INSTRUMENTS (S) PTE LTD	SINGAPORE
6	PANAMETRICS LTD	IRELAND
7	SERVOMEX PLC	U.K.
8	SICK MAIHAK	GERMANY
9	SIEMENS AG	GERMANY
10	TELEDYNE ANALYTICAL INSTRUMENTS	U.S.A.
11	YOKOGAWA ELECTRIC CORPORATION	JAPAN
12	YOKOGAWA INDIA LIMITED	INDIA
28.0	**PROCESS STREAM ANALYSER- MOISTURE/ DEW PT**	
1	AMETEK	U.S.A.
2	PANAMETRICS LTD	IRELAND
3	SERVOMEX PLC	U.K.
4	TELEDYNE ANALYTICAL INSTRUMENTS	U.S.A.
29.0	**PROCESS STREAM ANALYSERS (O2-ZIRCONIA)**	
1	ABB AUTOMATION LTD	U.K
2	ABB LTD-BANGALORE	INDIA
3	AMETEK	U.S.A
4	EMERSON PROCES MGMT ASIA PACIFIC PTE LTD	SINGAPORE
5	EMERSON PROCESS MANAGEMENT INDIA PVT LTD	INDIA
6	INSTRUMENTATION LTD	INDIA
7	PANAMETRICS LTD	IRELAND
8	SECO CONTROLS PVT LTD	INDIA
9	SERVOMEX PLC	U.K
10	SIEMENS AG	GERMANY
11	SYSTECH INSTRUMENTS	U.K
12	TELEDYNE ANALYTICAL INSTRUMENTS	U.S.A
13	YOKOGAWA ELECTRIC CORPORATION	JAPAN

SL NO	ITEM / VENDORS	COUNTRY
14	YOKOGAWA INDIA LIMITED INDIA	INDIA
30.0	**PRODUCT QUALITY ANALYSER (SULPHUR)**	
1	ABB AUTOMATION LTD U.K.	U.K.
2	ABB LTD-BANGALORE	INDIA
3	BARTON INSTRUMENT SYSTEMS LTD	U.S.A.
4	GALVANIC APPLIED SCIENCES INC.	CANADA
5	HAMILTON SUNDSTRAND CORPORATION	U.S.A.
6	PAC ANTEK LP	U.S.A.
7	SICK MAIHAK	GERMANY
8	THERMO ELECTRON CORPORATION	U.S.A.
31.0	**PRODUCT QUALITY ANALYSER SYSTEMS**	
1	ABB AUTOMATION LTD	U.K.
2	ABB LTD-BANGALORE	INDIA
3	FORNEY CORPORATION	U.S.A.
4	HAMILTON SUNDSTRAND CORPORATION	U.S.A.
5	THERMO ELECTRON CORPORATION	U.S.A.
6	YOKOGAWA ELECTRIC CORPORATION	JAPAN
7	YOKOGAWA INDIA LIMITED	INDIA
32.0	**PRODUCT QUALITY ANALYSERS (DENSITY)**	
1	BOPP & REUTHER MESSTECHNIK GMBH	GERMANY
2	EMERSON PROCES MGMT ASIA PACIFIC PTE LTD	SINGAPORE
3	EMERSON PROCESS MANAGEMENT INDIA PVT LTD	INDIA
4	ENDRESS + HAUSER GMBH & COMPANY	GERMANY
5	HAMILTON SUNDSTRAND CORPORATION	U.S.A.
6	MOBREY LTD (FORM. S-578)	ENGLAND
7	THERMO ELECTRON CORPORATION	U.S.A.
8	YOKOGAWA ELECTRIC CORPORATION	JAPAN
9	YOKOGAWA INDIA LIMITED	INDIA
33.0	**PRODUCT QUALITY ANALYSERS (DISTILLATION)**	
1	ABB AUTOMATION LTD	U.K.
2	ABB LTD-BANGALORE	INDIA
3	HAMILTON SUNDSTRAND CORPORATION	U.S.A.
4	PAC ANTEK LP	U.S.A.
34.0	**PRODUCT QUALITY ANALYSERS (FLASH POINT)**	
1	ABB AUTOMATION LTD	U.K.
2	ABB LTD-BANGALORE	INDIA
3	EMERSON PROCES MGMT ASIA PACIFIC PTE LTD	SINGAPORE
4	EMERSON PROCESS MANAGEMENT INDIA PVT LTD	INDIA
5	HAMILTON SUNDSTRAND CORPORATION	U.S.A.
6	PAC ANTEK LP	U.S.A.

SL NO	ITEM / VENDORS	COUNTRY
7	THERMO ELECTRON CORPORATION	U.S.A.
35.0	**PRODUCT QUALITY ANALYSERS (NIR)**	
1	ABB AUTOMATION LTD	U.K.
2	ABB LTD-BANGALORE	INDIA
3	HAMILTON SUNDSTRAND CORPORATION	U.S.A.
4	THERMO ELECTRON CORPORATION	U.S.A.
5	YOKOGAWA ELECTRIC CORPORATION	JAPAN
6	YOKOGAWA INDIA LIMITED	INDIA
36.0	**PRODUCT QUALITY ANALYSERS (VISCOCITY)**	
1	ABB AUTOMATION LTD	U.K.
2	ABB LTD-BANGALORE	INDIA
3	PAC ANTEK LP	U.S.A.
4	THERMO ELECTRON CORPORATION	U.S.A.
37.0	**PROGRAMMABLE LOGIC CONTROLLERS**	
1	ABB LTD (BANGALORE)	INDIA
2	ASEA BROWN BOVERY LIMITED	SWITZERLAND
3	GE FANUC AUTOMATION NORTH AMERICA INC.	U.S.A
4	GE FANUC SYSTEMS PVT LTD	INDIA
5	HIMA PAUL HILDEBRANDT GMBH + CO KG	GERMANY
6	HONEYWELL AUTOMATION INDIA LTD-FORM.T115	INDIA
7	HONEYWELL INC.	U.S.A
8	ICS TRIPLEX	U.K
9	INVENSYS SOFTWARE SYSTEMS (S) PTE LTD	SINGAPORE
10	LARSEN & TOUBRO LTD INDIA	INDIA
11	ROCKWELL AUTOMATION INC	U.S.A
12	ROCKWELL AUTOMATION INDIA LTD	INDIA
13	SCHNEIDER ELECTRIC INDIA PVT LTD	INDIA
14	SIEMENS AG	GERMANY
15	SIEMENS LIMITED INDIA	INDIA
38.0	**SAFETY VALVES BOILER SERVICE(MR NO.X460)**	
1	ANDERSON GREENWOOD CROSBY	U.S.A.
2	BHEL (TRICHY) INDIA	INDIA
3	CURTISS WRIGHT FLOW CONTROL CORPORATION	USA, CANADA/UK
4	DRESSER INC.	U.S.A.
5	FUKUI SEISAKUSHO CO LTD	JAPAN
6	INSTRUMENTATION LTD. (PALGHAT)	INDIA
7	PARCOL SPA	ITALY
8	TYCO SANMAR LTD	INDIA
39.0	**SELF ACTUATED FLOW CONTROL VALVES**	
1	WA KATES COMPANY	U.S.A.

SL NO	ITEM / VENDORS	COUNTRY
40.0	**SELF ACTUATED PR.CONTROL VALVE MR NO.X340**	
1	DANIEL MEASURMNT & CONTROL ASIA PACIFIC	U.S.A
2	DRESSER PRODUITS INDUSTRIELS	FRANCE
3	DRESSER VALVE INDIA PVT LTD	
4	ELSTER-INSTROMET NV-FORMER. I563	BELGIUM
5	EMERSON PROCES MGMT ASIA PACIFIC PTE LTD	SINGAPORE
6	ESME VALVES LTD.	U.K
7	FISHER SANMAR LIMITED	INDIA
8	GORTER CONTROLS B.V.	NETHERLANDS
9	KAYE & MACDONALD INC.	U.S.A
10	NIRMAL INDUSTRIAL CONTROL PVT. LTD	INDIA
11	NUOVO PIGNONE SPA (ITALY) (GE OILCO.)	ITALY
12	PIETRO FIORENTINI SPA	ITALY
13	RICHARDS INDUSTRIES (FORMERLY TRELOAR)	U.S.A
14	RMG REGEL+MESSTECHNIK GMBH	GERMANY
15	SAMSON AG MESS-UND REGELTECHNIK GERMANY	GERMANY
41.0	**SIGNAL CABLES (MR NO.X750)**	
1	ASSOCIATED CABLES PVT LTD	INDIA
2	ASSOCIATED FLEXIBLES AND WIRES [P] LTD	INDIA
3	CMI LIMITED	INDIA
4	CORDS CABLE INDUSTRIES LTD	INDIA
5	DELTON CABLES LIMITED	INDIA
6	ELKAY TELELINKS LTD.	INDIA
7	FINE CORE CABLES PVT LTD.	INDIA
8	GOYOLENE FIBRES (INDIA) PVT LTD	INDIA
9	K E I INDUSTRIES LIMITED	INDIA
10	NICCO CORPORATION LTD	INDIA
11	PARAMOUNT COMMUNICATIONS LIMITED	INDIA
12	POLYCAB WIRES PVT LTD	INDIA
13	RADIANT CABLES PVT LTD	INDIA
14	RELIANCE ENGINEERS LIMITED	INDIA
15	SUYOG ELECTRICALS LTD INDIA	INDIA
16	THERMO CABLES LTD (FORM. T-150)	INDIA
17	UNIVERSAL CABLES LTD	INDIA
42.0	**SKIN THERMOCOUPLES (MR NO.X430)**	
1	ABB AUTOMATION LTD	U.K
2	DAILY THERMETRICS	U.S.A
3	DETRIV INSTRUMENTATION & ELECTRONICS LTD	INDIA
4	GAYESCO LLC	U.S.A
5	GENERAL INSTRUMENTS CONSORTIUM	INDIA

SL NO	ITEM / VENDORS	COUNTRY
6	JAPAN THERMOWELL CO LTD	JAPAN
7	NAGMAN SENSORS PVT LTD	INDIA
8	PYRO-ELECTRIC INSTRUMENTS GOA PVT LTD	INDIA
9	THERMO ELECTRIC CO. INC.	U.S.A
10	THERMO-COUPLE PRODUCTS CO	U.S.A
11	THERMO-ELECTRA B.V	NETHERLANDS
12	TM TECNOMATIC SPA	ITALY
43.0	**SOLENOID VALVES (MR NO.X390)**	
1	ALCON ALEXANDER CONTROLS LIMITED	U.K
2	ASCO (INDIA) LIMITED	INDIA
3	ASCO JOUCOMATIC LTD	U.S.A
4	ASCO JOUCOMATIC SA	FRANCE
5	AVCON CONTROLS PVT. LTD.	INDIA
6	HERION WERKE	GERMANY
7	PRECISION INSTRUMENT COMPANY	INDIA
8	ROTEX AUTOMATION LTD.	INDIA
9	SCHRADER DUNCAN LIMITED	INDIA
10	VERSA BV	NETHERLANDS
44.0	**SP CONTROL VALVES (ECC. DISC HI PERF)**	
1	DRESSER PRODUITS INDUSTRIELS	
2	DRESSER VALVE INDIA PVT LTD	INDIA
3	EMERSON PROCES MGMT ASIA PACIFIC PTE LTD	SINGAPORE
4	FLOWSERVE PTE LTD	INDIA
5	ITALVALV S.N.C	ITALY
6	METSO AUTOMATION PTE LTD(FORMERLY NELES)	U.K.
7	MOTOYAMA ENGG WORKS LTD	JAPAN
8	NUOVO PIGNONE SPA (ITALY) (GE OILCO.)	ITALY
9	SAMSON AG MESS-UND REGELTECHNIK	GERMANY
10	SPX VALVES & CONTROLS (FORMERLY DEZURIK)	U.S.A.
11	WEIR VALVES & CONTROLS UK LTD	U.K.
45.0	**SPECIAL CONTROL VALVES (AXIAL)**	
1	CONTROL COMPONENTS INC.	U.S.A.
2	MOKVELD VALVES BV	NETHERLANDS
46.0	**SPECIAL CONTROL VALVES (BALL CONTROL)**	
1	TALVALV S.N.C	ITALY
2	KITAMURA VALVE MANUFACTURING CO LTD	JAPAN
3	METSO AUTOMATION PTE LTD(FORMERLY NELES)	U.K.
4	MOTOYAMA ENGG WORKS LTD	JAPAN
5	SPX VALVES & CONTROLS (FORMERLY DEZURIK)	U.S.A.
47.0	**SPECIAL CONTROL VALVES (BUTTERFLY)**	

SL NO	ITEM / VENDORS	COUNTRY
1	DRESSER PRODUITS INDUSTRIELS	FRANCE
2	DRESSER VALVE INDIA PVT LTD	INDIA
3	EMERSON PROCES MGMT ASIA PACIFIC PTE LTD	SINGAPORE
4	FLOWSERVE PTE LTD	SINGAPORE
5	ITALVALV S.N.C	ITALY
6	METSO AUTOMATION PTE LTD(FORMERLY NELES)	U.K.
7	MOTOYAMA ENGG WORKS LTD	JAPAN
8	NUOVO PIGNONE SPA (ITALY) (GE OILCO.)	ITALY
9	SAMSON AG MESS-UND REGELTECHNIK	GERMANY
10	SPX VALVES & CONTROLS (FORMERLY DEZURIK)	U.S.A.
11	WEIR VALVES & CONTROLS UK LTD	U.K.
48.0	**SPECIAL CONTROL VALVES (LOW CV)**	
1	DRESSER PRODUITS INDUSTRIELS	FRANCE
2	DRESSER VALVE INDIA PVT LTD	INDIA
3	EMERSON PROCES MGMT ASIA PACIFIC PTE LTD	SINGAPORE
4	FLOWSERVE PTE LTD	INDIA
5	SAMSON AG MESS-UND REGELTECHNIK	GERMANY
49.0	**SPECIAL CONTROL VALVES (MR -X350)**	
1	DRESSER PRODUITS INDUSTRIELS	FRANCE
2	DRESSER VALVE INDIA PVT LTD INDIA	INDIA
3	EMERSON PROCES MGMT ASIA PACIFIC PTE LTD	SINGAPORE
4	FLOWSERVE PTE LTD	SINGAPORE
5	ITALVALV S.N.C	ITALY
6	KITAMURA VALVE MANUFACTURING CO LTD	JAPAN
7	METSO AUTOMATION PTE LTD(FORMERLY NELES)	U.K.
8	MOTOYAMA ENGG WORKS LTD	JAPAN
9	NUOVO PIGNONE SPA (ITALY) (GE OILCO.)	ITALY
10	SAMSON AG MESS-UND REGELTECHNIK	GERMANY
11	SPX VALVES & CONTROLS (FORMERLY DEZURIK)	U.S.A.
12	WEIR VALVES & CONTROLS UK LTD	U.K.
50.0	**SPECIAL CONTROL VALVES (PLUG)**	
1	EMERSON PROCES MGMT ASIA PACIFIC PTE LTD	SINGAPORE
51.0	**SPECIAL CONTROL VALVES (ROTARY PLUG)**	
1	DRESSER PRODUITS INDUSTRIELS	FRANCE
2	DRESSER VALVE INDIA PVT LTD	INDIA
3	FLOWSERVE PTE LTD	SINGAPORE
4	METSO AUTOMATION PTE LTD(FORMERLY NELES)	U.K
5	SAMSON AG MESS-UND REGELTECHNIK	GERMANY
52.0	**SPECIAL CONTROL VALVES (SEGMENTAL)**	
1	DRESSER PRODUITS INDUSTRIELS	FRANCE

SL NO	ITEM / VENDORS	COUNTRY
2	DRESSER VALVE INDIA PVT LTD	INDIA
3	EMERSON PROCES MGMT ASIA PACIFIC PTE LTD	SINGAPORE
4	FLOWSERVE PTE LTD	SINGAPORE
5	ITALVALV S.N.C	ITALY
6	KITAMURA VALVE MANUFACTURING CO LTD	JAPAN
7	KOSO FLUID CONTROLS (PVT) LTD	INDIA
8	METSO AUTOMATION PTE LTD(FORMERLY NELES)	U.K
9	9 SAMSON AG MESS-UND REGELTECHNIK	GERMANY
10	SPX VALVES & CONTROLS (FORMERLY DEZURIK)	U.S.A
53.0	**SPECIAL CONTROL VALVES (VARIABLE CV)**	
1	DRESSER PRODUITS INDUSTRIELS	FRANCE
2	DRESSER VALVE INDIA PVT LTD	INDIA
54.0	**SPECIAL LEVEL INSTRUMENTS (TUNNING FORK)**	
1	AMETEK DREXELBROOK	U.S.A.
2	ENDRESS + HAUSER GMBH & COMPANY	GERMANY
3	K-TEK CORPORATION	U.S.A.
4	MOBREY LTD (FORM. S-578)	ENGLAND
5	NIVO CONTROLS PVT LTD	INDIA
6	VEGA GRIESHABER KG GMBH	GERMANY
7	VENTURE MEASUREMENT COMPANY	U.S.A.
55.0	**SPECIAL TEMPERATURE ELEMENTS**	
1	ABB AUTOMATION LTD	U.K
2	DAILY THERMETRICS	USA
3	GAYESCO LLC	USA
4	GENERAL INSTRUMENTS CONSORTIUM	INDIA
5	JAPAN THERMOWELL CO LTD	JAPAN
6	PYRO-ELECTRIC INSTRUMENTS GOA PVT LTD	INDIA
7	THERMO ELECTRIC CO. INC.	U.S.A
8	THERMO-COUPLE PRODUCTS CO	U.S.A
9	THERMO-ELECTRA B.V	NETHERLANDS
10	TM TECNOMATIC SPA	ITALY
56.0	**STACK GAS ANALYSER SYSTEMS (INSITU)**	
1	CHEMTROLS ENGINEERING LTD	INDIA
2	FORNEY CORPORATION	U.S.A
3	HORIBA INSTRUMENTS (S) PTE LTD	SINGAPORE
4	SERVOMEX PLC	U.K
5	SIEMENS AG	GERMANY
57.0	**STACK GAS ANALYSER SYSTEMS (EXTRACTIVE)**	
1	ABB AUTOMATION LTD	U.K.
2	ABB LTD-BANGALORE	INDIA

SL NO	ITEM / VENDORS	COUNTRY
3	CHEMTROLS ENGINEERING LTD	INDIA
4	EMERSON PROCES MGMT ASIA PACIFIC PTE LTD	SINGAPORE
5	EMERSON PROCESS MANAGEMENT INDIA PVT LTD	INDIA
6	ENVIRONMENT S.A.	FRANCE
7	FORNEY CORPORATION	U.S.A.
8	HORIBA INSTRUMENTS (S) PTE LTD	SINGAPORE
9	SERES	FRANCE
10	SERVOMEX PLC	U.K.
11	SICK MAIHAK	GERMANY
12	SIGNAL GROUP LTD	ENGLAND
13	TELEDYNE ANALYTICAL INSTRUMENTS	U.S.A.
14	THERMO ELECTRON CORPORATION-	U.S.A.
15	YOKOGAWA ELECTRIC CORPORATION	JAPAN
16	YOKOGAWA INDIA LIMITED	INDIA
58.0	**STACK GAS ANALYSERS (O2-ZIRCONIA)**	
1	ABB AUTOMATION LTD	U.K
2	ABB LTD-BANGALORE	INDIA
3	AMETEK	U.S.A
4	EMERSON PROCES MGMT ASIA PACIFIC PTE LTD	SINGAPORE
5	EMERSON PROCESS MANAGEMENT INDIA PVT LTD	INDIA
6	PANAMETRICS LTD	IRELAND
7	SERVOMEX PLC	U.K
8	SIEMENS AG	GERMANY
9	SYSTECH INSTRUMENTS	U.K
10	TELEDYNE ANALYTICAL INSTRUMENTS	U.S.A
11	YOKOGAWA ELECTRIC CORPORATION	JAPAN
12	YOKOGAWA INDIA LIMITED	INDIA
59.0	**STACK GAS ANALYSERS (SPM)**	
1	ENVIRONMENT S.A	FRANCE
2	FORNEY CORPORATION	U.S.A
3	HORIBA INSTRUMENTS (S) PTE LTD	SINGAPORE
4	SERVOMEX PLC	U.K
5	SIEMENS AG	GERMANY
6	TELEDYNE ANALYTICAL INSTRUMENTS	U.S.A
7	YOKOGAWA ELECTRIC CORPORATION	JAPAN
8	YOKOGAWA INDIA LIMITED	INDIA
60.0	**SURGE RELIEF VALVE**	
1	COOPER CAMERON VALV ITALY SRL-FRM D659	ITALY
2	DANIEL MEASURMNT & CONTROL ASIA PACIFIC	U.S.A
3	MOKVELD VALVES BV	NETHERLANDS

SL NO	ITEM / VENDORS	COUNTRY
61.0	**TANK PR. PROTECT. DEVICES / FLAME ARRSTR**	
1	ANDERSON GREENWOOD CROSBY	U.S.A.
2	ANDERSON GREENWOOD VAREC	U.S.A.
3	BRAUNSCHWEIGER FLAMMENFILTER	GERMANY
4	CORPORATION WIN	KOREA
5	GROTH EQUIPMENT PTE LTD	U.S.A.
6	L & J TECHNOLOGIES	U.S.A.
7	PROTEGO EQUIPMENT PVT LTD	INDIA
8	SAFETY SYSTEMS UK LTD	U.K.
62.0	**TEMP.ELEMENTS,THERMOWELLS (MR NO.X410)**	
1	ABB AUTOMATION LTD	U.K.
2	ALTOP INDUSTRIES LTD.	INDIA
3	BOURDON HAENNI S.A	FRANCE
4	DAILY THERMETRICS	USA
5	DETRIV INSTRUMENTATION & ELECTRONICS LTD	INDIA
6	GAYESCO LLC	USA
7	GENERAL INSTRUMENTS CONSORTIUM	INDIA
8	INVENSYS SOFTWARE SYSTEMS (S) PTE LTD	SINGAPORE
9	JAPAN THERMOWELL CO LTD	JAPAN
10	NAGMAN SENSORS PVT LTD	INDIA
11	PYRO-ELECTRIC INSTRUMENTS GOA PVT LTD	INDIA
12	TEMP-TECH	INDIA
13	TEMPSEN INSTRUMENT INDIA LTD INDIA	INDIA
14	THERMO ELECTRIC CO. INC.	U.S.A.
15	THERMO-COUPLE PRODUCTS CO	U.S.A.
16	THERMO-ELECTRA B.V	NETHERLANDS
17	TM TECNOMATIC SPA	ITALY
18	WIKA ALEXANDER WIEGAND & CO GMBH	GERMANY
63.0	**TEMP.GAUGES (BI METALLIC,FILLED SYSTEM)**	
1	AN INSTRUMENTS PVT LTD	INDIA
2	BADOTHERM PROCESS INSTRUMENTS B.V.	NETHERLANDS
3	BOURDON HAENNI S.A	FRANCE
4	DRESSER INC.	U.S.A.
5	GENERAL INSTRUMENTS CONSORTIUM	INDIA
6	H GURU INSTRUMENTS(SOUTH INDIA)PVT. LTD	INDIA
7	NAGANO KEIKI SEISAKUSHO LTD	JAPAN
8	PYRO-ELECTRIC INSTRUMENTS GOA PVT LTD	INDIA
9	SOLARTRON ISA	U.K.
10	WALCHANDNAGAR INDUSTRIES LTD(TIWAC DIVN)	INDIA
11	WIKA ALEXANDER WIEGAND & CO GMBH	GERMANY

SL NO	ITEM / VENDORS	COUNTRY
12	WIKA INSTRUMENTS INDIA PVT LTD	INDIA
64.0	**TOXIC GAS DETECTION SYSTEM (REFER 15 IA)**	
1	CROWCON DETECTION INSTRUMENTS LTD	U.K.
2	DETECTION INSTRUMENTS (I) PVT. LTD.	INDIA
3	DETECTOR ELECTRONICS CORPORATION	U.S.A.
4	DRAGER SAFETY AG & CO. KGAA	GERMANY
5	HONEYWELL ANALYTICS (FORM. Z-512)	U.K.
6	MINE SAFETY APPLIANCES COMPANY	U.S.A.
7	OLDHAM FRANCE S.A.	FRANCE
8	SIMRAD OPTRONICS ICARE (FORM. I-556)	FRANCE
65.0	**VARIABLE AREA FLOW METERS(I,T)MR NO.X020**	
1	ABB AUTOMATION LTD	U.K.
2	ALFLOW GLASS EQUIPMENTS	INDIA
3	ASA SPA	ITALY
4	EMERSON PROCES MGMT ASIA PACIFIC PTE LTD	SINGAPORE
5	EUREKA INDUSTRIAL EQUIPMENTS (P) LTD.	INDIA
6	HEINRICHS MESSTECHNIK GMBH	GERMANY
7	INSTRUMENTATION ENGINEERS PVT. LTD.	INDIA
8	KROHNE MARSHALL PVT. LTD	INDIA
9	KROHNE MESSTECHNIK GMBH & CO KG	GERMANY
10	PLACKA INSTRUMENTS INDIA P LTD	INDIA
11	ROTA YOKOGAWA GMBH & CO. KG	GERMANY
12	TOKYO KEISO CO LTD	JAPAN
13	TRANSDUCERS AND CONTROLS PVT LTD	INDIA
66.0	**WATER QUALITY ANALYSER SYSTEMS**	
1	ABB LTD (FARIDABAD)	INDIA
2	ABB AUTOMATION LTD	U.K.
3	EMERSON PROCES MGMT ASIA PACIFIC PTE LTD	SINGAPORE
4	EMERSON PROCESS MANAGEMENT INDIA PVT LTD INDIA	INDIA
5	ENDRESS + HAUSER GMBH & COMPANY	GERMANY
6	FORBES POLYMETRON PVT LTD.	INDIA
7	HONEYWELL AUTOMATION INDIA LTD-FORM.T115	INDIA
8	HONEYWELL INC.	U.S.A.
9	SERES	FRANCE
10	YOKOGAWA ELECTRIC CORPORATION	JAPAN
11	YOKOGAWA INDIA LIMITED	INDIA
67.0	**WATER QUALITY ANALYSER- DISSOLVED OXYGEN**	
1	ABB LTD (FARIDABAD)	INDIA
2	ABB AUTOMATION LTD	U.K.

SL NO	ITEM / VENDORS	COUNTRY
3	EMERSON PROCES MGMT ASIA PACIFIC PTE LTD	SINGAPORE
4	EMERSON PROCESS MANAGEMENT INDIA PVT LTD	INDIA
5	ENDRESS + HAUSER GMBH & COMPANY	GERMANY
6	FORBES POLYMETRON PVT LTD.	INDIA
7	HONEYWELL INC.	U.S.A.
8	INVENSYS SOFTWARE SYSTEMS (S) PTE LTD	SINGAPORE
9	YOKOGAWA ELECTRIC CORPORATION	JAPAN
10	YOKOGAWA INDIA LIMITED	INDIA
68.0	**WATER QUALITY ANALYSER- OIL IN H20 DISLVD**	
1	BRISTOL BABCOCK LTD	AUSTRALIA
2	TELEDYNE ANALYTICAL INSTRUMENTS	U.S.A.
69.0	**WATER QUALITY ANALYSER- OIL IN H20 TOC/TC**	
1	ARJAY ENGINEERING LTD	CANADA
2	FORBES POLYMETRON PVT LTD.	INDIA
3	ERES	FRANCE
4	THERMO ELECTRON CORPORATION	U.S.A.
70.0	**WATER QUALITY ANALYSERS (CONDUCTIVITY)**	
1	ABB LTD (FARIDABAD)	INDIA
2	ABB AUTOMATION LTD	U.K.
3	EMERSON PROCES MGMT ASIA PACIFIC PTE LTD	SINGAPORE
4	EMERSON PROCESS MANAGEMENT INDIA PVT LTD	INDIA
5	ENDRESS + HAUSER GMBH & COMPANY	GERMANY
6	ENDRESS+HAUSER (I) PVT. LTD.	INDIA
7	FORBES POLYMETRON PVT LTD.	INDIA
8	HONEYWELL AUTOMATION INDIA LTD-FORM.T115	INDIA
9	HONEYWELL INC.	U.S.A.
10	INVENSYS INDIA PRIVATE LIMITED	INDIA
11	INVENSYS SOFTWARE SYSTEMS (S) PTE LTD	SINGAPORE
12	YOKOGAWA ELECTRIC CORPORATION	JAPAN
13	YOKOGAWA INDIA LIMITED	INDIA
71.0	**WATER QUALITY ANALYSERS (PH)**	
1	ABB LTD (FARIDABAD)	INDIA
2	ABB AUTOMATION LTD	U.K.
3	EMERSON PROCES MGMT ASIA PACIFIC PTE LTD	SINGAPORE
4	EMERSON PROCESS MANAGEMENT INDIA PVT LTD INDIA	INDIA
5	ENDRESS + HAUSER GMBH & COMPANY	GERMANY
6	ENDRESS+HAUSER (I) PVT. LTD	INDIA
7	FORBES POLYMETRON PVT LTD.	INDIA
8	HONEYWELL AUTOMATION INDIA LTD-FORM.T115	INDIA

SL NO	ITEM / VENDORS	COUNTRY
9	HONEYWELL INC.	U.S.A.
10	INVENSYS INDIA PRIVATE LIMITED	INDIA
11	INVENSYS SOFTWARE SYSTEMS (S) PTE LTD	SINGAPORE
12	SERES	FRANCE
13	YOKOGAWA ELECTRIC CORPORATION	JAPAN
14	YOKOGAWA INDIA LIMITED	INDIA
72.0	**WATER QUALITY ANALYSERS (SILICA)**	
1	ENDRESS + HAUSER GMBH & COMPANY	GERMANY
2	FORBES POLYMETRON PVT LTD.	INDIA
3	HONEYWELL INC.	U.S.A.
4	SERES	FRANCE
5	YOKOGAWA ELECTRIC CORPORATION	JAPAN
6	YOKOGAWA INDIA LIMITED	INDIA
73.0	**WATER QUALITY ANALYSERS (TURBIDITY)**	
1	ABB LTD (FARIDABAD)	INDIA
2	ABB AUTOMATION LTD	U.K.
3	EMERSON PROCES MGMT ASIA PACIFIC PTE LTD	SINGAPORE
4	EMERSON PROCESS MANAGEMENT INDIA PVT LTD INDIA	INDIA
5	ENDRESS + HAUSER GMBH & COMPANY	GERMANY
6	FORBES POLYMETRON PVT LTD. INDIA	INDIA
7	SERES	FRANCE
8	YOKOGAWA ELECTRIC CORPORATION	JAPAN
9	YOKOGAWA INDIA LIMITED	INDIA
74.0	**WATER QUALITY ANALYSERS (CHLORINE)**	
1	ABB LTD (FARIDABAD)	INDIA
2	ABB AUTOMATION LTD	U.K.
3	EMERSON PROCES MGMT ASIA PACIFIC PTE LTD	SINGAPORE
4	EMERSON PROCESS MANAGEMENT INDIA PVT LTD	INDIA
5	ENDRESS + HAUSER GMBH & COMPANY	GERMANY
6	SERES	FRANCE
7	YOKOGAWA LECTRIC CORPORATION	JAPAN
8	YOKOGAWA INDIA LIMITED INDIA	INDIA
INSTRUMENTATION - II		
1.0	**ALARM ANNUNCIATORS**	
1	DIGICONT	INDIA
2	ELECTRONIC CORPORATION OF INDIA LTD.	INDIA
3	IDEC IZUMI CORPORATION	JAPAN
4	INSTALARM INSTRUMENTS PVT LTD.	INDIA
5	INSTRUMENTATION LTD	INDIA

SL NO	ITEM / VENDORS	COUNTRY
6	MINILEC (INDIA) PVT LTD	INDIA
7	PROCON INSTRUMENTATION PVT LTD	INDIA
8	RONAN ENGINEERING COMPANY	U.S.A.
2.0	**ANALYSER (AIR DEMAND)**	
1	AMETEK	U.S.A
3.0	**ANALYSERS (DENSITY /SPECIFIC GRAVITY)**	
1	BERTHOLD TECHNOLOGIES GMBH & CO.KG	GERMANY
2	BOPP & REUTHER MESSTECHNIK GMBH	GERMANY
3	EMERSON PROCES MGMT ASIA PACIFIC PTE LTD	SINGAPORE
4	EMERSON PROCESS MANAGEMENT INDIA PVT LTD	INDIA
5	ENDRESS + HAUSER GMBH & COMPANY	GERMANY
6	ENDRESS+HAUSER (I) PVT. LTD	INDIA
7	KROHNE MESSTECHNIK GMBH & CO KG	GERMANY
8	MOBREY LTD (FORM. S-578)	ENGLAND
9	OHMART/VEGA CORPORATION	U.S.A.
10	RONAN ENGINEERING COMPANY	U.S.A.
11	THERMO ELECTRON CORPORATION	U.S.A.
12	YOKOGAWA ELECTRIC CORPORATION	JAPAN
13	YOKOGAWA INDIA LIMITED	INDIA
4.0	**ANALYSERS (HYDROGEN SULPHIDE)**	
1	AMETEK	U.S.A.
2	SICK MAIHAK	GERMANY
3	THERMO ELECTRON CORPORATION	U.S.A.
5.0	**AVERAGING PITOT TUBES (MR NO.X040)**	
1	EMERSON PROCES MGMT ASIA PACIFIC PTE LTD	SINGAPORE
2	EMERSON PROCESS MANAGEMENT INDIA PVT LTD	INDIA
3	MIDWEST INSTRUMENT	U.S.A.
4	STAR-MECH CONTROLS (INDIA) PVT LTD	INDIA
5	THERMO BRANDT INSTRUMENTS	U.S.A.
6	TM TECNOMATIC SPA	ITALY
7	TORBAR FLOWMETERS LTD	U.K.
8	VERIS INC.	U.S.A.
6.0	**CLOSED CIRCUIT TV (MR NO.X540)**	
1	ELECTRONIC CORPORATION OF INDIA LTD.	INDIA
2	NELCO LTD	INDIA
3	PHILIPS INDIA LTD	INDIA
7.0	**CONTROL PANEL & ACCESSORIES**	
1	ACCUSONIC CONTROLS PVT LTD	INDIA
2	ELECTRONIC CORPORATION OF INDIA LTD.	INDIA
3	ELECTRONIC INSTRUMENTATION AND CONTROL	INDIA

SL NO	ITEM / VENDORS	COUNTRY
4	INDUSTRIAL CONTROLS & APPLIANCES PVT LTD	INDIA
5	INSTRUMENTATION LTD	INDIA
6	KERALA STATE ELECT DEV CORP LTD (AROOR)	INDIA
7	POSITRONICS PVT LTD	INDIA
8	PRIMA AUTOMATION INDIA PVT LTD	INDIA
9	PYROTECH ELECTRONICS PVT LTD	INDIA
10	RADHA KRISHNA CONTROLS	INDIA
8.0	**DRUM LEVEL INSTRUMENTS (BI-COLOUR GAUGE)**	
1	JERGUSON GAUGE & VALVE	U.S.A..
2	KLINGER FLUID CONTROL GMBH (FORM.R551)	AUSTRIA
3	LEVELSTATE SYSTEMS LTD	U.K
4	NARVIK - YARWAY B.V	NETHERLANDS
5	NIHON KLINGAGE CO LTD	JAPAN
6	YARWAY CORPORATION	U.S.A.
9.0	**DRUM LEVEL INSTRUMENTS (ELECTRONIC)**	
1	LEVELSTATE SYSTEMS LTD	U.K.
2	MOBREY LTD (FORM. S-578)	ENGLAND
3	NARVIK - YARWAY B.V	NETHERLANDS
4	YARWAY CORPORATION	U.S.A.
10.0	**FIELD INSTRUMENTS (P,DP,F,L,T) MR NO.X300**	
1	ABB LTD (FARIDABAD)	INDIA
2	ABB AUTOMATION LTD	U.K.
3	EMERSON PROCES MGMT ASIA PACIFIC PTE LTD	SINGAPORE
4	EMERSON PROCESS MANAGEMENT INDIA PVT LTD INDIA	INDIA
5	FUJI ELECTRIC SYSTEMS CO. LTD	JAPAN
6	HONEYWELL AUTOMATION INDIA LTD-FORM.T115	INDIA
7	HONEYWELL INC.	U.S.A.
8	YOKOGAWA ELECTRIC CORPORATION	JAPAN
9	YOKOGAWA INDIA LIMITED	INDIA
11.0	**GAUGE GLASSES & COCKS (MR NO. X260)**	
1	ASIAN INDUSTRIAL VALVES & INSTRUMENTS	INDIA
2	BLISS ANAND PVT LTD	INDIA
3	CHEMTROLS ENGINEERING LTD	INDIA
4	JERGUSON GAUGE & VALVE	U.S.A.
5	KLINGER FLUID CONTROL GMBH (FORM.R551)	AUSTRIA
6	LEVCON INSTRUMENTS PVT LTD	INDIA
7	NIHON KLINGAGE CO LTD	JAPAN
8	PENBERTHY INC	U.S.A.
9	PHOENIX SYSTEMLEMENTE UND MESSTECHNIK	GERMANY

SL NO	ITEM / VENDORS	COUNTRY
10	PRATOLINA INSTRUMENTS PVT LTD	INDIA
11	PUNE TECHTROL PVT LTD	INDIA
12	R.K. DUTT CONCERNS	INDIA
13	SIGMA INSTRUMENTS CO	INDIA
14	TECNOMATIC INDIA PVT LTD	INDIA
12.0	**I/P CONVERTERS**	
1	ABB LTD (FARIDABAD)	INDIA
2	ABB AUTOMATION LTD	U.K.
3	EMERSON PROCES MGMT ASIA PACIFIC PTE LTD	SINGAPORE
4	EMERSON PROCESS MANAGEMENT INDIA PVT LTD	INDIA
5	IMI WATSON SMITH LTD	U.K.
6	MOORE CONTROLS LTD	INDIA
7	MTL INDIA	INDIA
8	SHREYAS INSTRUMENTS PVT LTD	INDIA
9	THERMO BRANDT INSTRUMENTS	U.S.A.
13.0	**INFRARED TEMP MEASUREMENT SYSTEM**	
1	WAHL INSTRUMENTS INC.	U.S.A.
14.0	**LOADING SYSTEM**	
1	ABB AUTOMATION LTD	U.K.
2	DANIEL MEASUREMENT & CONTROL (I) PVT LTD	INDIA
3	DANIEL MEASURMNT & CONTROL ASIA PACIFIC	U.S.A.
4	FMC MEASUREMENT SOLUTIONS	U.S.A.
15.0	**MAGNETIC FLOW METERS (MR NO.X050)**	
1	ABB AUTOMATION LTD.	U.K
2	EMERSON PROCES MGMT ASIA PACIFIC PTE LTD	SINGAPORE
3	EMERSON PROCESS MANAGEMENT INDIA PVT LTD	INDIA
4	ENDRESS + HAUSER GMBH & COMPANY	GERMANY
5	ENDRESS+HAUSER (I) PVT. LTD. INDIA	INDIA
6	HEINRICHS MESSTECHNIK GMBH	GERMANY
7	INSTRUMENTATION ENGINEERS PVT. LTD.	INDIA
8	INVENSYS SOFTWARE SYSTEMS (S) PTE LTD	SINGAPORE
9	KROHNE MARSHALL PVT. LTD	INDIA
10	KROHNE MESSTECHNIK GMBH & CO KG	GERMANY
11	TOKYO KEISO CO LTD	JAPAN
12	YAMATAKE CORPORATION LTD	JAPAN
13	YOKOGAWA ELECTRIC CORPORATION	JAPAN
16.0	**MAGNETIC LEVEL INSTRUMENTS**	
1	ASIAN INDUSTRIAL VALVES & INSTRUMENTS	INDIA
2	BLISS ANAND PVT LTD	INDIA
3	CHEMTROLS ENGINEERING LTD	INDIA

SL NO	ITEM / VENDORS	COUNTRY
4	K-TEK CORPORATION	U.S..A
5	KLINGER FLUID CONTROL GMBH (FORM.R551)	AUSTRIA
6	KROHNE MESSTECHNIK GMBH & CO KG	GERMANY
7	KSR KUEBLER NIVEAUMESS-TECHNIK AG	GERMANY
8	LEVCON INSTRUMENTS PVT LTD	INDIA
9	MAGNETROL INTERNATIONAL N.V	BELGIUM
10	NIHON KLINGAGE CO LTD	JAPAN
11	PHOENIX SYSTEMLEMENTE UND MESSTECHNIK	GERMANY
12	PRATOLINA INSTRUMENTS PVT LTD	INDIA
13	TECNOMATIC INDIA PVT LTD	INDIA
14	V AUTOMAT & INSTRUMENTS PVT LTD	INDIA
17.0	**MASS FLOW METERS (MR NO.X060)**	
1	BRONKHORST HIGH TECH BV	NETHERLANDS
2	EMERSON PROCES MGMT ASIA PACIFIC PTE LTD	SINGAPORE
3	EMERSON PROCESS MANAGEMENT INDIA PVT LTD	INDIA
4	ENDRESS + HAUSER GMBH & COMPANY	GERMANY
5	ENDRESS+HAUSER (I) PVT. LTD. INDIA	INDIA
6	FLUID COMPONENTS INC	U.S.A.
7	FMC MEASUREMENT SOLUTIONS	U.S.A.
8	FOX THERMAL INSTRUMENT INC.	U.S.A.
9	HEINRICHS MESSTECHNIK GMBH	GERMANY
10	KROHNE MESSTECHNIK GMBH & CO KG	GERMANY
11	KURZ INSTRUMENTS INC	U.S.A.
12	MAGNETROL INTERNATIONAL N.V	BELGIUM
13	RHEONIK MESSGERATE GMBH	GERMANY
14	TOKYO KEISO CO LTD	JAPAN
18.0	**NUCLEONIC LEVEL INSTRUMENTS**	
1	BERTHOLD TECHNOLOGIES GMBH & CO.KG	GERMANY
2	ENDRESS + HAUSER GMBH & COMPANY	GERMANY
3	KROHNE MESSTECHNIK GMBH & CO KG	GERMANY
4	OHMART/VEGA CORPORATION	U.S.A.
5	RONAN ENGINEERING COMPANY	U.S.A.
6	THERMO ELECTRON CORPORATION	U.S.A.
19.0	**POSITIVE DISPLACEMENT METERS (MR NO.X010)**	
1	BARTON INSTRUMENT SYSTEMS LTD .	U.S.A.
2	BOPP & REUTHER MESSTECHNIK GMBH	GERMANY
3	FMC MEASUREMENT SOLUTIONS	U.S.A.
4	MC TECHNOLOGIES SANMAR LIMITED	INDIA
5	LIQUID CONTROL INDIA PVT. LTD	INDIA
6	OVAL CORPORATION	JAPAN

SL NO	ITEM / VENDORS	COUNTRY
7	PETROL INSTRUMENTS SRL	ITALY
8	TELTECH INSTRUMENTATION PVT.LTD.	INDIA
20.0	**PRESSURE SWITCHES (MR NO.X120)**	
1	ASCO JOUCOMATIC LTD	U.S.A.
2	BETA BV	NETHERLANDS
3	BOURDON HAENNI S.A	FRANCE
4	DAG PROCESS INSTRUMENTS	INDIA
5	DELTA CONTROLS LTD	U.K.
6	DRESSER INC.	U.S.A.
7	GENERAL INSTRUMENTS CONSORTIUM INDIA	INDIA
8	INDFOS INDUSTRIES LIMITED INDIA	INDIA
9	NAGANO KEIKI SEISAKUSHO LTD	JAPAN
10	PYROPRESS ENGG CO LTD	U.K.
11	REGULATEURS GEORGIN S.A	FRANCE
12	ROBERTSHAW CONTROLS CO	U.S.A.
13	SIRCO CONTROLS LIMITED	U.K.
14	SOR INC.	U.S.A.
15	SWITZER INSTRUMENT LTD INDIA	INDIA
16	UNITED ELECTRIC CONTROLS CO	U.S.A.
21.0	**RECEIVER INSTRUMENTS (MR NO.X530)**	
1	ABB LTD (FARIDABAD)	INDIA
2	SIEMENS LIMITED	INDIA
3	YOKOGAWA INDIA LIMITED	INDIA
22.0	**RUPTURE DISCS (MR NO. X370)**	
1	BS & B SAFETY SYSTEMS (INDIA) LTD	INDIA
2	BS&B SAFETY SYSTEMS INC	U.S.A.
3	ELFAB HUGHES LTD	U.K
4	FIKE EUROPE N.V.	BELGIUM
5	OKLAHOMA SAFETY EQUIPMENTS CO. INC.	SINGAPORE
6	REMBE GMBH SAFETY+CONTROL	GERMANY
7	SAFETY SYSTEMS UK LTD (MARSTON DIVN)	U.K.
23.0	**SPECIAL LEVEL INSTRUMENTS (CAP.& COND.)**	
1	AMETEK DREXELBROOK	U.S.A.
2	ENDRESS + HAUSER GMBH & COMPANY	GERMANY
3	LEVELSTATE SYSTEMS LTD	U.K.
4	MAGNETROL INTERNATIONAL N.V	BELGIUM
5	MOBREY LTD (FORM. S-578)	ENGLAND
6	NARVIK - YARWAY B.V	NETHERLANDS
7	SBEM PVT LTD	INDIA
8	TRANSDUCERS AND CONTROLS PVT LTD	INDIA

SL NO	ITEM / VENDORS	COUNTRY
9	VEGA GRIESHABER KG GMBH	GERMANY
10	VENTURE MEASUREMENT COMPANY	U.S.A.
11	YARWAY CORPORATION	U.S.A.
24.0	**SPECIAL LEVEL INSTRUMENTS (RF TYPE)**	
1	AMETEK DREXELBROOK	U.S.A.
2	ENDRESS + HAUSER GMBH & COMPANY	GERMANY
3	K-TEK CORPORATION	U.S.A
4	MAGNETROL INTERNATIONAL N.V	BELGIUM
5	MOBREY LTD (FORM. S-578)	ENGLAND
25.0	**SPEED TANSMITTERS**	
1	ASEA BROWN BOVERY LIMITED	SWITZERLAND
2	HANS TURCK GMBH & CO. KG	GERMANY
3	JAPAN SERVO CO LTD	JAPAN
4	PEPPERL + FUCHS GMBH	GERMANY
26.0	**SPL. LEVEL INSTRUMENTS-GUIDED WAVE RADAR**	
1	EMERSON PROCESS MANAGEMENT INDIA PVT LTD INDIA	INDIA
2	ENDRESS + HAUSER GMBH & COMPANY	GERMANY
3	K-TEK CORPORATION	U.S.A.
4	KROHNE MESSTECHNIK GMBH & CO KG	GERMANY
5	L & J TECHNOLOGIES	U.S.A.
6	MAGNETROL INTERNATIONAL N.V	BELGIUM
7	TOKYO KEISO CO LTD	JAPAN
27.0	**TANK FARM MANAGEMENT SYSTEM (MR NO.X820)**	
1	ENDRESS + HAUSER GMBH & COMPANY	GERMANY
2	ENRAF B.V	NETHERLANDS
3	L & J TECHNOLOGIES	U.S.A.
4	SAAB ROSEMOUNT TANK RADAR AB	SWEDEN
5	SBEM PVT LTD	INDIA
6	TOKYO KEISO CO LTD	JAPAN
7	VEGA GRIESHABER KG GMBH	GERMANY
28.0	**TANK LEVEL INSTRUMENT (RADAR,ULTRASONIC)**	
1	AMETEK DREXELBROOK	U.S.A.
2	EMERSON PROCESS MANAGEMENT INDIA PVT LTD	INDIA
3	ENDRESS + HAUSER GMBH & COMPANY	GERMANY
4	ENRAF B.V	NETHERLANDS
5	HAWK MEASUREMENT SYSTEM PTY LTD	AUSTRALIA
6	KROHNE MESSTECHNIK GMBH & CO KG	GERMANY
7	L & J TECHNOLOGIES	U.S.A.
8	MAGNETROL INTERNATIONAL N.V	BELGIUM

SL NO	ITEM / VENDORS	COUNTRY
9	MOBREY LTD (FORM. S-578)	ENGLAND
10	SAAB ROSEMOUNT TANK RADAR AB	SWEDEN
11	SIEMENS AG	GERMANY
12	VEGA GRIESHABER KG GMBH	GERMANY
29.0	**TANK LEVEL INSTRUMENT (SERVO TYPE)**	
1	ENDRESS + HAUSER GMBH & COMPANY	GERMANY
2	ENRAF B.V	NETHERLANDS
3	L & J TECHNOLOGIES	U.S.A.
4	SBEM PVT LTD	INDIA
5	TOKYO KEISO CO LTD	JAPAN
30.0	**TANK LEVEL INSTRUMENTS (FLOAT OPERATED)**	
1	ENDRESS+HAUSER JAPAN CO. LTD(FORM S-522)	JAPAN
2	ENRAF B.V	NETHERLANDS
3	L & J TECHNOLOGIES	U.S.A.
4	NIVO CONTROLS PVT LTD	INDIA
5	SBEM PVT LTD	INDIA
6	SIGMA INSTRUMENTS CO	INDIA
7	TOKYO KEISO CO LTD	JAPAN
31.0	**TARGET**	FLOWMETERS
1	INVENSYS SOFTWARE SYSTEMS (S) PTE LTD	SINGAPORE
32.0	**TEMPERATURE RECORDERS**	
1	ABB AUTOMATION LTD	U.K.
2	HONEYWELL INC	U.S.A
3	INVENSYS SOFTWARE SYSTEMS (S) PTE LTD	SINGAPORE
4	YAMATAKE CORPORATION LTD	JAPAN
5	YOKOGAWA ELECTRIC CORPORATION	JAPAN
6	YOKOGAWA INDIA LTD.	INDIA
33.0	**TURBINE FLOW METERS (MR NO. X030)**	
1	ABB AUTOMATION LTD	U.K.
2	BARTON INSTRUMENT SYSTEMS LTD	U.S.A.
3	BOPP & REUTHER MESSTECHNIK GMBH	GERMANY
4	DANIEL MEASURMNT & CONTROL ASIA PACIFIC	U.S.A.
5	ELSTER-INSTROMET NV-FORMER. I563	BELGIUM
6	FAURE HERMAN GROUP INTERTECHNIQUE	FRANCE
7	FMC MEASUREMENT SOLUTIONS	U.S.A.
8	FMC TECHNOLOGIES SANMAR LIMITED	INDIA
9	HOFFER FLOW CONTROLS INC	U.S.A.
10	RMG REGEL+MESSTECHNIK GMBH	GERMANY
11	ROCKWIN FLOWMETER INDIA (P) LTD	INDIA
12	SENSUS METERING SYSTEMS INC (FORM. I589)	U.S.A.

SL NO	ITEM / VENDORS	COUNTRY
13	THERMO ELECTRON CORPORATION	U.S.A.
34.0	**ULTRASONIC FLOW METER**	
1	DANIEL MEASUREMENT& CONTROL (I) PVT LTD	INDIA
2	DANIEL MEASURMNT & CONTROL ASIA PACIFIC	U.S.A
3	ELSTER-INSTROMET NV-FORMER. I563	BELGIUM
4	ENDRESS + HAUSER GMBH & COMPANY	GERMANY
5	FMC MEASUREMENT SOLUTIONS-UK	U.K.
6	KROHNE MESSTECHNIK GMBH & CO KG	GERMANY
7	PANAMETRICS LTD	IRELAND
8	RMG REGEL+MESSTECHNIK GMBH	GERMANY
9	SICK MAIHAK	GERMANY
10	SIEMENS AG	GERMANY
11	THERMO ELECTRON CORPORATION	U.S.A.
12	TOKYO KEISO CO LTD	JAPAN
35.0	**VISCOSITY METER**	
1	MOBREY LTD (FORM. S-578)	ENGLAND
36.0	**VORTEX FLOW METER**	
1	ABB AUTOMATION LTD	U.K.
2	BOPP & REUTHER MESSTECHNIK GMBH	GERMANY
3	EMERSON PROCES MGMT ASIA PACIFIC PTE LTD	SINGAPORE
4	EMERSON PROCESS MANAGEMENT INDIA PVT LTD	INDIA
5	ENDRESS + HAUSER GMBH & COMPANY	GERMANY
6	ENDRESS+HAUSER (I) PVT. LTD.	INDIA
7	KROHNE MARSHALL PVT. LTD	INDIA
8	KROHNE MESSTECHNIK GMBH & CO KG	GERMANY
9	OVAL CORPORATION	JAPAN
10	RMG REGEL+MESSTECHNIK GMBH	GERMANY
11	TOKYO KEISO CO LTD	JAPAN
12	YOKOGAWA ELECTRIC CORPORATION	JAPAN
INSTRUMENTATION - III		
1.0	**DISPLACER LEVEL INSTRUMENTS**	
1	CHEMTROLS ENGINEERING LTD	INDIA
2	DRESSER PRODUITS INDUSTRIELS	FRANCE
3	DRESSER VALVE INDIA PVT LTD	INDIA
4	EMERSON PROCES MGMT ASIA PACIFIC PTE LTD	SINGAPORE
5	FISHER SANMAR LIMITED	INDIA
6	FOXBORO ECKARDT GMBH	GERMANY
7	MIL CONTROLS LIMITED	INDIA
8	PARCOL SPA	ITALY
9	TOKYO KEISO CO LTD	JAPAN

SL NO	ITEM / VENDORS	COUNTRY
10	V AUTOMAT & INSTRUMENTS PVT LTD	INDIA
11	YAMATAKE CORPORATION LTD	JAPAN
2.0	**DISTRIBUTED CONTROL SYSTEM (MR NO. X500**	
1	ABB AUTOMATION LTD	U.K.
2	ABB LTD (BANGALORE)	INDIA
3	BHEL (BANGALORE)	INDIA
4	EMERSON PROCES MGMT ASIA PACIFIC PTE LTD	SINGAPORE
5	EMERSON PROCESS MANAGEMENT INDIA PVT LTD	INDIA
6	HONEYWELL AUTOMATION INDIA LTD-FORM.T115	INDIA
7	HONEYWELL INC.	U.S.A.
8	INVENSYS INDIA PRIVATE LIMITED	INDIA
9	INVENSYS SOFTWARE SYSTEMS (S) PTE LTD	SINGAPORE
10	SIEMENS AG	GERMANY
11	YAMATAKE CORPORATION LTD	JAPAN
12	YOKOGAWA ELECTRIC CORPORATION	JAPAN
13	YOKOGAWA INDIA LIMITED	INDIA
3.0	**GAS METERING SYSTEM (TURBINE)**	
1	DANIEL MEASUREMENT& CONTROL (I) PVT LTD	INDIA
2	DANIEL MEASURMNT & CONTROL ASIA PACIFIC	U.S.A
3	ELSTER-INSTROMET NV-FORMER. I563	BELGIUM
4	RMG REGEL+MESSTECHNIK GMBH	GERMANY
5	ROCKWIN FLOWMETER INDIA (P) LTD	INDIA
6	SENSUS METERING SYSTEMS INC (FORM. I589)	U.S.A.
4.0	**GAS METERING SYSTEM (ULTRASONIC)**	
1	DANIEL MEASUREMENT& CONTROL (I) PVT LTD	INDIA
2	DANIEL MEASURMNT & CONTROL ASIA PACIFIC	U.S.A.
3	ELSTER-INSTROMET NV-FORMER. I563	BELGIUM
4	FMC MEASUREMENT SOLUTIONS-KONGSBERG	NORWAY
5	RMG REGEL+MESSTECHNIK GMBH	GERMANY
5.0	**GAS METERING SYSTEM -DUAL CHAMBR ORIFICE**	
1	DANIEL MEASUREMENT& CONTROL (I) PVT LTD	INDIA
2	DANIEL MEASURMNT & CONTROL ASIA PACIFIC	U.S.A.
3	FMC MEASUREMENT SOLUTIONS-KONGSBERG	NORWAY
6.0	**INTERFACE DEVICES**	
1	CAMILLE BAUER MESSINSTRUMENTE AG	SWITZERLAND
2	HANS TURCK GMBH & CO. KG	GERMANY
3	IFM ELECTRONIC GMBH	GERMANY
4	MTL INDIA	INDIA
5	OSNA ELECTRONICS PVT LTD	INDIA
6	PEPPERL + FUCHS GMBH GERMANY	

SL NO	ITEM / VENDORS	COUNTRY
7	R STAHL SCHALTGERATE GMBH GERMANY	
8	R STAHL PVT LTD INDIA	INDIA
7.0	**LIQUID METERING SYSTEM (P D METERS)**	
1	BARTON INSTRUMENT SYSTEMS LTD	U.S.A.
2	BOPP & REUTHER MESSTECHNIK GMBH	GERMANY
3	FMC MEASUREMENT SOLUTIONS	U.S.A.
4	OVAL CORPORATION	JAPAN
5	PETROL INSTRUMENTS SRL	ITALY
8.0	**LIQUID METERING SYSTEM (TURBINE)**	
1	ABB AUTOMATION LTD	U.K..
2	BARTON INSTRUMENT SYSTEMS LTD	U.S.A.
3	BOPP & REUTHER MESSTECHNIK GMBH	GERMANY
4	DANIEL MEASUREMENT& CONTROL (I) PVT LTD	INDIA
5	DANIEL MEASURMNT & CONTROL ASIA PACIFIC	U.S.A.
6	FAURE HERMAN GROUP INTERTECHNIQUE	FRANCE
7	FMC MEASUREMENT SOLUTIONS	U.S.A.
8	FMC TECHNOLOGIES SANMAR LIMITED	INDIA
9	HOFFER FLOW CONTROLS INC	U.S.A.
10	ROCKWIN FLOWMETER INDIA (P) LTD	INDIA
11	THERMO ELECTRON CORPORATION	U.S.A.
9.0	**LIQUID METERING SYSTEM (ULTRASONIC)**	
1	KROHNE MESSTECHNIK GMBH & CO KG	GERMANY
10.0	**LIQUID METERING SYSTEM -MASS FLOW METERS**	
1	DANIEL MEASURMNT & CONTROL ASIA PACIFIC	U.S.A.
2	ENDRESS + HAUSER GMBH & COMPANY	GERMANY
3	FMC MEASUREMENT SOLUTIONS	U.S.A.
4	HEINRICHS MESSTECHNIK GMBH	GERMANY
5	RHEONIK MESSGERATE GMBH	GERMANY
11.0	**TRAINING SIMULATOR SYSTEM**	
1	TRIDENT COMPUTER RESOURCES	U.S.A.
2	YOKOGAWA ELECTRIC CORPORATION	JAPAN
12.0	**TURNKEY INSTRUMENTATION**	
1	ABB LTD (FARIDABAD)	INDIA
2	ELECTRONIC CORPORATION OF INDIA LTD.	INDIA
3	HONEYWELL AUTOMATION INDIA LTD-FORM.T115	INDIA
4	INSTRUMENTATION LTD	INDIA
5	LARSEN & TOUBRO LTD	INDIA
6	ROCKWELL AUTOMATION INDIA LTD	INDIA
7	SIEMENS LIMITED	INDIA
8	YOKOGAWA INDIA LIMITED	INDIA

SL NO	ITEM / VENDORS	COUNTRY
	CABLE TRAYs	
1	PATNY SYSTEMS PVT. LTD	
2	ERCONCOMPOSITES	
3	ANIL STEELS PVT LTD	
4	INDIANA GRATINGS PVT. LTD.	
5	VINFAB ENGINEERS INDIA PRIVATE	
6	EROS METAL WORKS (P) LTD	
7	RAJASTHAN METAL SMELTING CO.	
8	PREMIER POWER PRODUCTS	
9	INDIA ELECTRICALS SYNDICATE	
10	RATAN PROJECTS & ENGG. CO. PVT. LTD	
11	RABI ENGINEERING WORKS PVT. LTD	
12	RUKMANI ELECTRICAL & COMPONENTS	
13	UNITECH FABRICATORS & ENGINEERS PVT	
14	INDUSTRIAL PERFORATION (I) PVT. LTD	
15	ADVANCE POWER PRODUCTS	
16	SUMIP COMPOSITES PVT. LTD.	
17	SATYAM COMPOSITES PVT LTD	
18	GENERAL COMPOSITES PVT. LTD.	
19	SINTEX	
20	SUMID	
21	METALLUMS	